Rev	Change order	Change: A = Added W = Was D = Deleted	Date	Sign
3	1029251000	D 4100-6704H 4100-3024 A 4101-4623P 4101-4624	070115	SE

För icke direkt toleranssatta mått gäller toleransklass

General tolerances if not other-wise stated

NOM DIM MM		TOL CLASS		
From	To	A	B	C
(1)	6	±0.05	±0.1	±0.2
(6)	30	±0.1	±0.2	±0.5
(30)	100	±0.15	±0.3	±0.8
(100)	300	±0.2	±0.5	±1.2
(300)	1000	±0.3	±0.8	±2

Hål / Holes H13

Skarpa kanter brutna där ej annat anges.
No sharp edges unless otherwise specified.

Övriga generella toleranser enligt ritning 4100-4644.
Additional general tolerances in accordance with drawing 4100-4644.

Tolkmått / Gauge dimensions (mm)		
URTAG NEST	Gåtolk GO	Stopptolk NO GO
5.41	ø5.36	ø5.46
10.90	ø10.85	ø10.95
2.54	ø2.49	ø2.59
1.69	ø1.66	ø1.72

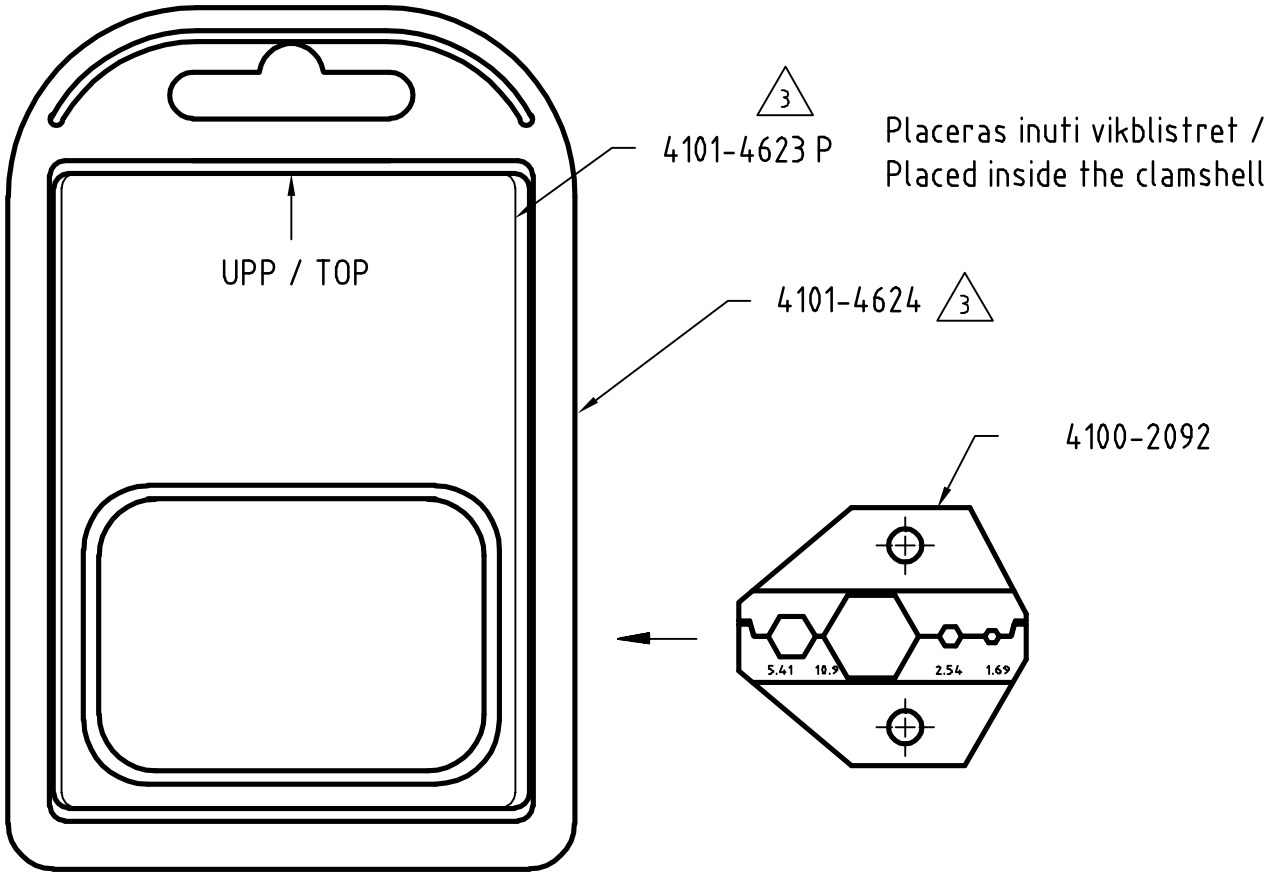

Denna ritning är Pressmaster AB:s egendom. Skyddad av gällande lag.
This drawing is the property of Pressmaster AB. Protected in accordance with prevailing law.

Material	Behandling/Treatment	Status
		Prel.utc.

Konstr/Design	Ritad/Drawn	Datum/Date	Skala/Scale	Kontr/Checked	Godk/Approved	Ämne/Blank
MN	TGW	2007-01-15	1:1			

pressmaster®
ISO 9001 REG NR FM13687

Benämning/Denomination
RESERVDELSSET CCC 2511
SPARE PARTS KCC 2511

Vikt/Weight,gram

Art grp 011

Ritn nr/Drawing no
43001584

REV 003