# DN4034

## Switched-mode power supply 24 V DC

PSU-3AC/24VDC-20A

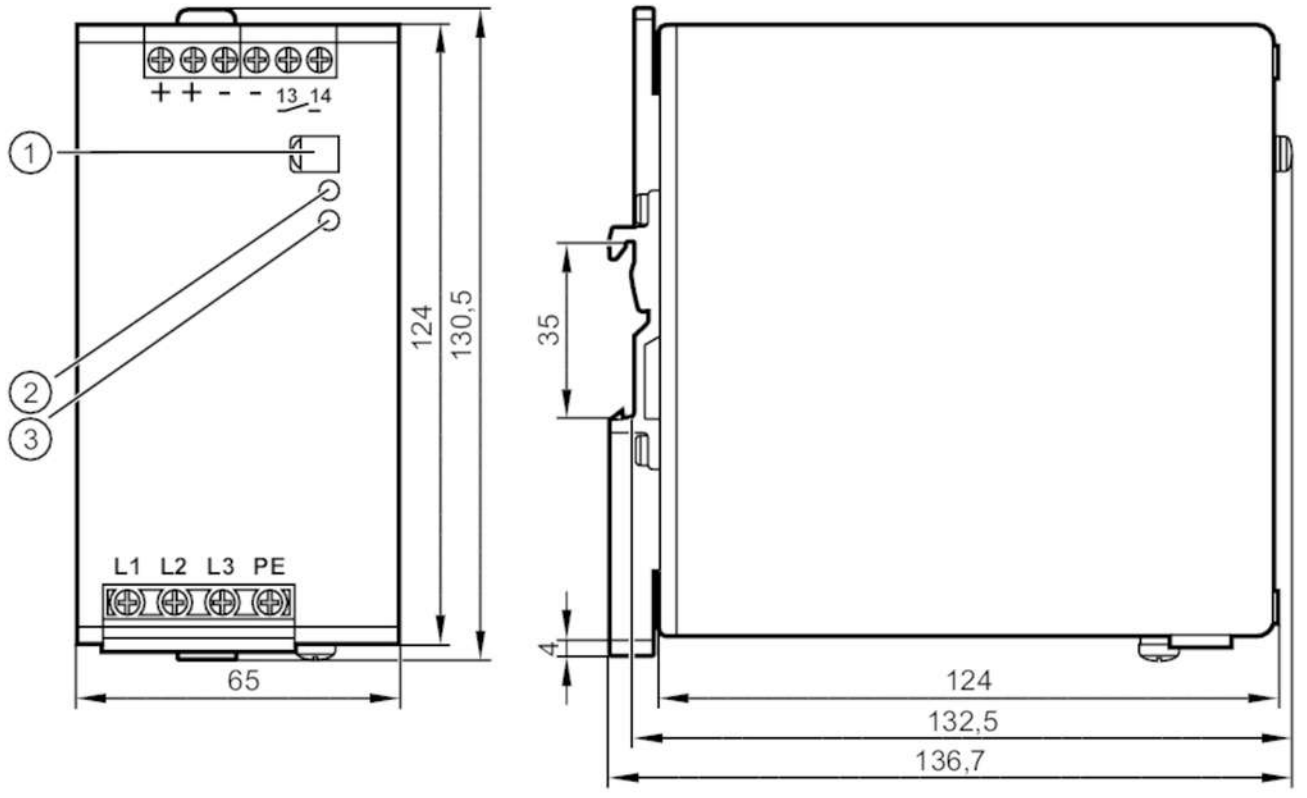


1 potentiometer 24...28 V DC
2 LED DC ok
3 LED Overload

| Electrical data | | |
|---|---|---|
| Frequency AC | [Hz] | 47...64 |
| Operating voltage tolerance | [%] | 15 |
| Nominal voltage AC | [V] | < 400 |
| Input voltage range AC | [V] | 380...480 |
| Output voltage DC | [V] | 24...28 |
| Protection class | | I; (IEC 61140) |
| Overvoltage protection | | yes; (< 35 DC) |
| Output voltage | [V] | adjustable; output voltage to SELV, PELV |
| Max. output current at min. output voltage | [A] | 20 |
| Max. output current at max. output voltage | [A] | 17.5 |
| Max. output current peak at min. output voltage | [A] | 30 |
| Max. output current peak at max. output voltage | [A] | 26 |
| Output power (permanent) | [W] | 480 |
| Output power (peak) | [W] | 720 |
| Note on output power (peak) | [W] | if consumption > 4 s the power is automatically reduced to the output power |

# DN4034

## Switched-mode power supply 24 V DC

PSU-3AC/24VDC-20A

| | | |
|---|---|---|
| Power factor (nominal voltage 400 V AC / 50 Hz) | | 0.94 |
| Note on power factor (nominal voltage 400 V AC / 50 Hz) | | with symmetrical phase voltage |
| Power factor (nominal voltage 480 V AC / 50 Hz) | | 0.95 |
| Note on power factor (nominal voltage 480 V AC / 50 Hz) | | with symmetrical phase voltage |
| Power reserve | [%] | 50 |
| Number of output circuits | | 1 |
| Max. residual ripple | [mV] | 100 |
| Switch-on peak current (nominal voltage 400 V AC / 60 Hz) | [A] | 3 |
| Switch-on peak current (nominal voltage 480 V AC / 50 Hz) | [A] | 3 |
| Inrush current limitation | | yes |
| Efficiency (nominal voltage 400 V AC / 60 Hz) | [%] | 95 |
| Efficiency (nominal voltage 480 V AC / 50 Hz) | [%] | 94.8 |
| External input protection | | ≤ B-6 A / ≤ C-3 A |
| Derating | [W/K] | 12 (60...70 °C) |
| Mains buffering time (nominal voltage 400 V AC / 60 Hz) | [ms] | 22 |
| Mains buffering time (nominal voltage 480 V AC / 50 Hz) | [ms] | 22 |
| Input current (nominal voltage 400 V AC / 60 Hz) | [A] | 0.78 |
| Input current (nominal voltage 480 V AC / 50 Hz) | [A] | 0.64 |
| Power loss (nominal voltage 400 V AC / 60 Hz) | [W] | 25.3 |
| Power loss (nominal voltage 480 V AC / 50 Hz) | [W] | 26.6 |
| Back feeding protection | [V] | 34 |
| **Outputs** | | |
| Short-circuit proof | | yes |
| Overload protection | | yes |
| Overload performance | | output current constant |
| Type DC-OK signal | | relay output |
| Reliability of the DC OK signal | | 60 V DC (0.3 A) / 30 V DC (1 A) / 30 V AC (0.5 A) |
| **Operating conditions** | | |
| Ambient temperature | [°C] | -25...70 |
| Note on ambient temperature | | observe the free space for convection (see operating instructions) |
| Storage temperature | [°C] | -40...85 |
| Max. relative air humidity | [%] | 95;  (IEC 60068-2-30) |

# DN4034

## Switched-mode power supply 24 V DC

PSU-3AC/24VDC-20A

| | | | |
|---|---|---|---|
| Protection | | IP 20; (EN 60529) | |
| Pollution degree | | 2; (IEC 62103: conductive soiling not permitted) | |
| **Tests / approvals** | | | |
| EMC | | EN 61000-6-1 | |
| | | EN 61000-6-2 | |
| | | EN 61000-6-3 | |
| | | EN 61000-6-4 | |
| | | EN 61000-3-2 | Class A |
| Vibration resistance | | IEC 60068-2-6 | ±1,6 mm 2...17,8 Hz / 2 g 17,8...500 Hz |
| Shock resistance | | IEC 60068-2-27 | 30 g 6 ms / 20 g 11 ms |
| Power Factor Correction (PFC) | | met | |
| **Mechanical data** | | | |
| Weight | [g] | 1029 | |
| Housing | | housing for DIN rail mounting | |
| Type of mounting | | mounting on DIN rail; (TH35 (EN 60715)) | |
| Dimensions | [mm] | 124 x 65 x 132.5 | |
| Materials | | steel sheet | |
| **Displays / operating elements** | | | |
| Display | | DC ok | 1 x LED |
| | | overload | 1 x LED |
| **Remarks** | | | |
| Remarks | | Series connection of outputs only applies to identical units up to max. 150 V DC overall voltage | |
| Pack quantity | | 1 pcs. | |
| **Electrical connection** | | | |

screw terminals:

Connection

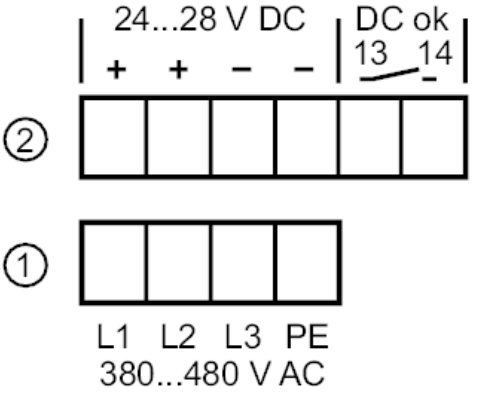


1: primary
2: secondary

# DN4034

## Switched-mode power supply 24 V DC

PSU-3AC/24VDC-20A

## Diagrams and graphs

block diagram

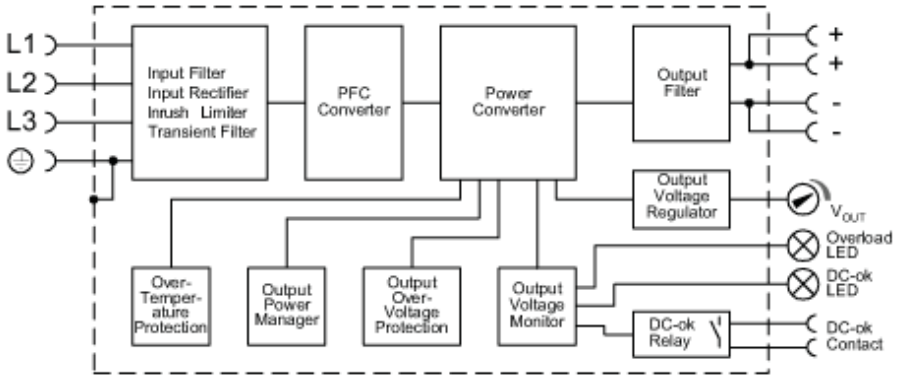


output characteristics

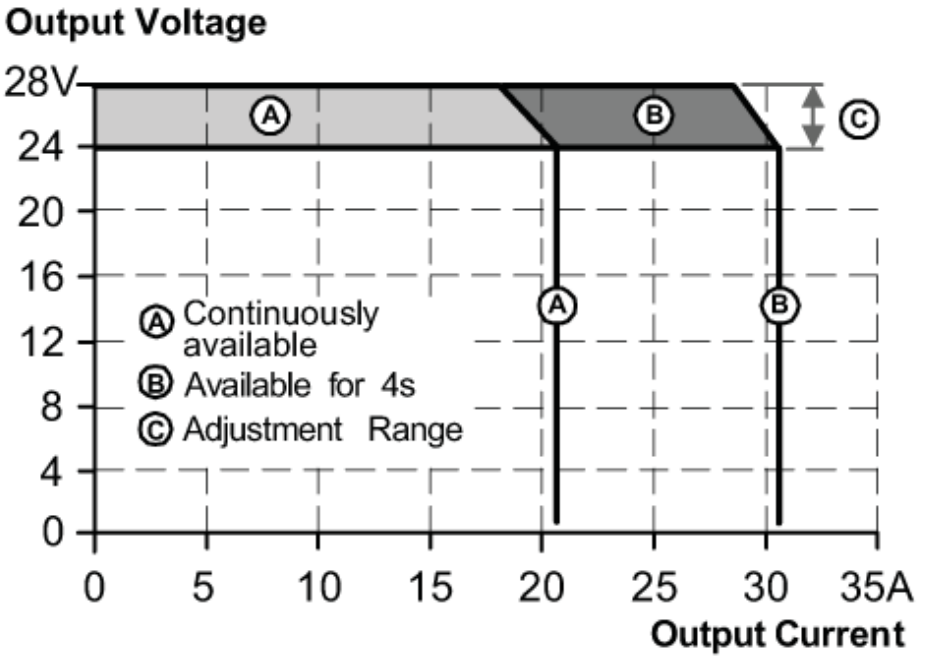

# DN4034

## Switched-mode power supply 24 V DC

PSU-3AC/24VDC-20A

characteristic curve for degree of efficiency / power loss

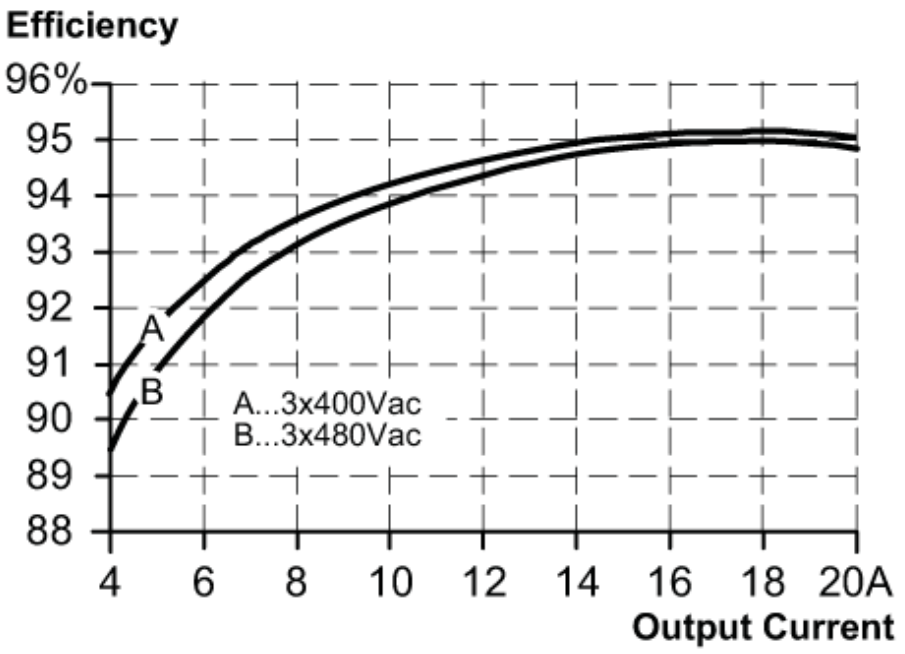


characteristic line for derating

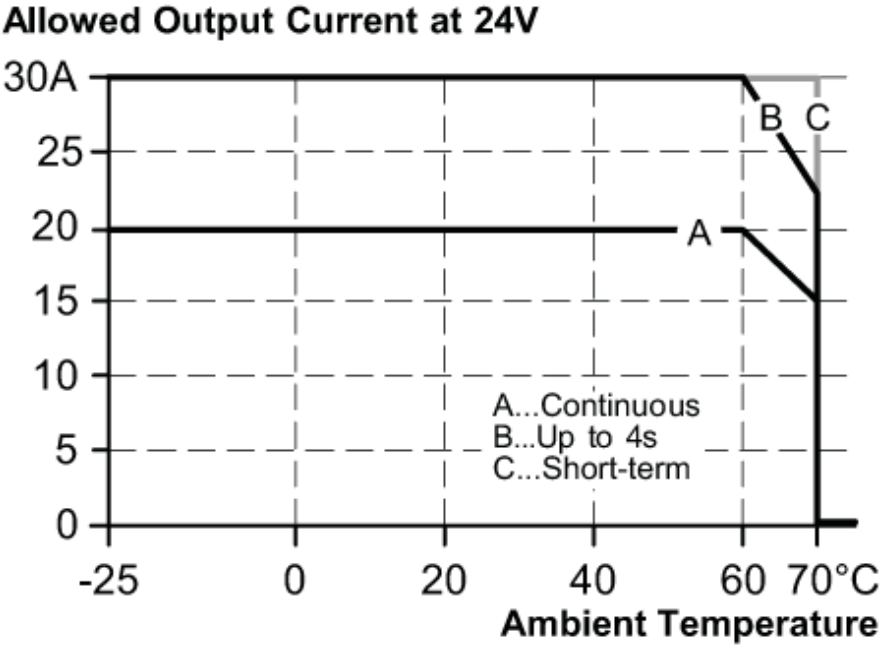

# DN4034

## Switched-mode power supply 24 V DC

PSU-3AC/24VDC-20A

characteristic line for mains buffering time

