TELEDYNE LECROY
Everywhereyoulook™

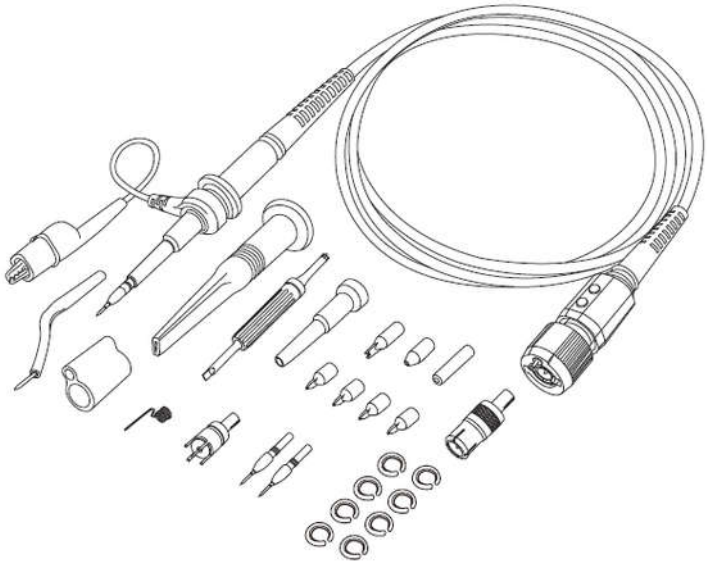

User Manual

PP023

Passive Probe

TELEDYNE LECROY
Everywhereyoulook™
700 Chestnut Ridge Road
Chestnut Ridge, NY, 10977-6499
Tel: (845) 425-2000, Fax: (845) 578 5985
teledynelecroy.com

PP023 Passive Probe Instruction Manual

© 2021 Teledyne LeCroy, Inc. All rights reserved.

Users are permitted to duplicate and distribute Teledyne LeCroy documentation for internal training purposes only. Resale or unauthorized duplication of Teledyne LeCroy documentation materials is strictly prohibited.

Teledyne LeCroy is a registered trademark of Teledyne LeCroy, Inc. Other product or brand names are trademarks or requested trademarks of their respective holders. Information in this publication supersedes all earlier versions. Specifications are subject to change without notice.

933092-00 Rev A
pp023-user-manual.pdf
February, 2021

Terms and Symbols

The following symbols appear on the product or in its documentation:

 WARNING	High Voltage. Risk of electric shock or burn.
 WARNING or CAUTION	Condition or practice could result in injury or loss of life, or damage to equipment.
 DOUBLE INSULATION	
 PROTECTIVE (EARTH) TERMINAL	

Introduction

Teledyne LeCroy PP023 is a passive high impedance voltage oscilloscope probe designed and calibrated for use with general purpose oscilloscopes having an input impedance of 1 MΩ and can be compensated for use with instruments having an input capacitance between 10 and 20 pF. It is compatible with oscilloscopes that automatically detect probe attenuation and adjust their readout accordingly.



To avoid electric shock, keep fingers behind the probe's finger guard during use.



Rated for indoor use only. Do not operate where conductive pollutants may be present.

Specifications

Model	Attn.	Input Imped.		B/W	Rise Time	Length	Compensation Range
		R (MΩ)	C (pF)	(MHz)	(ps)	(m)	(pF)
PP023	10x	10	10	500	700	1.3	10 - 20

Attenuation Ratio ..... 10:1 ± 1%

Max. Input Voltage ..... Circuits not directly connected to Mains: 500 Vrms,
..... 1500 V transient overvoltage
..... Measurement Category II*: 400 Vrms



To reduce risk of fire or electric shock, do not exceed the voltage or category ratings of the probe. See voltage derating curve on p.3.

Pollution Degree ..... Pollution Degree 2*

Operating Altitude ..... Up to 3000 meters

Max. Operating Temp.. 0° C to +50° C

Humidity..... 5% to 95% RH (10 to 30 °C)
..... 5% to 75% RH (30 to 40 °C)
..... 5% to 50% RH (above 40 °C)
..... RH not controlled below 10 °C

* As defined in IEC/EN 61010-031. See definitions below.

Definitions

Measurement Category II (CAT II) refers to measurements performed on circuits directly connected to utilization points (socket outlets and similar) of the low-voltage mains installation.

Pollution Degree 2 refers to an operation environment where normally only dry non-conductive pollution occurs. Temporary conductivity caused by condensation should be expected.

PP023 Input Impedance Profile

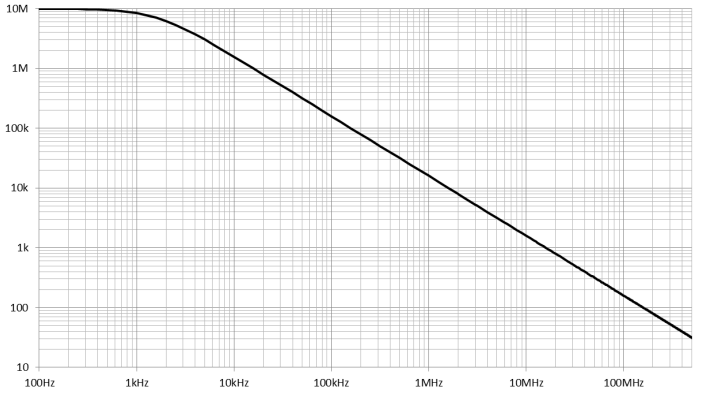

Voltage vs. Frequency Derating Curve

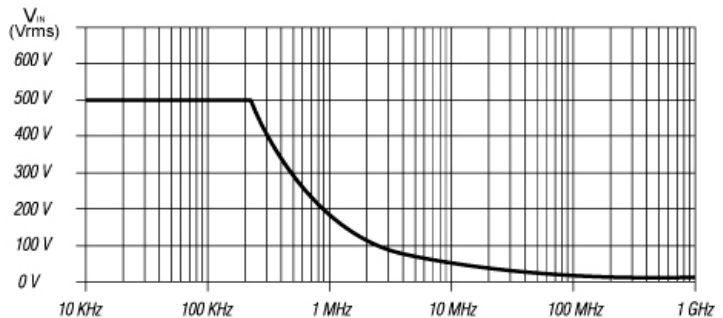

EC Declaration of Conformity

The product conforms to the applicable European Union requirements per Low Voltage Directive (LVD) 2014/35/EU. Compliance was demonstrated to the following specification as listed in the Official Journal of the European Communities:

IEC/EN 61010-031:2015 Safety requirements for electrical equipment for measurement, control and laboratory use – Part 031: Safety requirements for handheld probe assemblies for electrical measurement and test.

EU RoHS2 Compliance

Unless otherwise specified, all materials and processes are compliant with RoHS Directive 2011/65/EU in its entirety, inclusive of any further amendments or modifications of said Directive.

Disposal



The probe complies with the applicable European Union requirements to Directives 2012/19/EU on Waste Electrical and Electronic Equipment (WEEE).

General Safety Information



Observe generally accepted safety procedures in addition to those listed here to avoid personal injury or damage to equipment. The overall safety of any system incorporating this accessory is the responsibility of the assembler of the system.

Connect only to grounded instruments. Use only with compatible Teledyne LeCroy oscilloscopes that have their BNC input connected to an earth ground. Do not connect the probe reference lead to any point which is at a potential other than earth ground.

Connect and disconnect properly. Connect probe to the oscilloscope before connecting it to the test circuit. Disconnect the probe input and reference lead from the test circuit before disconnecting from the oscilloscope. Do not connect/disconnect probes while connected to a voltage source.

Do not overload. Do not apply any potential to the probe leads that exceeds the maximum rating of the probe. Observe all terminal ratings on the oscilloscope before connecting. Consult the oscilloscope product manual for further ratings information.

Always comply with the Voltage vs. Frequency Derating Curve.

Do not remove probe casing. Touching exposed connections may result in electric shock.

Use indoors only within operational environment listed. Do not use in wet or explosive atmospheres. Keep product surfaces clean and dry.

Handle with care. Probe tips are extremely sharp and may puncture skin or cause other bodily injury if not handled properly.

Keep fingers behind the finger guard of probe body and accessories.

Do not operate with suspected failures. Before each use, inspect the probe and accessories for any potential damage such as tears or other defects in the probe body, cable jacket, accessories, etc. If any part is damaged, cease operation immediately and sequester the probe from inadvertent use.

Cleaning

- Clean only the exterior of the probe, cables, and accessories. Use a soft cotton cloth moistened with a mild detergent and water solution. Do not allow any portion of the probe to be submerged at any time.
- Dry the probe and accessory thoroughly before attempting to make any voltage measurement.
- Do not subject the probe to solvents or solvent fumes as these can cause deterioration of the probe body, cables, and accessories.

Service

Refer all repairs to qualified service personnel. Contact Teledyne LeCroy at the following address to arrange to return the probe for service:

Teledyne LeCroy, Inc.
700 Chestnut Ridge Road
Chestnut Ridge, NY, 10977-6499
Ph: 800-553-2769 or 845-425-2000
Fax: 845-578-5985
contact.corp@teledynelecroy.com

For the most complete and up-to-date list of sales and service centers by country, visit teledynelecroy.com/support/contact.

Probe Compensation

Proper compensation of the probe is required to assure amplitude accuracy of the waveform being measured by matching the probe to the oscilloscope's input capacitance. Compensation should be adjusted whenever the probe is connected to or transferred between oscilloscopes.

Low Frequency

1. Apply a 1 kHz square wave to the probe or connect to the oscilloscope's calibrator output.
2. Adjust the single LF trimmer located on the PP023 BNC Compensation Box until you achieve a flat-topped square wave.

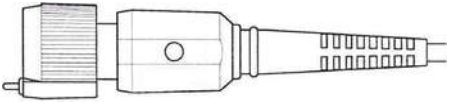

High Frequency

1. Apply a 1 MHz square wave to the probe (< 0.7 ns rise-time).
2. Remove the plastic caps from the two, HF trimmers on the PP023 BNC Compensation Box.
3. Adjust HF2 then HF1 until you achieve a flat-topped square wave.

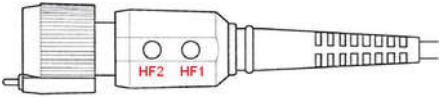

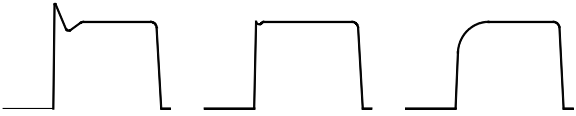

Over-compensated, correct, and under-compensated waveforms

Probe Accessories

Probe Tips

Both the rigid probe tip and the spring tip can be screwed on to the probe body by hand.



Be sure not to overtighten the tips to avoid damaging the threads.

Ground Accessories

The ground lead and the short collar are attached to the probe at the time of shipping. To replace the ground lead with the swivel lead adapter, unscrew the short collar from the probe and remove the ground lead. Replace the short collar to hold the swivel lead adapter in place.

Alternatively, the long collar can be pushed onto the probe body and used in conjunction with the ground spring, BNC adapter or PCB adapter.

Replaceable Parts

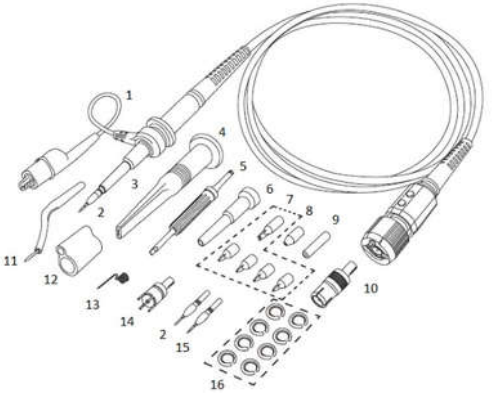

Item	Part Number	Description	QTY
1	PK5-2.5MM-101	Ground Lead with Alligator Clip	1
2	PK5-2.5MM-102	Rigid Probe Tip (1 installed standard)	2
3	PK5-2.5MM-103	Short Collar (installed standard)	1
4	PK5-2.5MM-104	Sprung Hook	1
5	PK5-PK6-001	Trimmer Tool	1
6	PK5-2.5MM-105	Long Collar	1
7	PK5-2.5MM-106	IC Tip Insulators (Black, Brown, Blue, Green, Gray)	5
8	PK5-2.5MM-107	Tip Insulator 2.5mm	1
9	PK5-2.5MM-108	Probe Tip Cover	1
10	PK5-2.5MM-109	BNC Adapter 2.5mm	1
11	PK5-2.5MM-110	Swivel Ground Lead	1
12	PK5-2.5MM-111	Swivel Ground Lead Adapter	1
13	PK5-2.5MM-112	Ground Spring	1
14	PK5-2.5MM-113	PCB Adapter	1
15	PK5-2.5MM-114	Spring Tip	1
16	PK5-PK6-002	Color Coding Rings (2 ea. yellow, red, green, blue)	8

Standard Accessory Replacement Kit part number is PKIT5-2.5MM-101.

Warranty

NOTE: THE WARRANTY BELOW REPLACES ALL OTHER WARRANTIES, EXPRESSED OR IMPLIED, INCLUDING BUT NOT LIMITED TO ANY IMPLIED WARRANTY OF MERCHANTABILITY, FITNESS, OR ADEQUACY FOR ANY PARTICULAR PURPOSE OR USE. TELEDYNE LECROY SHALL NOT BE LIABLE FOR ANY SPECIAL, INCIDENTAL, OR CONSEQUENTIAL DAMAGES, WHETHER IN CONTRACT OR OTHERWISE. THE CUSTOMER IS RESPONSIBLE FOR THE TRANSPORTATION AND INSURANCE CHARGES FOR THE RETURN OF PRODUCTS TO THE SERVICE FACILITY. TELEDYNE LECROY WILL RETURN ALL PRODUCTS UNDER WARRANTY WITH TRANSPORT PREPAID.

Teledyne LeCroy warrants this oscilloscope accessory for normal use and operation within specification for a period of one year from the date of shipment. Spare parts, replacement parts and repairs are warranted for 90 days.

In exercising its warranty, Teledyne LeCroy, at its option, will either repair or replace any assembly returned within the warranty period to the Customer Service Department of an authorized service center. However, this will be done only if the product is determined by Teledyne LeCroy's examination to be defective because of workmanship or materials, and the defect is not caused by misuse, neglect, accident, abnormal conditions of operation; or, damaged by attempted repair or modifications by a non-authorized service facility.

The customer will be responsible for the transportation and insurance charges for the return of products to the service facility. Teledyne LeCroy will return all products under warranty with transportation charges prepaid.

This warranty replaces all other warranties, expressed or implied, including, but not limited to, any implied warranty of merchantability, fitness, or adequacy for any particular purposes or use. Teledyne LeCroy shall not be liable for any special, incidental, or consequential damages, whether in contract or otherwise.

933092-00 Rev A
February, 2021