4000 series

Industrial resistive joysticks

Distinctive features and specifications



- ❑ Two standard mounting options
- ❑ Low current drain
- ❑ Variety of potentiometer options
- ❑ Robust
- ❑ All metal mechanism
- ❑ IP65 above panel
- ❑ Inherently immune to RFI
- ❑ Optional center-detect microswitching
- ❑ Available in two body variants

CABLE

14/0.12 – Fourteen strands of 0.12mm diameter tinned annealed copper wire PVC insulated, to a nominal OD of 1mm

- Red – +VCC for X and Y axis
- Blue – X axis wiper
- Green – Center tap
- Black – 0V for X and Y axis
- Yellow – Y axis wiper

7/0.127 – Seven strands of 0.127mm diameter tinned copper wire ETFE insulated, to a nominal OD of 0.7mm

- Orange – Pushbutton
- Red – +VCC for Z axis
- Green – Z axis wiper
- Blue – 0V for Z axis

NOTES:

1. All 4000 series are supplied with 150mm of twisted cable harness, with tinned ends.
2. Connectors fitted upon request.
3. If supplied, microswitches are rated for up tp 6A and are not wired, allowing the user flexibility of connection.

TECHNICAL

- Life Cycles: > 5 Million Operations
- Lever Material: Stainless Steel
- Handle Material: See Guide
- Pivot Blocks: HE30 Alloy
- Temperature Range: -20°C to +55°C (-4°F to +131°F)
- Linearity: ±2%
- Power Rating: 1W at 70°C (158°F)
  Derate to 0W at 125°C (257°F)
- Preferred Load: >100K
- Weight: 110 Grams
- Angle of Travel: 27.5° (X,Y) and 50° (Z)
- Body Material: Glass Filled ABS or Steel
- Boot Material: Neoprene or santoprene
- Other Materials: Brass
- Resistance Tolerance: ±20%
- Output Smoothness: 0.1% max.
- Insulation Resistance: 1000MOhms, 500VDC
- Potentiometer Alignment: To Center of Track (±1%)
- Above Panel Seal: IP65 (subject to handle)

NOTES:

1. All values are nominal.
2. All specifications shown are based on a standard configuration and are provided for guidance only.
3. Please refer to APEM for assistance on how to achieve the best performance from your chosen configuration.

SERIES	Axis	-2-	-1-	Bezel	Modifier
4 4000	1 One 2 Two 3 Three			0 None 3 Square 5 Circular	00 None 06 4 Microswitches[1] 113 2 Microswitches[1]

Body	Pots	Spring	Handle*	Boot
R Closed P Open	1 10K 340° 5 5K 340° 8 5K 55° 9 5K 55° +CT	F Friction Hold[1] H Strong S Standard W Weak	BL Round E Conical Q Skirted R Third Axis	1 Internal[1] 5 Standard

NOTE:
1. Only available on 4P types.

* for more handles see next pages

Note: The company reserves the right to change specifications without notice.

4000 series
Industrial resistive joysticks

Overview

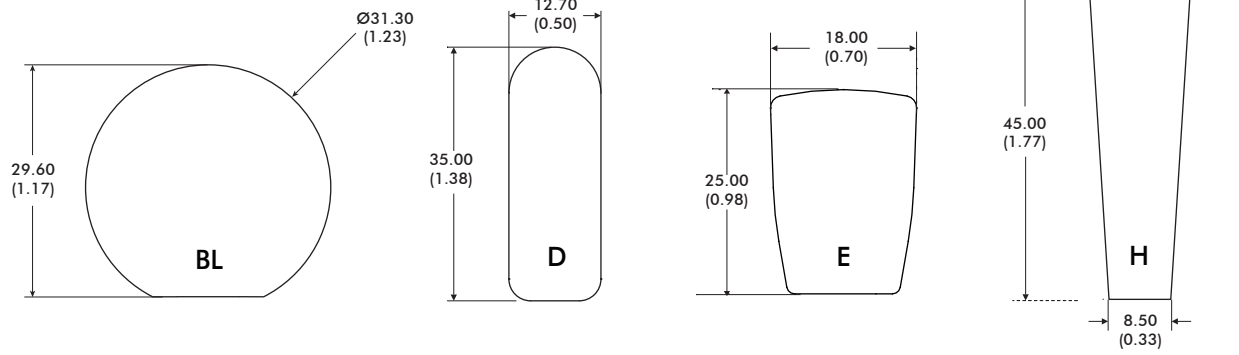

MATERIAL	Nylon	Aluminum	Nylon	Stainless Steel
FINISH	Sparked Matt	Anodised	Sparked Matt	Natural
STANDARD COLOR	Black	Black	Black	Stainless Steel
OTHER COLORS	Not Available	Not Available	Upon Request	Not Available
NOTES:				

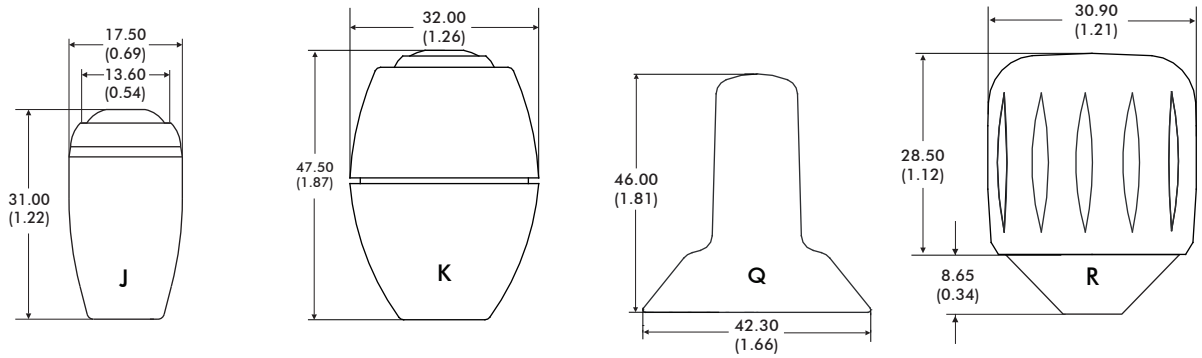

MATERIAL	ABS	ABS	Nylon	Aluminum
FINISH	Sparked Matt	Sparked Matt	Sparked Matt	Anodised
STANDARD COLOR	Black	Black	Black	Black
OTHER COLORS	Upon Request	Not Available	Not Available	Not Available
NOTES:	Uses APEM IS Switches	Uses APEM IS Switches		Third Axis function

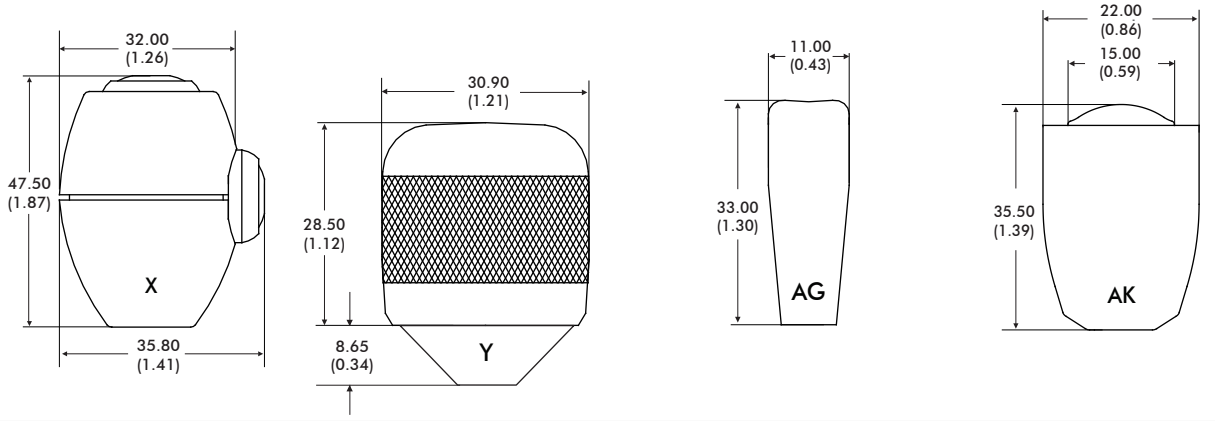

MATERIAL	ABS	Aluminum	Stainless Steel	Aluminum
FINISH	Sparked Matt	Anodised	Polished	Anodised
STANDARD COLOR	Black	Black	Stainless	Black
OTHER COLORS	Upon Request	Not Available	Not Available	Not Available
NOTES:	Uses APEM IS Switches	Third Axis function		Uses APEM IA Switches

NOTE:
1. Dimensions are in mm/(inch).

Note: The company reserves the right to change specifications without notice.

4000 series
Industrial resistive joysticks

Overview

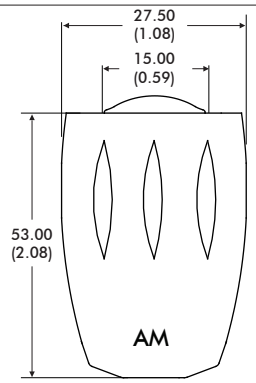

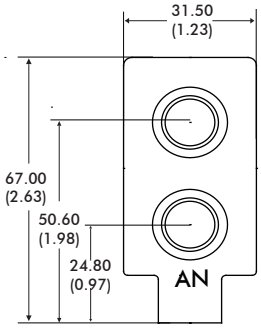

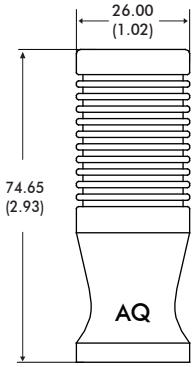

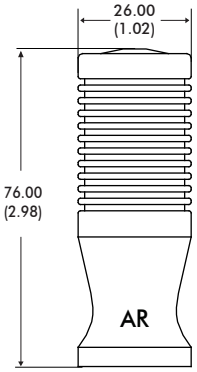

MATERIAL	Aluminium	Delrin	Aluminum	Aluminum
FINISH	Anodised	Gloss	Anodised	Anodised
STANDARD COLOR	Black	Black	Black	Black
OTHER COLORS	Upon Request	Not Available	Not Available	Not Available
NOTES:	Uses APEM IA switches	Uses APEM IS switches		Uses Apem IA Switches

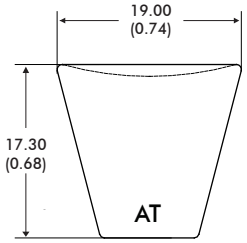

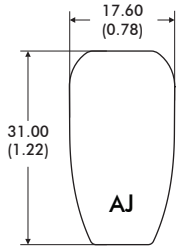

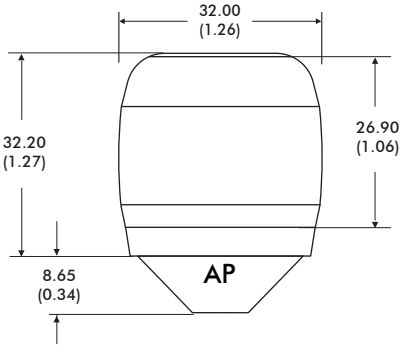

MATERIAL	Nylon	Stainless Steel	Santoprene over Nylon
FINISH	Sparked Matt	Polished	Soft Touch
STANDARD COLOR	Black	Stainless Steel	Black
OTHER COLORS	Upon Request	Not Available	Upon Request
NOTES:			Z Axis functionality

NOTES:
1. Dimensions are in mm/(inch).
2. Unless otherwise specified, all joysticks are supplied with black switches in the handles.

Note: The company reserves the right to change specifications without notice.

4000 series
Industrial resistive joysticks

Overview

CLOSED BODY

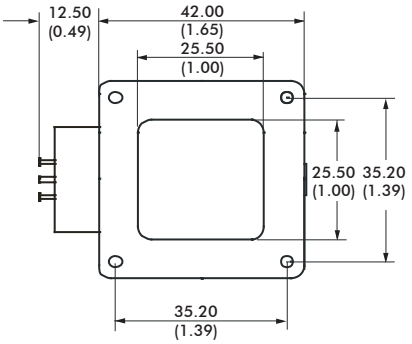

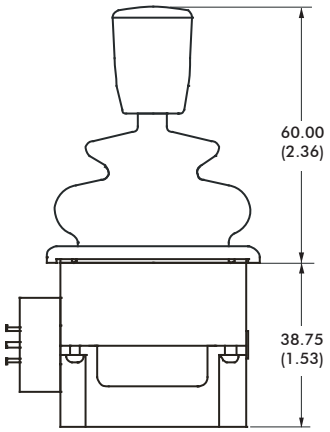

OPEN BODY

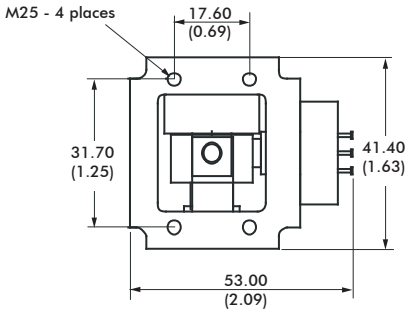

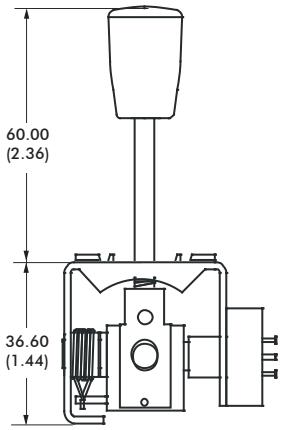

NOTE:
The dimensions shown are for a generic two axis 4000 series open body with the E type handle, and a generic two axis 4000 series closed body also with the two axis E type handle. For specific dimensions of this or any other configuration please refer to APEM.

MICROSWITCHES

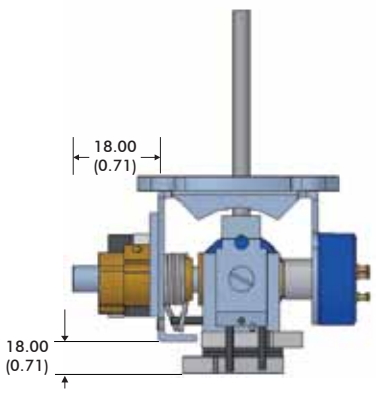

MICROSWITCHES



NOTE:
1. Dimensions are in mm/(inch).

OPEN FRAME - PANEL CUT-OUT AND MOUNTING INSTALLATION

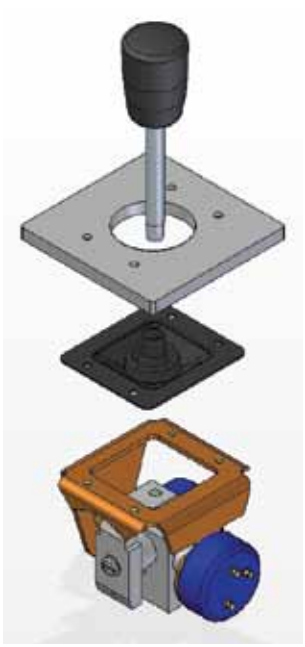

MOUNTING CUT-OUT

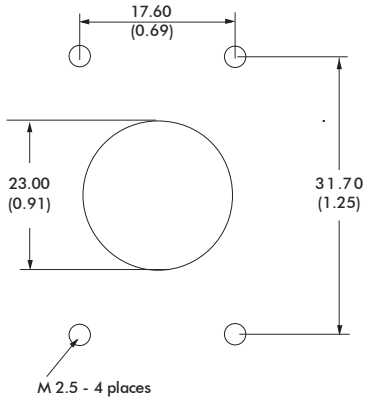

The joystick mounts from beneath the panel and the boot is trapped between the joystick and the panel. No bezel is necessary for this installation, since the panel acts as the bezel. The frame has M2.5 tapped holes and as such M2.5 machine screws are recommended for this mounting.

CLOSED FRAME - PANEL CUT-OUT AND MOUNTING INSTALLATION

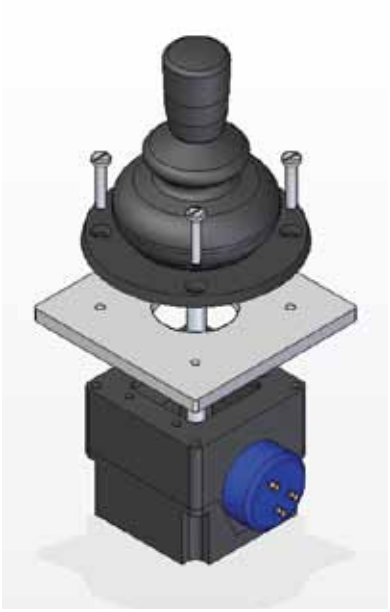

MOUNTING CUT-OUT

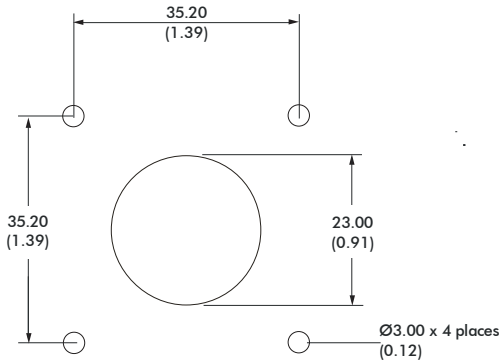

The body of the joystick is mounted from beneath the panel. The boot is passed through the panel cut-out and is held onto the front face of the panel by the mounting bezel. The square bezel has a gloss finish and is designed for use with No.4 x 3/8" pan head self tapping screws whereas the circular bezel has a matt finish and is designed for countersunk screws.

NOTES:
1. Dimensions are in mm/(inch).
2. During the mounting process, great care should be taken not to damage the boot.
   All panel cut-outs should be free from sharp edges and swarf that may damage the boot.

4000 series
Industrial resistive joysticks

Overview

MECHANISM

Unlike most other products in it's class the 4000 series employs an all-metal mechanism, providing the finest feel. It delivers consistent return to center performance over life, across a broad range of applications and operating environments. The 4000 series is offered in two body styles; the more standard closed body type should be selected for those applications requiring standard single or dual axis functionality. The open frame variant may be specified for those applications requiring friction hold functionality, additional center detect microswitches or where the above the panel height must be kept to a minimum. In case an open frame joystick is specified with a standard (5) boot, a bezel must be also used. Both body styles employ the same mechanism and therefore provide the same performance and feel.

POTENTIOMETERS

The high quality plastic film potentiometers employed as standard in the 4000 series have 340° tracks. With a shaft deflection angle of 55° (±27.5°), a typical 12V supply would therefore result in a full-scale nominal deflection from 5V to 7V, operating about a nominal 6V center. The 4000 series is available with alternative potentiometers, including the option of the 5K-55° track variant, providing rail-to-rail signal swings for applications where these are necessary and additional amplification is not practical. The potentiometers on the 4000 series are designed for use as a variable potential divider rather than a two pin variable resistor. Noise generated by the contact resistance of the wiper to the track dictates that for optimum performance the output signals should be fed into a load of greater than 100K.
Potentiometer Option 9 is to special order only, and may be subject to longer than standard lead times.

PANEL CUT-OUT

Being a sub-panel mount joystick the panel cut-out may be used to limit the deflection of the joystick. The maximum allowable panel cut-out dimensions are shown on the following page. Where some handles may be larger than the specified panel cut-out please refer to the APEM sales team. Subsequently the joystick may be supplied without the handle fitted, or with an additional mounting plate.

SPRINGING

As standard 4000 series are offered sprung to center. The standard spring force requires 1.3N (nominally) to off-center the joystick. The 4000 series may be specified with a lighter spring (1N), or a stronger spring (1.6N).
N.B. Forces quoted are subject to exact joystick configuration and are provided as a guide only.
The 4000 series also offers a friction hold configuration, whereby the handle will remain in the position it is left when no operator is present. The amount of friction may be varied prior to installation by adjusting the torque setting of the friction clutches.

SEALING

As standard, the 4000 series is sealed to IP65 above the panel. This may be subject to exact configuration selected. Some configurations will yield an IP67 seal. Please refer to APEM for details of your chosen mounting, handle and boot options and for guidance as to the best level of panel seal achievable.