TI01574C/07/EN/01.21
71516706
2021-01-11

Technical Information
Memosens CPS31E

pH sensor for standard applications in drinking water and swimming pool water



Digital with Memosens 2.0 technology

Application

- Drinking water
- Swimming pool water
- pH compensation during the measurement of free chlorine

With ATEX, IECEx, CSA C/US, NEPSI, Japan Ex and INMETRO approvals for use in hazardous areas Zone 0, Zone 1 and Zone 2.

Your benefits

- Can be used at pressures up to 4 bar (58 psi) (absolute)
- Application up to 80 °C (176 °F)
- No biocontamination thanks to AgCl packing
- 1 or 3 ceramic junctions
- Very low ion depletion of electrolyte
- Integrated NTC 30K temperature sensor for effective temperature compensation
- Optionally available with salt storage for longer operating life

Other advantages provided by Memosens technology

- Maximum process safety thanks to non-contact, inductive signal transmission
- Data security thanks to digital data transmission
- Very easy to use as sensor data are saved in the sensor
- Predictive maintenance can be performed by recording sensor load data in the sensor

Endress+Hauser
People for Process Automation

Function and system design

Measuring principle

pH measurement

The pH value is used as a unit of measurement for the acidity or alkalinity of a medium. The membrane glass of the electrode delivers an electrochemical potential that depends on the pH value of the medium. This potential is generated by the selective accumulation of H^+ ions on the outer layer of the membrane. As a result, an electrochemical boundary layer with an electrical potential difference forms at this point. An integrated Ag/AgCl reference system serves as the required reference electrode.

The measured voltage is converted to the corresponding pH value using the Nernst equation.

Measuring system

A complete measuring system comprises at least:

- pH sensor CPS31E
- Transmitter, e.g. Liquiline CM44x, CM42
- Memosens data cable CYK10 or CYK20
- Assembly
  - Immersion assembly, e.g. Dipfit CPA111
  - Flow assembly, e.g. Flowfit CCA250

Additional options are available depending on the application:
Automatic cleaning and calibration system, e.g. Liquiline Control CDC90

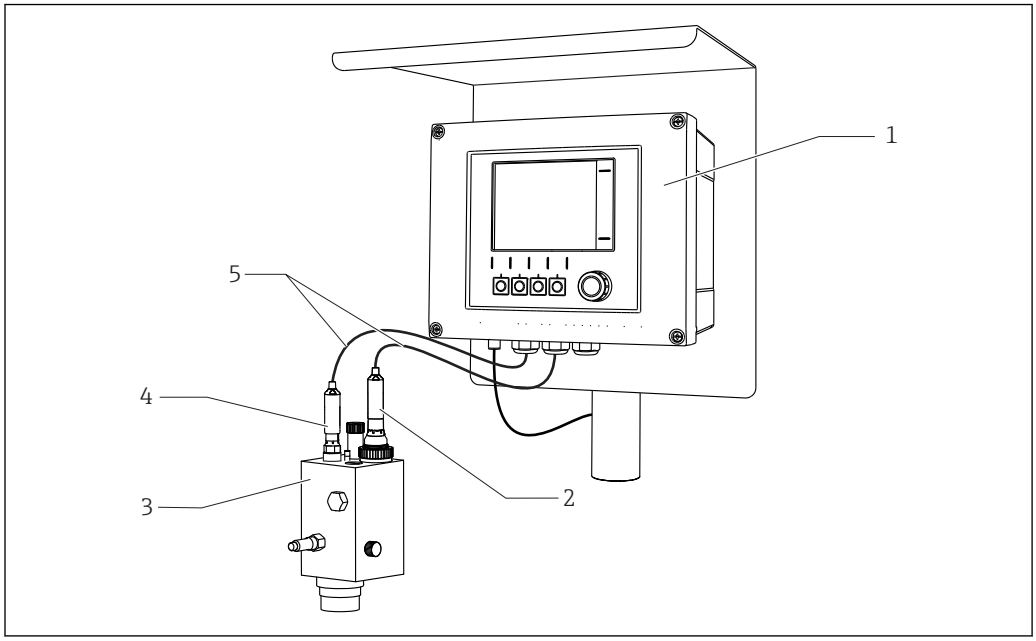

1 Example of a measuring system for pH measurement or for pH-compensated chlorine measurement

1 Transmitter Liquiline CM44x
2 Chlorine sensor CCS51D
3 Flow assembly Flowfit CCA250
4 pH sensor CPS31E
5 Memosens data cable CYK10

Communication and data processing

Communication with the transmitter

Always connect digital sensors with Memosens technology to a transmitter with Memosens technology. Data transmission to a transmitter for analog sensors is not possible.

Digital sensors can store measuring system data in the sensor, including:
- Manufacturer data
  - Serial number
  - Order code
  - Date of manufacture
- Calibration data
  - Calibration date
  - Slope at 25 °C (77 °F)
  - Zero point at 25 °C (77 °F)
  - Offset of integrated temperature sensor
  - Number of calibrations
  - Calibration history
  - Serial number of the transmitter used to perform the last calibration or adjustment
- Operating data
  - Temperature application range
  - pH application range
  - Date of initial commissioning
  - Maximum temperature value
  - Hours of operation under extreme conditions
  - CIP counter
  - Sensor load

The data listed above can be displayed with Liquiline CM42, CM44x, and Memobase Plus CYZ71D.

Dependability

Reliability

Easy handling

Sensors with Memosens technology have an integrated electronics unit that stores calibration data and other information (e.g. total hours of operation or operating hours under extreme measuring conditions). Once the sensor has been connected, the sensor data are transferred automatically to the transmitter and used to calculate the current measured value. As the calibration data are stored in the sensor, the sensor can be calibrated and adjusted independently of the measuring point. The result:
- Easy calibration in the measuring lab under optimum external conditions increases the quality of the calibration.
- Pre-calibrated sensors can be replaced quickly and easily, resulting in a dramatic increase in the availability of the measuring point.
- Thanks to the availability of the sensor data, maintenance intervals can be accurately defined and predictive maintenance is possible.
- The sensor history can be documented on external data carriers and evaluation programs, e.g. Memobase Plus CYZ71D.
- The saved application data of the sensor can be used to determine the continued use of the sensor in a targeted manner.

Interference immunity

Data security thanks to digital data transmission

Memosens technology digitizes the measured values in the sensor and transmits the data to the transmitter via a non-contact connection that is free from potential interference. The result:
- If the sensor fails or there is an interruption in the connection between the sensor and transmitter, this is reliably detected and reported.
- The availability of the measuring point is reliably detected and reported.

Safety

Maximum process safety
With inductive transmission of the measured value using a non-contact connection, Memosens guarantees maximum process safety and offers the following benefits:
- All problems caused by moisture are eliminated:
  - No corrosion at the connection
  - Measured values cannot be distorted by moisture
- The transmitter is galvanically decoupled from the medium. Issues concerning "symmetrical high-impedance" or "asymmetry" or the type of impedance converter are a thing of the past.
- Electromagnetic compatibility (EMC) is guaranteed by screening measures for the digital transmission of measured values.
- Intrinsically safe electronics mean operation in hazardous areas is not a problem. Complete flexibility thanks to individual Ex approvals for all components, such as sensors, cables and transmitters.

Input

Measured variable

pH value

Temperature

Measuring range

Application A
- pH: 1 to 12
- Temperature: −15 to 80 °C (5 to 176 °F)

Pay attention to the operating conditions in the process.

Power supply

Electrical connection

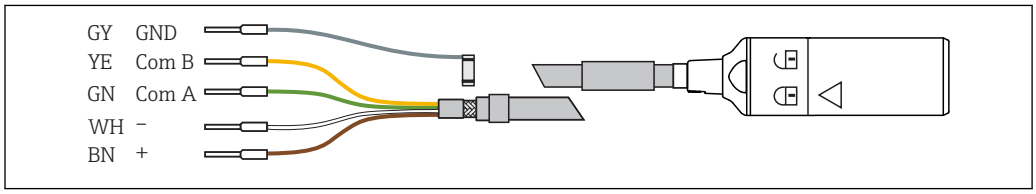

2 *Measuring cable CYK10 or CYK20*

▶ Connect the Memosens measuring cable, e.g. CYK10 or CYK20 to the sensor.

For further information on cable CYK10, see BA00118C

Performance characteristics

Reference system

Reference system AB and AC:	Ag/AgCl reference lead, bridging electrolyte: gel KCl, 3M
Reference system SB and SC:	Ag/AgCl reference lead, salt storage, KCl-saturated

Installation

Orientation

- Do not install the sensors upside-down.
- The installation angle from the horizontal must be at least 15°.

An installation angle <15° is not permitted, as otherwise an air bubble will form. Contact between the membrane glass and the reference lead will then no longer be guaranteed.

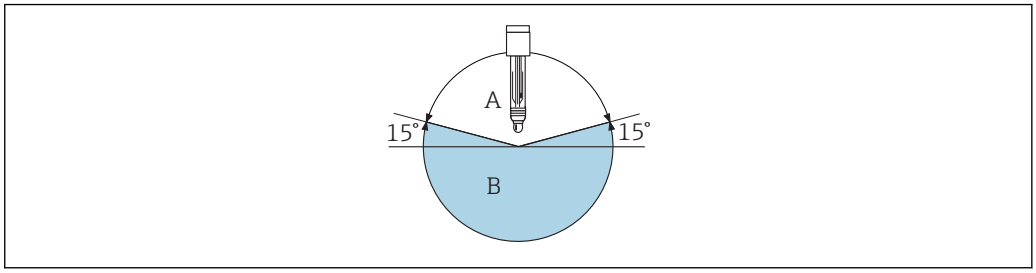

A0028039

3 *Installation angle at least 15° from the horizontal*

A Permitted orientation
B Incorrect orientation

Installation instructions

- Before screwing in the sensor, make sure the assembly thread, the O-rings and the sealing surface are clean and undamaged and that the thread runs smoothly.
- Pay attention to the installation instructions provided in the Operating Instructions of the assembly used.

▶ Screw in the sensor and tighten by hand with a torque of 3 Nm (2.21 lbf ft) (specifications only apply if installing in Endress+Hauser assemblies).

For detailed information on removing the moistening cap, see BA01988C

Environment

Ambient temperature range

NOTICE

Risk of damage from frost!

▶ Do not use the sensor at temperatures below .

Storage temperature

0 to 50 °C (32 to 122 °F)

Degree of protection

IP 68 (10 m (33 ft) water column, 25 °C (77 °F), 45 days, 1 M KCl)

Electromagnetic compatibility (EMC)

Interference emission and interference immunity as per:
- EN 61326-1:2013
- EN 61326-2-3:2013
- NAMUR NE21:2017

Process

Process temperature range

−15 to 80 °C (5 to 176 °F)

Process pressure range

0.8 to 4 bar (11.6 to 58 psi) (absolute)

⚠ CAUTION

Pressurization of sensor due to prolonged use under increased process pressure

Possibility of sudden rupture and injury from glass splinters!

- ► Avoid fast heating of these pressurized sensors if they are used under reduced process pressure or under atmospheric pressure.
- ► When handling these sensors, always wear protective goggles and appropriate protective gloves.

Conductivity

Reference system AB and SB:	Minimum 100 µS/cm (minimized flow; pressure and temperature must remain constant)
Reference system AC and SC:	Minimum 50 µS/cm (minimized flow; pressure and temperature must remain constant)

Pressure/temperature ratings

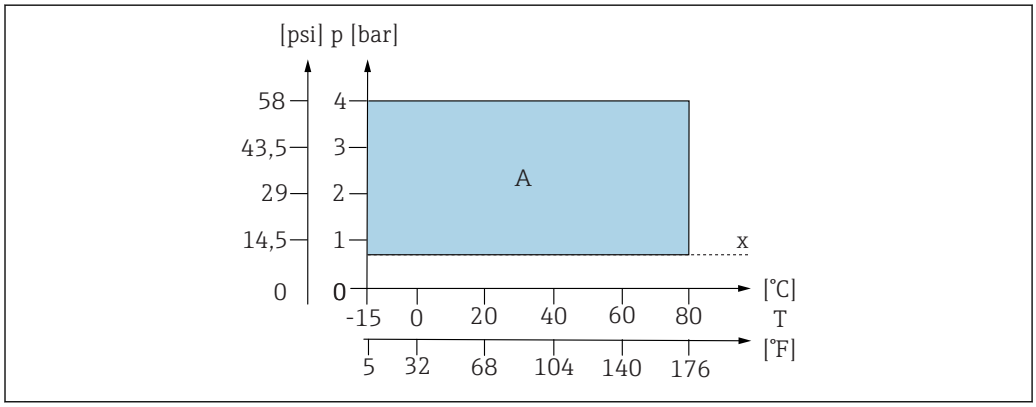

4 *Pressure/temperature ratings*

A *Application A*
x *Atmospheric pressure*

Mechanical construction

Design, dimensions

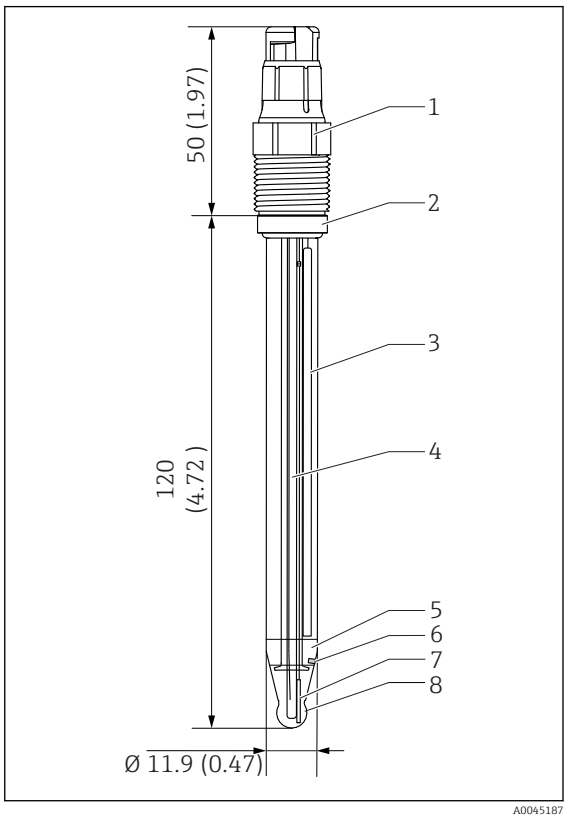

5 *CPS31E. Engineering unit: mm (in)*

1 *Memosens plug-in head with process connection*
2 *O-ring with thrust collar*
3 *Reference lead*
4 *Temperature sensor*
5 *AgCl packing*
6 *Ceramic junction*
7 *pH reference lead*
8 *pH glass membrane*

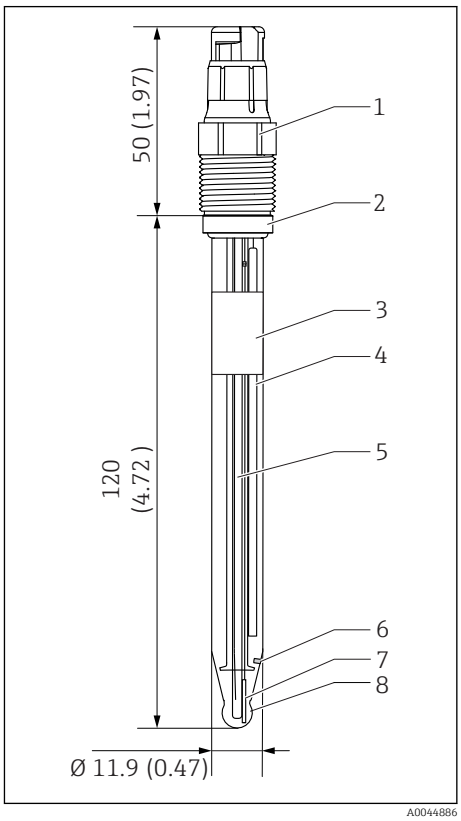

6 *CPS31E with salt storage. Engineering unit: mm (in)*

1 *Memosens plug-in head with process connection*
2 *O-ring with thrust collar*
3 *Salt storage*
4 *Reference lead*
5 *Temperature sensor*
6 *Ceramic junction*
7 *pH reference lead*
8 *pH glass membrane*

Weight

Installed length	120 mm (4.72 in)
Weight	40 g (1.4 oz)

Materials

Sensor shaft	Glass to suit process
pH membrane glass	Type A
Metal lead	Ag/AgCl
Open aperture	Ceramic junction
O-ring	FKM
Process coupling	PPS fiber-glass reinforced
Nameplate	Ceramic metal oxide

Temperature sensor

NTC 30K

Plug-in head

Memosens plug-in head for digital, non-contact data transmission, pressure resistance 16 bar (232 psi) (relative)

Process connections

Pg 13.5

Certificates and approvals

CE mark

The product meets the requirements of the harmonized European standards. As such, it complies with the legal specifications of the EU directives. The manufacturer confirms successful testing of the product by affixing to it the CE mark.

Ex approval

ATEX
II 1G Ex ia IIC T4/T6 Ga

IECEx
Ex ia IIC T4/T6 Ga

NEPSI
Ex ia IIC T4/T6 Ga

CSA C/US
- IS Cl. I Div 1, GP A-D Ex ia IIC T4/T6
- IS Cl. I Zone 0, AEx ia IIC T4/T6

Japan Ex
Ex ia IIC T4/T6 Ga

INMETRO
Ex ia IIC T4/T6 Ga

Ex versions of digital sensors with Memosens technology are identified by an orange-red ring on the plug-in head.

Pay attention to the instructions for Memosens data cable CYK10 and transmitter CM82.

Additional certification

TÜV certificate for Memosens plug-in head

Pressure resistance 16 bar (232 psi) relative, minimum three times the safety pressure

EAC

The product has been certified according to guidelines TP TC 004/2011 and TP TC 020/2011 which apply in the European Economic Area (EEA). The EAC conformity mark is affixed to the product.

Ordering information

Product page

www.endress.com/cps31e

Product Configurator

On the product page there is a **Configure** button to the right of the product image.

1. Click this button.
   ↳ The Configurator opens in a separate window.
2. Select all the options to configure the device in line with your requirements.
   ↳ In this way, you receive a valid and complete order code for the device.
3. Export the order code as a PDF or Excel file. To do so, click the appropriate button on the right above the selection window.

For many products you also have the option of downloading CAD or 2D drawings of the selected product version. Click the **CAD** tab for this and select the desired file type using picklists.

Scope of delivery

The delivery comprises:
- Sensor in the version ordered
- Operating Instructions
- Safety instructions for the hazardous area (for sensors with Ex approval)

Accessories

The following are the most important accessories available at the time this documentation was issued.

▶ For accessories not listed here, please contact your Service or Sales Center.

Device-specific accessories

Assemblies

Unifit CPA842
- Installation assembly for food, biotechnology and pharmaceutics
- With EHEDG and 3A certificate
- Product Configurator on the product page: www.endress.com/cpa842

Technical Information TI01367C

Cleanfit CPA875
- Retractable process assembly for sterile and hygienic applications
- For in-line measurement with standard sensors with 12 mm diameter, e.g. for pH, ORP, oxygen
- Product Configurator on the product page: www.endress.com/cpa875

Technical Information TI01168C

Dipfit CPA140
- pH/ORP immersion assembly with flange connection for very demanding processes
- Product Configurator on the product page: www.endress.com/cpa140

Technical Information TI00178C

Unifit CPA442
- Installation assembly for food, biotechnology and pharmaceutics
- With EHEDG and 3A certificate
- Product Configurator on the product page: www.endress.com/cpa442

Technical Information TI00306C

Cleanfit CPA473
- Stainless steel process retractable assembly with ball valve shutoff for particularly reliable separation of the medium from the environment
- Product Configurator on the product page: www.endress.com/cpa473

Technical Information TI00344C

Cleanfit CPA474
- Plastic process retractable assembly with ball valve shutoff for particularly reliable separation of the medium from the environment
- Product Configurator on the product page: www.endress.com/cpa474

Technical Information TI00345C

Dipfit CPA111
- Immersion and installation assembly made of plastic for open and closed vessels
- Product Configurator on the product page: www.endress.com/cpa111

Technical Information TI00112C

Flowfit CPA240
- pH/ORP flow assembly for processes with stringent requirements
- Product Configurator on the product page: www.endress.com/cpa240

Technical Information TI00179C

Flowfit CPA250
- Flow assembly for pH/ORP measurement
- Product Configurator on the product page: www.endress.com/cpa250

Technical Information TI00041C

Ecofit CPA640
- Set comprising adapter for 120 mm pH/ORP sensors and sensor cable with TOP68 coupling
- Product Configurator on the product page: www.endress.com/cpa640

Technical Information TI00246C

Flowfit CCA250
- Flow assembly for disinfection and pH/ORP sensors
- Product Configurator on the product page: www.endress.com/cca250

Technical Information TI00062C

Buffer solutions

High-quality buffer solutions from Endress+Hauser - CPY20
The secondary buffer solutions have been referenced to primary reference material of the PTB (German Federal Physico-technical Institute) or to standard reference material of NIST (National Institute of Standards and Technology) according to DIN 19266 by a laboratory accredited by the DAkkS (German accreditation body) according to DIN 17025.
Product Configurator on the product page: www.endress.com/cpy20

Measuring cable

Memosens data cable CYK10
- For digital sensors with Memosens technology
- Product Configurator on the product page: www.endress.com/cyk10

Technical Information TI00118C

Memosens laboratory cable CYK20
- For digital sensors with Memosens technology
- Product Configurator on the product page: www.endress.com/cyk20



www.addresses.endress.com

Endress+Hauser

People for Process Automation