Safety Interlock Switch with Guard Locking
KL1-P KL1-SS Operating Instructions



KL1-P



KL1-SS

IMPORTANT NOTE:

Read and understand these instructions before installing, operating, or maintaining this equipment.
The product is designed to be a component of a customised safety orientated control system. It is the responsibility of the user to ensure the correct overall functionality of its systems and machines. IDEM, its subsidiaries and affiliates, are not in a position to guarantee all of the characteristics of a given system or product not designed by IDEM.

Application:

Tongue operated switches are designed to fit to the leading edge of sliding, hinged or lift off machine guards to provide positively operated switching contacts to EN60947-5-1.
They are designed to provide robust position interlock detection for moving guards and will remain locked until the solenoid voltage is applied to the switch.

Operation:

The switch is rigidly mounted to the frame of the guard or machine. The actuator is fitted to the moving part (frame) of the guard and is aligned to the switch entry aperture. The actuator profile is designed to match a cam mechanism within the switch head and provides a positively operated switch. When the actuator is inserted into the switch the safety contacts close and allow the machine start circuit to be enabled. When the solenoid is energised the safety contacts are positively opened and the machine circuit is broken.

Installation:

1. Installation of all switches must be in accordance with a risk assessment for the individual application.
   Installation must only be carried out by competent personnel and in accordance with these instructions.
2. M5 mounting bolts must be used to fix the switch and actuator, the tightening torque to ensure reliable fixing is 4.0 Nm.
   Tightening torque for the lid screws, conduit entry plugs and cable glands must be 1.0 Nm to ensure IP seal.
   Only use the correct size gland for the conduit entry and cable outside diameter.
   Note: For ½" NPT versions, the gland thread length must be limited to10mm maximum.
   Tightening torque for the connection terminal screws is 0.7 Nm, max conductor size is 1.0 sq.mm.
   The switch head position can be selected by loosening the 4 head bolts and then rotating to the position required.
   Tightening torque for the head bolts is 1.5Nm.
   Always check for correct 24V.dc polarity to LED 2 (if fitted).
3. Always fit a mechanical stop to the guard to prevent damage to the front of the switch.
   Set the actuator gap to 3mm when the guard is closed and against the stop. (See Fig. A.).
   Use alignment guides to ensure that the actuator enters the switch without interfering with the sides of the switch aperture.
   If fitted, ensure access to at least one of the auxiliary release points.
   The switch can be positioned / shielded to prevent unintended actuation of the auxiliary release.
   The auxiliary release function is achieved by use of a tool and is to be used in exceptional circumstances.
   The auxiliary release can be protected by use of a tamper coating to protect against unintended operation.
   If operated this tamper protection must be restored.
   Always fit the aperture plug to the unused entry aperture to prevent debris entering the switch mechanism.

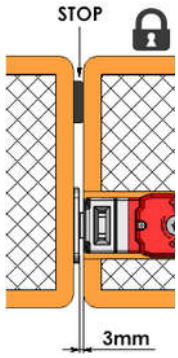

(Fig. A)

4. After installation check operation of all control circuits and the locking function.
   For applications with a run down time after removing power, ensure that the correct timing allowance has been made before energising the solenoid.
   LED1 will illuminate when power is applied to A1 and A2 (solenoid feed). LED2 GREEN (if used) will be illuminated when the actuator is locked.

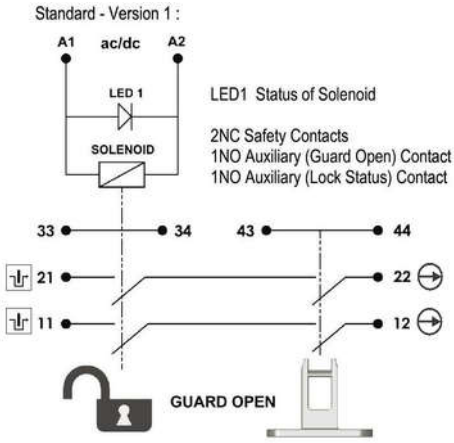

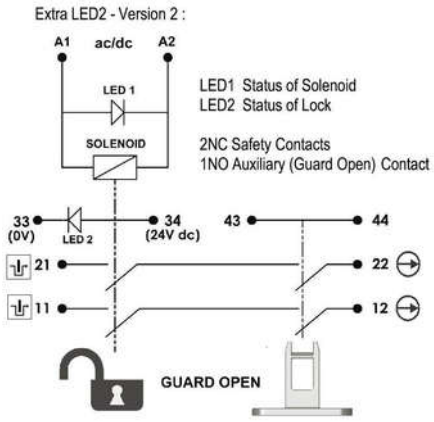

**WARNING: DO NOT DEFEAT, TAMPER, OR BYPASS THE SAFETY FUNCTION.
FAILURE TO DO SO CAN RESULT IN DEATH OR SERIOUS INJURY.**

**AVERTISSMENT: NE PAS DESACTIVER, MODIFIER, RETIRER, OU CONTOURNER
CETI INTERVERROUILLAGE IL PEUT EN RESULTER DES
BLESSURES GRAVES DU PERSONNEL UTILISATEUR.**

Original Instructions.

To request this data sheet in other languages please contact info@idemsafety.com
Um dieses Datenblatt in Deutscher Sprache wenden Sie sich bitte anfordern info@idemsafety.com
Pour obtenir cette fiche en Français, veuillez contacter info@idemsafety.com
Para solicitar esta hoja de datos en Español, por favor contacto con info@idemsafety.com

Safety Interlock Switch with Guard Locking

IMPORTANT

The Risk Assessment for the particular application should include the risk of spare actuators. Spare actuators should not be readily available and must be securely controlled. Application consideration must be given to the fixing of the actuator which has to be in a way that prevents disassembly by easy means.

Ensure that the switch holding force (Fzh) is sufficient to withstand the static forces applied during normal use and dynamic effects caused by bouncing of the guard shall not create an impact reaction force which exceeds the holding force. If the expected impact reaction forces are higher than the specified holding force for the switch, hen design measures must be applied to avoid the force.

The safety functions and mechanics must be tested regularly. For applications were infrequent guard access is foreseeable, the system must have a manual function test to detect a possible accumulation of faults. At least once per month for PLe Cat3/4 or once per year for PLd Cat3 (ISO13849-1). Where possible it is recommended that the control system of the machine demands and monitors these tests, and stops or prevents the machine from starting if the test is not done. (See ISO14119).

Maintenance:

Every Month: Check the switch actuator and body for signs of mechanical damage and wear.
Replace any switch showing damage.

Every 6 Months: Check for mechanical damage to switch body or actuator.
Isolate power and remove cover. Check screw terminal tightness and check for signs of moisture ingress. Never attempt to repair any switch. Replace any switch displaying damage.

These requirements form part of the product warranty.

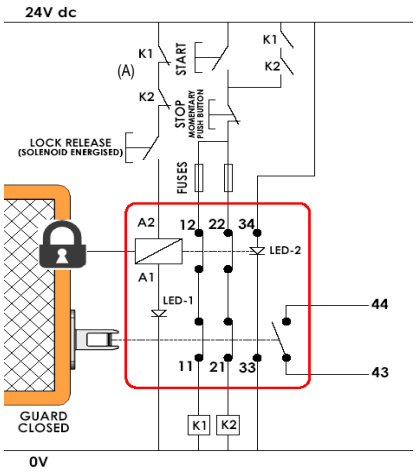

Application Example: Dual Channel (non-monitored).

The guard is locked closed until the solenoid is energized. The solenoid can only be energized when the auxiliary contacts (A) of contactors K1 and K2 are closed. When the lock release button is pushed the locking mechanism is released and the switch contacts 11-12 and 21-22 are opened. These contacts are in series with contactor coils of K1 and K2 and will prevent re-start whilst the guard is open. If after pressing the Stop button either contactor K1 or K2 stays closed the machine will stop but the solenoid cannot be energized or the guard opened.
LED 1 provides visual indication of solenoid power applied.
LED 2 provides visual indication of guard locked and machine able to start.
System is shown with machine stopped, guard closed and locked, and the solenoid able to be energised (Lock released).

Quick Connect (QC) M12 8 Way Male (on Flying Lead 250mm) Pin view from switch	Switch Circuit
2 7	A1 A2
4 6	11 / 12
8 5	21 / 22
3 1	43 / 44

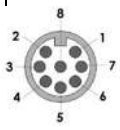

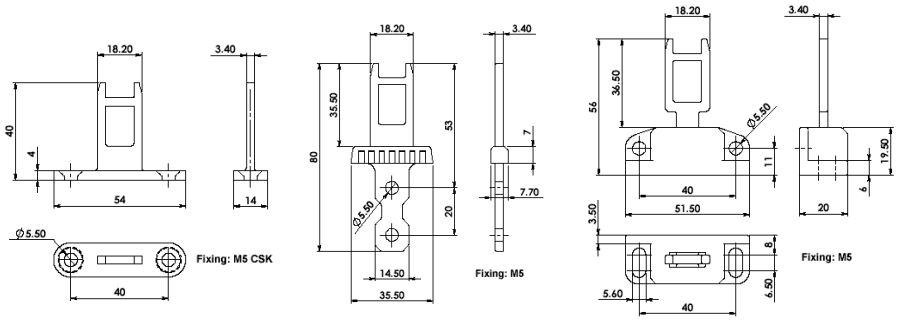

Conforming to Standard:	ISO14119, IEC 60947-5-1, UL60947-5-1, ISO13849-1
Safety Classification and Reliability Data:	
Mechanical Reliability B10d	2.5 x 10^6 operations at 100mA load
ISO 13849-1	up to PLe / Cat.4 depending upon system architecture
EN 62061	up to SIL3 depending upon system architecture
Safety Data - Annual Usage	8 cycles per hour / 24 hours per day / 365 days
	MTTFd 356 years
Solenoid Voltage (by part number)	24V ac/dc or 110V. ac or 230V. ac +/- 10% (12W.)
LED 2 (if fitted) Supply Voltage	24V dc +/- 10%
Safety Contacts 11/12 21/22	Utilization Category AC15 A300 3A.
	Thermal Current (Ith) 5A
Overload protection fuse (fuse externally)	10A. (FF).
Auxiliary Contact 33/34	24V.ac/dc 0.5A. Maximum.
Auxiliary Contact 43/44	230V.ac/dc 0.5A. Maximum.
Rated Insulation Voltage	600VAC
Rated Impulse Withstand Volt	2500VAC
Travel for Positive Opening	10mm
Approach Speed	200mm/m. to 1000mm/s.
Man. Actuation Frequency	2 cycle/sec
Actuator entry minimum radius	175mm Standard 100mm Flexible
Case Material	KL1-P Polyester KL1-SS S/Steel 316
Head Material	Stainless Steel 316
Actuator Material	Stainless steel 316
Enclosure Protection	IP67 (KL1-SS IP69K)
Operating Temperature	-25°C to 40°C
Holding Force	KL1-P F1Max: 1400N. Fzh: 1076N.
	KL1-SS F1Max: 2000N. Fzh: 1538N.
Vibration	IEC 68-2-6, 10-55Hz+1Hz,
	Excursion: 0.35mm, 1 octave/min
Conduit Entry	Various (See Sales Part Numbers)
Fixing	4 x M5

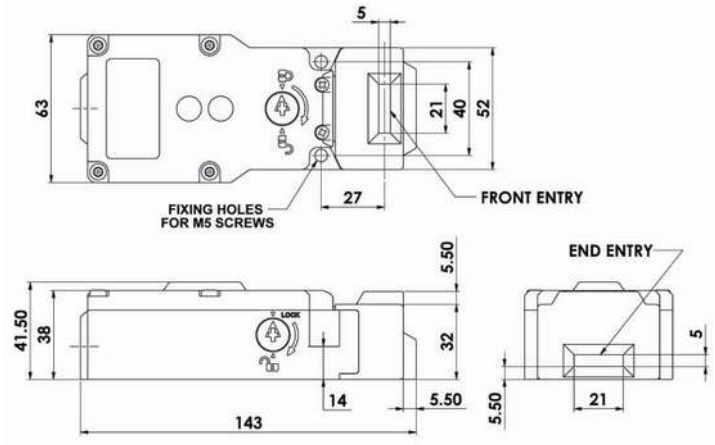

Information with regard to UL Standards: Type 1 enclosure.
Maximum temperature 40°C.
Use 16-28AWG stranded copper conductors (rated 90°C).
Terminal Torque 6 lb ins. (0.7Nm).
Intended for same polarity use. A300 Pilot Duty. 240V. 3A.
PF 0.38 or greater, tested for 6,000 cycles endurance
Use one polymeric conduit connection.
Not suitable for connection to rigid metal conduit.
KL1-SS Earth bonding terminal inside enclosure if required, use 16-12AWG conductors).

IDEM SAFETY SWITCHES Ltd., 2 Ormside Close, Hindley Industrial Estate, Hindley Green, Wigan, WN2 4HR UK. Tel: +44 (0)1942 257070 Fax.: +44 (0)1942 257076
IDEM (USA) 4416 Technology Drive, Fremont, CA 94538 Tel:510-445-0751 Fax:1866-431-7064 email: sales@idemsafety.com Web: www.idemsafety.com

Doc: 102547
Jan 19