8B0P0440HC00.001-1

1 General information

- Wide input voltage range
- Integrated connection for external braking resistor
- Passive motor short circuit brake

Passive motor short circuit brake

A motor with a hanging load is connected to an ACOPOSmulti drive system with passive power supply module 8B0P with passive motor short circuit brake. If the power supply to the drive system is disconnected and the hanging load begins sinking (due to failure of the motor holding brake, for example), then the motor axis rotates and the DC bus voltage increases. If the DC bus voltage overshoots a value of 15 VDC, then the DC bus is shorted via a thyristor. This limits the speed at which the hanging load sinks.

The passive motor short circuit brake is designed for up to 25 kW of power. One fault event is permitted to occur maximum once every 15 minutes for this amount of power.

Information:

The passive motor short circuit brake is always active and cannot be influenced by the user!

Warning!

The passive motor short circuit brake works without current limiting. As a result, irreparable damage to drive system components (passive power supply module 8B0P, motor, etc.) is possible at excessively high power values.

The passive motor short circuit brake is not monitored. It therefore has no effect in the event of component failure!

2 Order data

Model number	Short description	Figure
	Cold plate or feed-through mounting	
8B0P0440HC00.001-1	ACOPOSmulti power supply module, passive, 44 A, HV, cold plate or feed-through mounting, passive motor short circuit brake	
	Required accessories	
	Terminal block sets	
8BZ0P044000.000-1A	Screw clamp set for ACOPOSmulti modules 8B0P0220Hx00.00x-1 and 8B0P0440Hx00.00x-1: 1x 8TB4104.202L-10, 1x 8TB4103.202A-00, 1x 8TB2106.2010-00	
	Optional accessories	
	Braking resistors	
8B0W0045H000.000-1	Braking resistor, 450 W, 50 R, IP20, terminals	
8B0W0045H000.001-1	Braking resistor, 450 W, 50 R, IP65, terminals	
8B0W0079H000.000-1	Braking resistor, 790 W, 33 R, IP20, terminals	
8B0W0079H000.001-1	Braking resistor, 790 W, 33 R, IP65, terminals	
	Fan modules	
8BXF001.0000-00	ACOPOSmulti fan module, replacement fan for ACOPOSmulti modules (8BxP/8B0C/8BVI/8BVE/8B0K)	
	Fuse sets	
8BXS003.0000-00	ACOPOSmulti fuse set: 1x fuse 10x38 mm, 30 A, fast-acting	
	POWERLINK/Ethernet cables	
X20CA0E61.00020	POWERLINK/Ethernet connection cable, RJ45 to RJ45, 0.2 m	
X20CA0E61.00025	POWERLINK/Ethernet connection cable, RJ45 to RJ45, 0.25 m	
X20CA0E61.00030	POWERLINK/Ethernet connection cable, RJ45 to RJ45, 0.3 m	
X20CA0E61.00035	POWERLINK/Ethernet connection cable, RJ45 to RJ45, 0.35 m	
X20CA0E61.00050	POWERLINK/Ethernet connection cable, RJ45 to RJ45, 0.5 m	
X20CA0E61.00100	POWERLINK/Ethernet connection cable, RJ45 to RJ45, 1 m	
	Shield component sets	

Table 1: 8B0P0440HC00.001-1 - Order data

Model number	Short description	Figure
8SCS000.0000-00	ACOPOSmulti shield component set: 1 shield plate 1x type 0, 1 hose clamp, B 9 mm, D 12-22 mm	
8SCS002.0000-00	ACOPOSmulti shield component set: 1x clamping plate; 2x clamps D 4-13.5 mm; 4x screws	
8SCS009.0000-00	ACOPOSmulti shield component set: 1x ACOPOSmulti holding plate SK8-14, 1x shield connection clamp SK14	
8SCS010.0000-00	ACOPOSmulti shield component set: 1x ACOPOSmulti holding plate SK14-20, 1x shield connection clamp SK20	
	Terminal blocks	
8TB2106.2010-00	6-pin screw clamp, single row, spacing: 5.08 mm, label 1: numbered serially	
8TB2106.2210-00	Push-in terminal block 6-pin, 1-row, spacing: 5.08 mm, label 1: numbered consecutively	
8TB4103.202A-00	Screw clamp terminal block 3-pin, single-row, pitch: 10.16 mm, labeling 2: PE RB- RB+, coding A: 000	
8TB4104.202L-10	4-pin screw clamp terminal block, 1-row, spacing: 10.16 mm, label 2: PE L3 L2 L1, coding L: 1010	

Table 1: 8B0P0440HC00.001-1 - Order data

3 Technical data

Model number	8B0P0440HC00.001-1
General information	
Note	Integrated passive motor short circuit brake
B&R ID code	0xA98A
Cooling and mounting method	Cold plate or feed-through mounting
Certifications	
CE	Yes
KC	Yes
UL	cULus E225616 Power conversion equipment
Mains connection	
Network configurations	TT, TN-S, TN-C-S [1)]
Mains input voltage	3x 380 to 3x 500 VAC ±10%
Frequency	50 / 60 Hz ±4%
Installed load	Max. 30.4 kVA
Power dissipation with continuous power	In preparation
Inrush current at 400 VAC	10 A
Switch-on interval	>120 s
Max. DC bus capacitance depending on mains voltage	
230 VAC	43.6 mF [2)]
400 VAC	14.4 mF [3)]
480 VAC	10 mF [4)]
Integrated line filter per EN 61800-3, category C3 [5)]	No
Integrated regeneration choke	No
Capable of power regeneration	No
Power factor correction (PFC)	No
Variant	
L1, L2, L3, PE	Male connector
PE	M5 threaded bolt
Shield connection [6)]	Yes
Terminal connection cross section	
Flexible and fine-stranded wires	
With wire end sleeves	0.5 to 16 mm²
Approbation data	
UL/C-UL-US	20 to 6 AWG
CSA	20 to 6 AWG
Terminal cable cross section dimension of shield connection	23 to 35 mm
DC bus connection	
Voltage	
Nominal	537 to 707 VDC
Continuous power [7)]	16 kW
Reduction of continuous power depending on mains input voltage	
Mains input voltage <3x 400 VAC	40 W/V * (400 V - Mains input voltage)
Reduction of continuous power depending on installation elevation	
Starting at 500 m above sea level	1.6 kW per 1000 m
Reduction of continuous power depending on cooling method	In preparation
Peak power output (supply)	48 kW

Table 2: 8B0P0440HC00.001-1 - Technical data

Model number	8B0P0440HC00.001-1
Power dissipation with continuous power	In preparation
DC bus capacitance	1320 µF
Protective measures	
Overload protection	Yes
Short circuit and ground fault protection	No
Variant	ACOPOSmulti backplane
24 VDC power supply [8)]	
Input voltage	25 VDC ±1.6%
Input capacitance	23.5 µF
Max. power consumption	12 W
Variant	ACOPOSmulti backplane
Braking resistor [9)]	
Peak power output	65 kW (max. 1 s)
Continuous power	3 kW
Min. braking resistance	7.5 Ω
Rated current of built-in fuse [10)]	30 A (fast-acting)
Variant	
RB+, RB-, PE	Male connector
Shield connection	Yes
Terminal connection cross section	
Flexible and fine-stranded wires	
With wire end sleeves	0.5 to 6 mm²
Approbation data	
UL/C-UL-US	20 to 6 AWG
CSA	20 to 6 AWG
Terminal cable cross section dimension of shield connection	23 to 35 mm
Protective measures	
Overload protection	Yes
Short circuit and ground fault protection	Yes (with RB+ using external replaceable fuse)
Electrical properties	
Discharge capacitance	0.9 µF
Operating conditions	
Permissible mounting orientations	
Hanging vertically	Yes
Lying horizontally	Yes
Standing horizontally	No
Installation elevation above sea level	
Nominal	0 to 500 m
Maximum [11)]	4000 m
Pollution degree per EN 61800-5-1	2 (non-conductive pollution)
Overvoltage category per EN 61800-5-1	III
Degree of protection per EN 60529	IP20
Ambient conditions	
Temperature	
Operation	
Nominal	5 to 40°C
Maximum [12)]	55°C
Storage	-25 to 55°C
Transport	-25 to 70°C
Relative humidity	
Operation	5 to 85%
Storage	5 to 95%
Transport	Max. 95% at 40°C
Mechanical properties	
Dimensions [13)]	
Width	106.5 mm
Height	317 mm
Depth	
Cold plate	212 mm
Feed-through mounting	209 mm
Weight	Approx. 4.9 kg
Module width	2

Table 2: 8B0P0440HC00.001-1 - Technical data

1) TT and TN power systems are commonly referred to as "Delta/Wye with grounded wye neutral" in the USA.
2) Up to Revision F0: 17.5 mF
3) Up to Revision F0: 5.8 mF
4) Up to Revision F0: 4 mF
5) Limit values from EN 61800-3 C3 (second environment).
6) Cables do not have to be shielded up to a total length of 3 m between the line filter and power supply module. Please contact B&R when using cable lengths >3 m.
7) Valid under the following conditions: 3x 400 VAC mains input voltage, 5 kHz switching frequency, 40°C ambient temperature, installation elevation <500 m above sea level, no derating due to cooling type.

8) The power supply modules have an integrated DC bus power supply for the electronics. The 24 VDC power supply from the ACOPOSmulti backplane only feeds the +24 VDC of the trigger inputs and the encoder power supplies on the encoder modules.
9) The power calculations are based on a DC bus voltage of 700 VDC.
Danger!
A component malfunction in the 8B0P passive power supply module can lead to continuous power output to the external braking resistor, causing it to overheat. This must be considered when selecting (e.g. intrinsic safety), organizing and operating the external braking resistor. Thermal monitoring and external cutoff devices should be implemented if necessary.
If B&R 8B0W braking resistors are used and the 8B0P power supply module is operated with a mains voltage of 3x 380 to 3x 500 VAC ±10%, there is no need for thermal monitoring since B&R 8B0W braking resistors are intrinsically safe under these conditions.
10) A Littelfuse KLK D 030 fuse must be used.
11) Continuous operation at an installation elevation of 500 m to 4,000 m above sea level is possible taking the specified reduction of continuous current into account. Requirements that go beyond this must be arranged with B&R.
12) Continuous operation at an ambient temperature of 40°C to max. 55°C is possible taking the specified reduction of continuous torque into account, but this results in premature aging of components.
13) These dimensions refer to the actual device dimensions including the respective mounting plate. Make sure to leave additional space above and below the devices for mounting, connections and air circulation.

4 Status indicators

Status indicators are located on the black cover of each module.

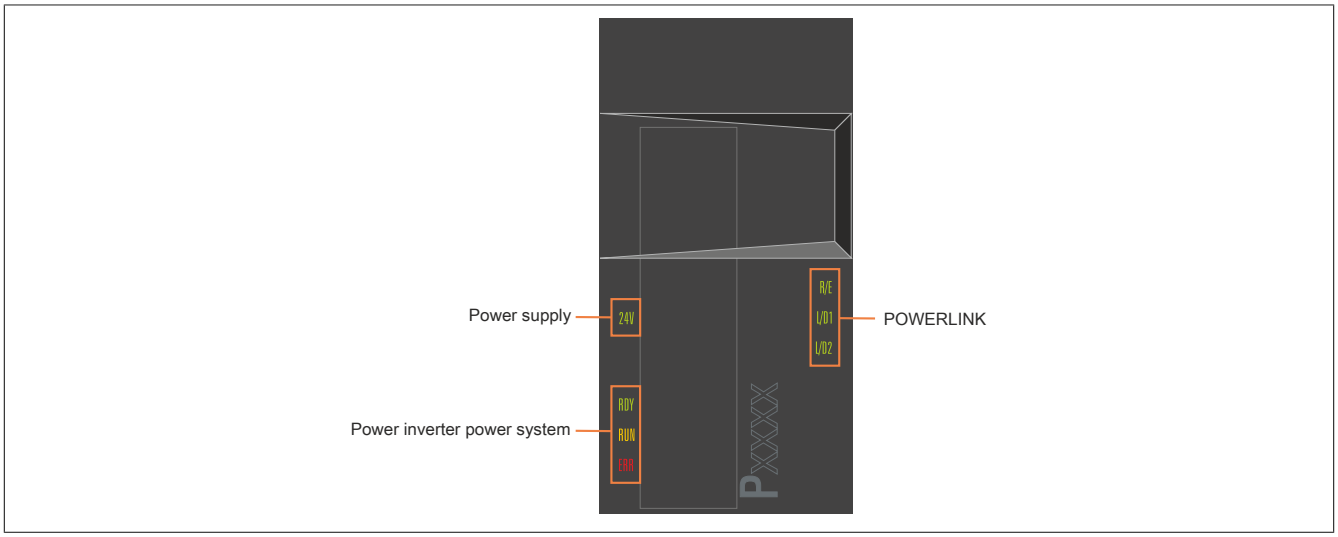

Figure 1: 8B0P power supply modules - Status indicator groups

4.1 LED status indicators

Status indicator group	Label	Color	Function	Description
POWERLINK	R/E	Green/Red	Ready/Error	see "POWERLINK - LED status indicators" on page 6
	L/D1	Green	Link/Data activity on port 1	
	L/D2	Green	Link/Data activity on port 2	
Power inverter power system	RDY	Green	Ready	see "RDY, RUN, ERR (8BVI, 8BVP, 8B0P) - LED status indicators" on page 6
	RUN	Orange	Run	
	ERR	Red	Error	
Power supply	24 V	Green	24 V OK	The 24 V internal system power supply is higher than the minimum permissible value and/or the 24 V internal module voltage supply is within the tolerance range [1)]

Table 3: 8B0P power supply modules - LED status indicators

1) 8B0P power supply modules have an internal power supply that generates 24 VDC directly from the mains input voltage for module-internal purposes. If the 24 VDC generated in the module is properly applied, LED "24 V" is lit.
It is therefore possible that LED "24 V" is lit although the 24 VDC internal system voltage generated by the 24 VDC 8B0C auxiliary supply module is not present via the mounting plate on power supply module 8BxP. This is the case, for example, if the 24 VDC 8B0C auxiliary supply module of the ACOPOSmulti drive system is defective or has no electrical contact to the mounting plate.

4.2 LED status ERROR

The following intervals are used for the LED status indicators:

Block size: 500 ms
Repeats after: 3,000 ms

Status	LED	Display
Charging resistor overtemperature	RDY	
	RUN	
	ERR	

Module not configured in Automation Studio

The following intervals are used for the LED status indicators:

Block size: 50 ms
Repeats after: 3,000 ms

Status	LED	Display
Module not configured in Automation Studio	RDY	
	RUN	
	ERR	

4.3 RDY, RUN, ERR (8BVI, 8BVP, 8B0P) - LED status indicators

Label	Color	Function	Description	
RDY	Green	Ready	Solid green	The module is operational and the power stage can be enabled (operating system present and booted, no permanent or temporary errors).
			Blinking green [1]	The module is not ready for operation. **Examples:** • No signal on one or both enable inputs • DC bus voltage outside the tolerance range • Overtemperature on the motor (temperature sensor) • Motor feedback not connected or defective • Motor temperature sensor not connected or defective • Overtemperature on the module (IGBT junction, heat sink, etc.) • Disturbance on network
RUN	Orange	Run	Solid orange	The module's power stage is enabled.
ERR	Red	Error	Solid red [1]	There is a permanent error on the module. **Examples:** • Permanent overcurrent • Invalid data in EPROM
			Blinking red	• LED status "Status changes when starting up the operating system loader" on page 7

Table 4: RDY, RUN, ERR (8BVI, 8BVP, 8B0P) - LED status indicators

1) Firmware V2.130 and later.

Information:

The ACOPOSmulti drive system has no way of detecting whether the fans in the fan modules of the mounting plate or the module-internal fans are actually rotating.

4.4 POWERLINK - LED status indicators

Label	Color	Function	Description	
R/E	Green/Red	Ready/Error	LED off	The module is not supplied with power or network interface initialization has failed.
			Solid red	The POWERLINK node number of the module is 0.
			Blinking red/green	The client is in an error state (drops out of cyclic operation).
			Blinking green (1x)	The client detects a valid POWERLINK frame on the network.
			Blinking green (2x)	Cyclic operation on the network is taking place, but the client itself is not yet a participant.
			Blinking green (3x)	Cyclic operation of the client is in preparation.
			Solid green	The client is participating in cyclic operation.
			Flickering green	The client is not participating in cyclic operation and also does not detect any other stations on the network participating in cyclic operation.
L/D1	Green	Link/Data activity Port 1	Solid green	A physical connection has been established to another station on the network.
			Blinking green	Activity on port 1
L/D2	Green	Link/Data activity Port 2	Solid green	A physical connection has been established to another station on the network.
			Blinking green	Activity on port 2

Table 5: POWERLINK - LED status indicators

4.5 Backup battery - LED status indicators

Label	Color	Function	Description	
BAT	Green/Red	Ready/Error	LED off	**Possible causes:** • The voltage of the installed backup battery is within the tolerance range, but an EnDat encoder with backup battery is not connected. • An EnDat encoder with backup battery is connected and registering "Battery OK", but the module's firmware version does not support EnDat encoders with battery backup.
			Solid green	An EnDat encoder with battery backup is connected and registering "Battery OK" (voltage of the installed backup battery is within the tolerance range).
			Solid red	An EnDat encoder with battery backup is connected and registering "Battery not OK". **Possible causes:** • Voltage of the installed backup battery outside of tolerance range • No backup battery installed in module

Table 6: Backup battery - LED status indicators

4.6 Status changes when starting up the operating system loader

The following intervals are used for the LED status indicators:

Width of box: 50 ms
Repeats after: 3,000 ms

Status	LED	Display
1. Boot procedure for base hardware active	RDY	
	RUN	
	ERR	
2. Network configuration active	RDY	
	RUN	
	ERR	
3. Waiting for network telegram	RDY	
	RUN	
	ERR	
4. Network communication active	RDY	
	RUN	
	ERR	
5. ACOPOS operating system being transferred/burned [1]	RDY	
	RUN	
	ERR	

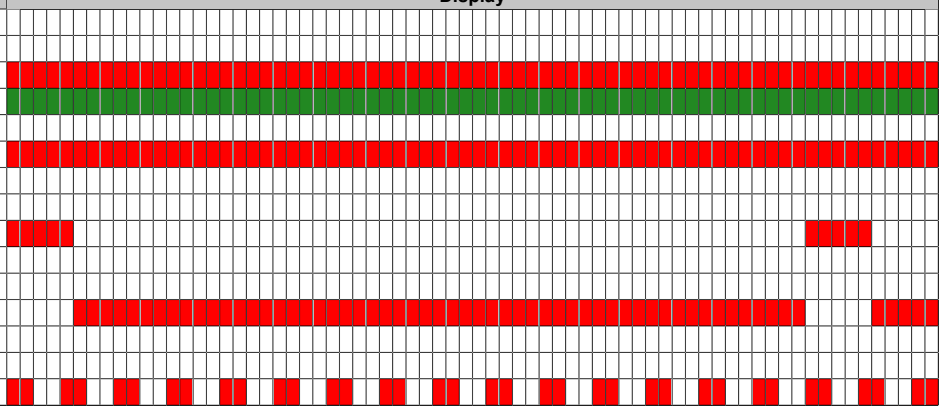

Table 7: Status changes when starting up the operating system loader

1) Firmware V2.140 and later.

5 Dimension diagram and installation dimensions

5.1 Cold plate

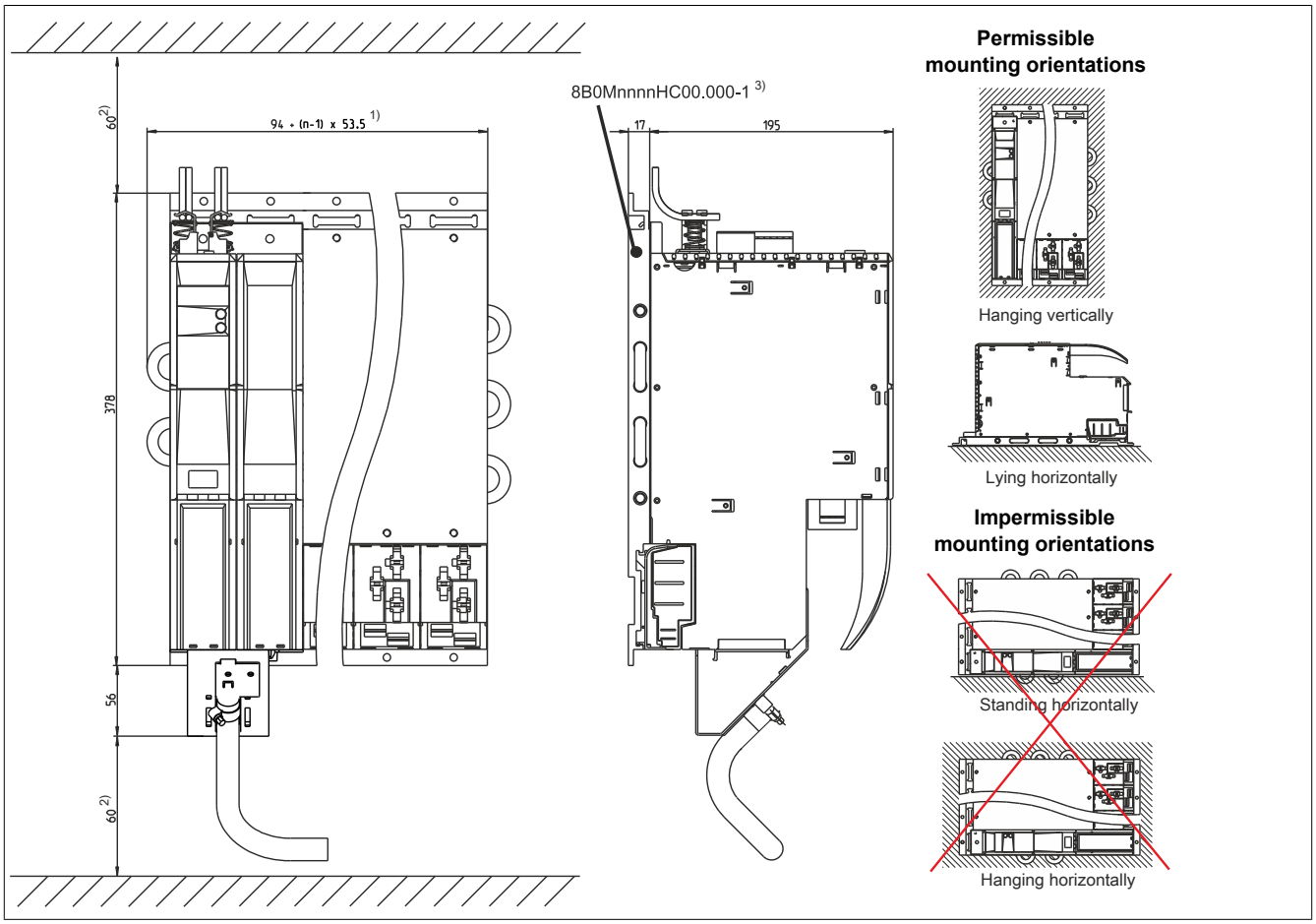

Figure 2: Cold plate - Dimension diagram and installation dimensions

1) n... Number of width units on the mounting plate
2) For sufficient air circulation, a clearance of at least 60 mm must be provided above the mounting plate and below the module.
3) nnnn indicates the number of slots (e.g. 0160 refers to 16 slots).

Information:

When mounting ACOPOSmulti modules for cold-plate or feed-through mounting, be sure not to scratch the backplane. This can impair thermal dissipation to the mounting plate.

Do not set down ACOPOSmulti modules for cold-plate or feed-through mounting on their bottom side. Doing so could break the clips that hold the unit is fan. Broken clips make it more difficult to replace the fans later on.

5.2 Feed-through mounting

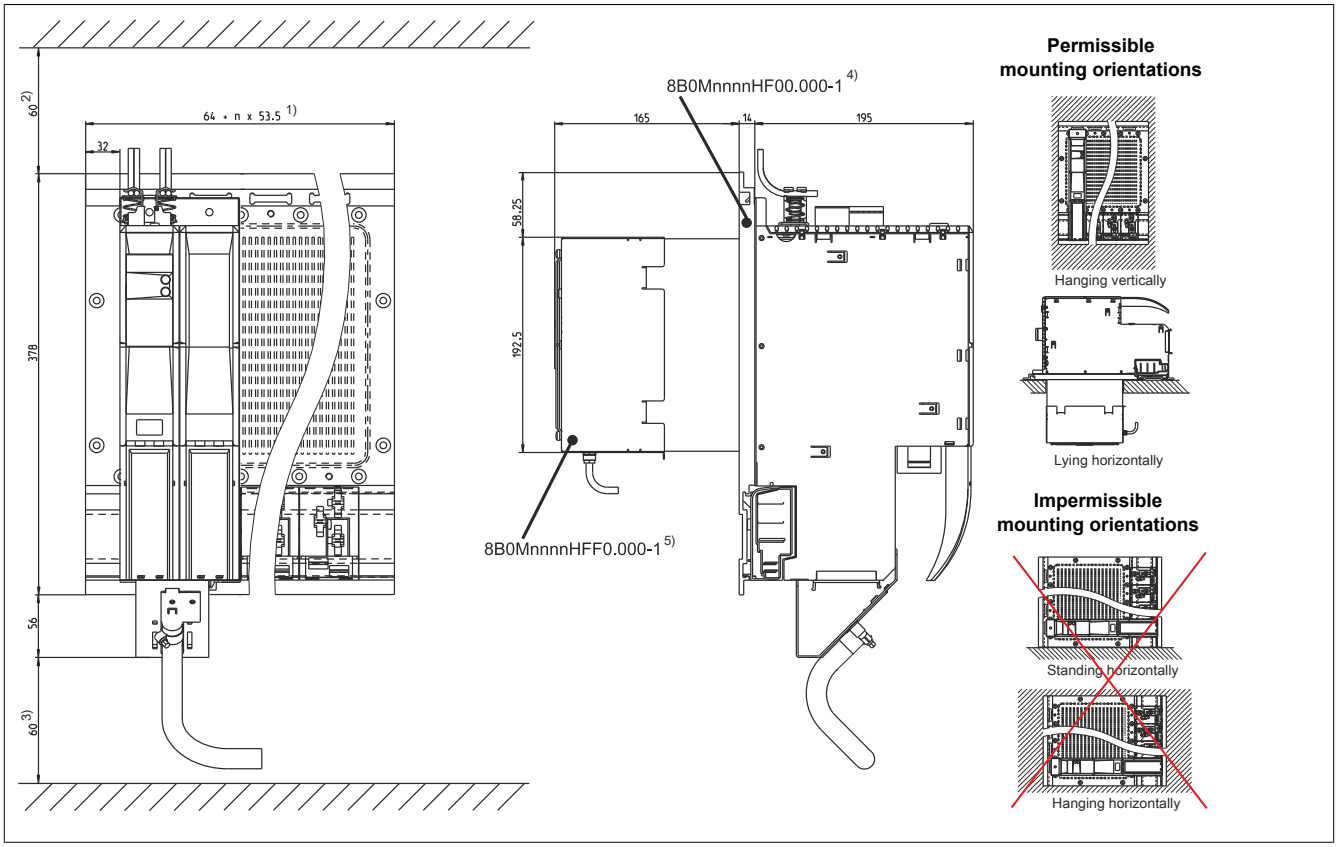

Figure 3: Feed-through mounting - Dimension diagram and installation dimensions

1) n... Number of width units on the mounting plate
2) For sufficient air circulation, a clearance of at least 60 mm must be provided above the mounting plate and below the module.
3) The required spacing to the wiring on the bottom of the module depends on the power cable being used.
4) nnnn indicates the number of slots (e.g. 0160 refers to 16 slots).
5) For sufficient air circulation, a clearance of at least 100 mm must be provided around the fan module.

Information:

When mounting ACOPOSmulti modules for cold-plate or feed-through mounting, be sure not to scratch the backplane. This can impair thermal dissipation to the mounting plate.

Do not set down ACOPOSmulti modules for cold-plate or feed-through mounting on their bottom side. Doing so could break the clips that hold the unit is fan. Broken clips make it more difficult to replace the fans later on.

6 Wiring

6.1 Pinout overview

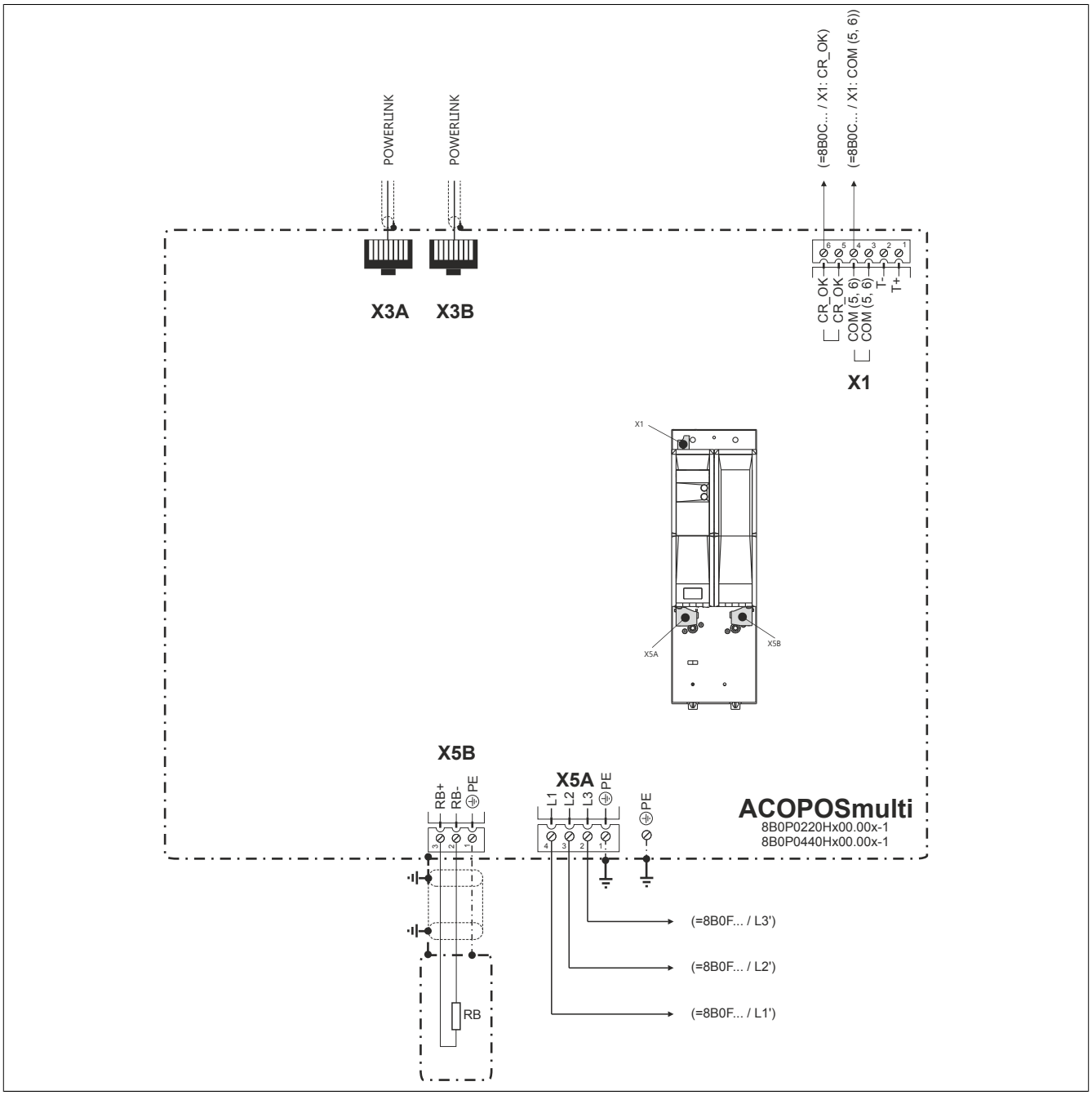

Figure 4: 8B0P0220Hx00.00x-1, 8B0P0440Hx00.00x-1 - Pinout overview

6.2 Connector X1 - Pinout

X1	Pin	Description	Function
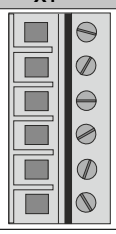	1	T+	Temperature sensor +
	2	T-	Temperature sensor -
	3	COM (5, 6)	Activation/Enable 8B0C/8B0K3630 0 V
	4	COM (5, 6)	Activation/Enable 8B0C/8B0K3630 0 V
	5	CR_OK [1)]	Activation/Enable 8B0C/8B0K3630
	6	CR_OK [1)]	Activation/Enable 8B0C/8B0K3630

Table 8: Connector X1 - Pinout

1) Output CR_OK (activation/approval 8B0C/8B0K3630) is set as soon as the charging relay is closed and the DC bus voltage UDC > 270 VDC.

Danger!

The connections for the temperature sensors are safely isolated circuits. These connections are therefore only permitted to be connected to devices or components that have sufficient isolation per IEC 60364-4-41 or EN 61800-5-1.

6.3 Connectors X3A, X3B - Pinout

X3A, X3B	Pin	Description	Function
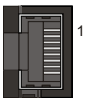	1	RXD	Receive signal
	2	RXD\	Receive signal inverted
	3	TXD	Transmit signal
	4	Shield	Shield
	5	Shield	Shield
	6	TXD\	Transmit signal inverted
	7	Shield	Shield
	8	Shield	Shield

Table 9: X3A, X3B connectors - Pinout

6.4 Connector X5A - Pinout

X5A	Description	Function
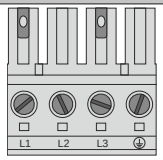	PE	Power system: Protective ground conductor
	L3	Power system: Mains connection L3
	L2	Power system: Mains connection L2
	L1	Power system: Mains connection L1

Table 10: Connector X5A - Pinout

6.5 Connector X5B - Pinout

X5B	Description	Function
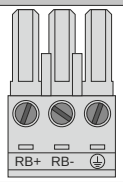	PE	Protective ground conductor
	RB-	Braking resistor -
	RB+	Braking resistor +

Table 11: X5B - Pinout

Danger!

Before switching on the module, it is important to make sure that the housing is properly connected to ground (PE rail). Ground connections must also be established if the module is connected for test purposes or only being operated for a short period of time!

6.6 Additional protective ground connection (PE)

The protective ground conductor is secured to the M5 threaded bolt provided for this purpose using a cable lug.

Figure	Pin	Description	Function
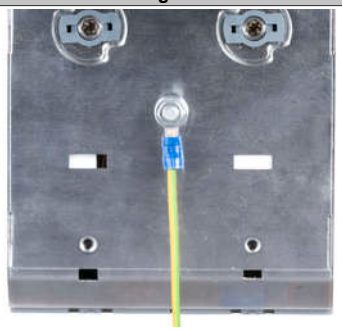	---	PE	Protective ground conductor

Terminal cross section	[mm²]	AWG
Cable lug for M5 threaded bolt	0.25 - 16	23 - 5

Table 12: Additional protective ground connection (PE)

6.7 Input/Output circuit diagram

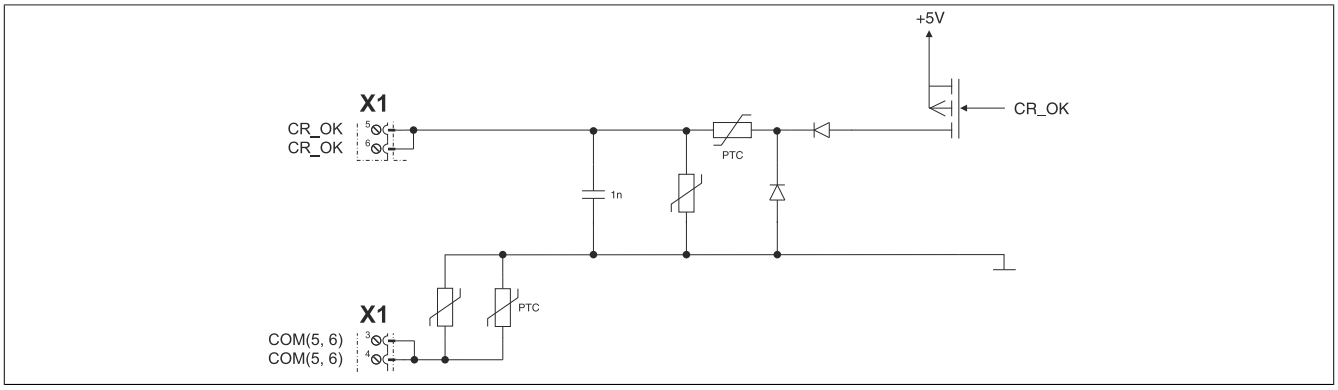

Figure 5: 8B0C - Enable

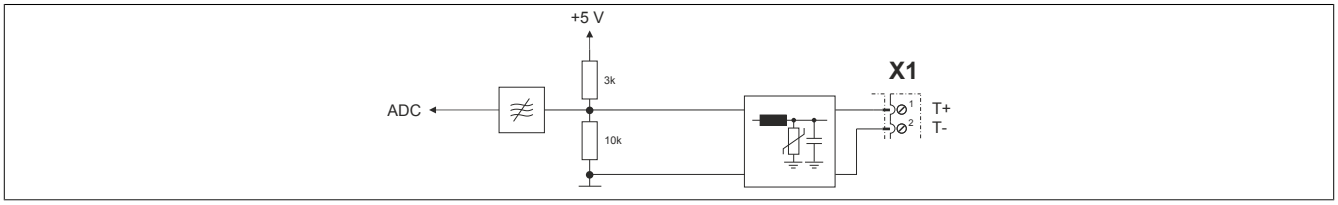

Figure 6: Temperature sensor

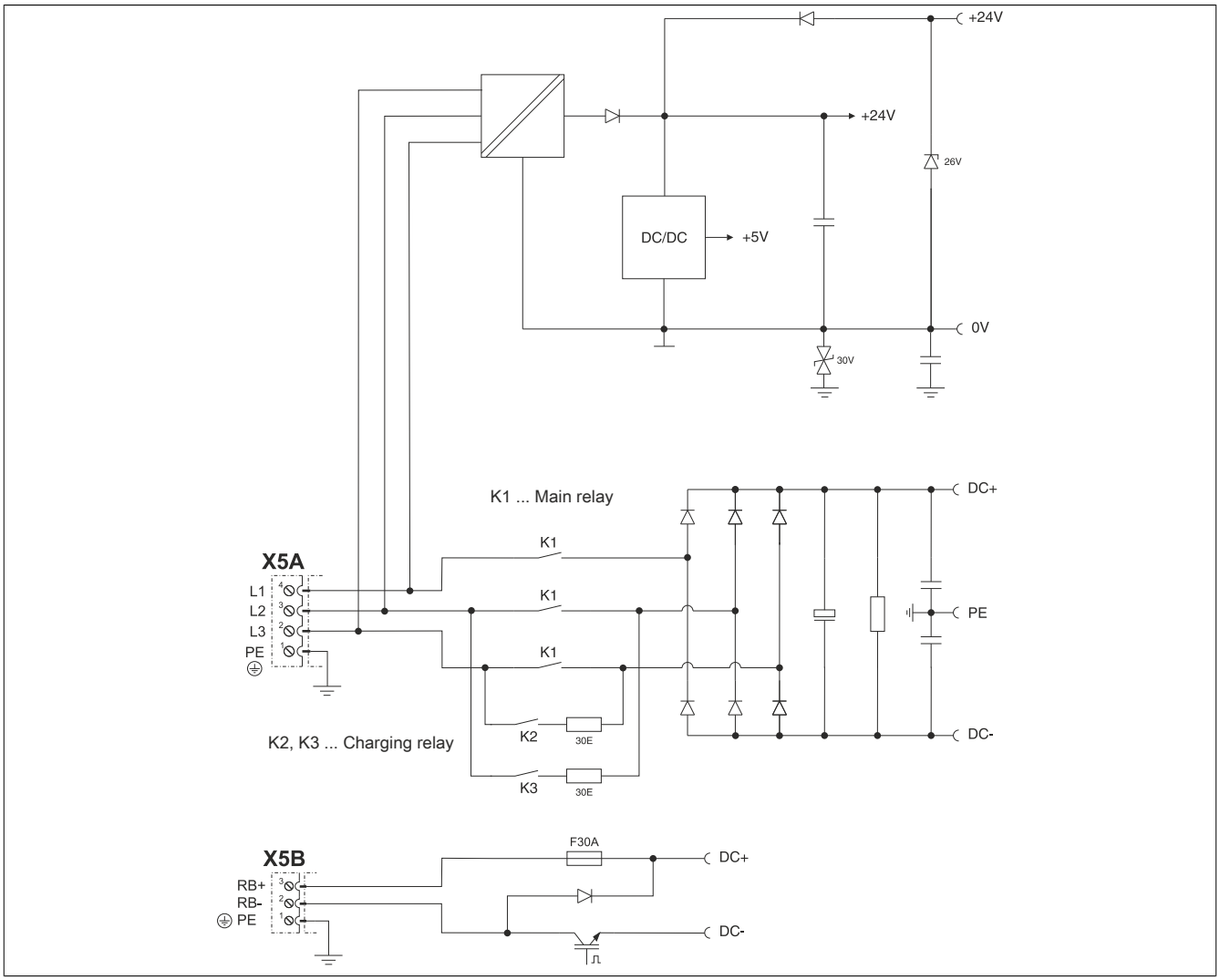

Figure 7: Power unit 8B0P0220Hx00.000-1, 8B0P0440Hx00.000-1

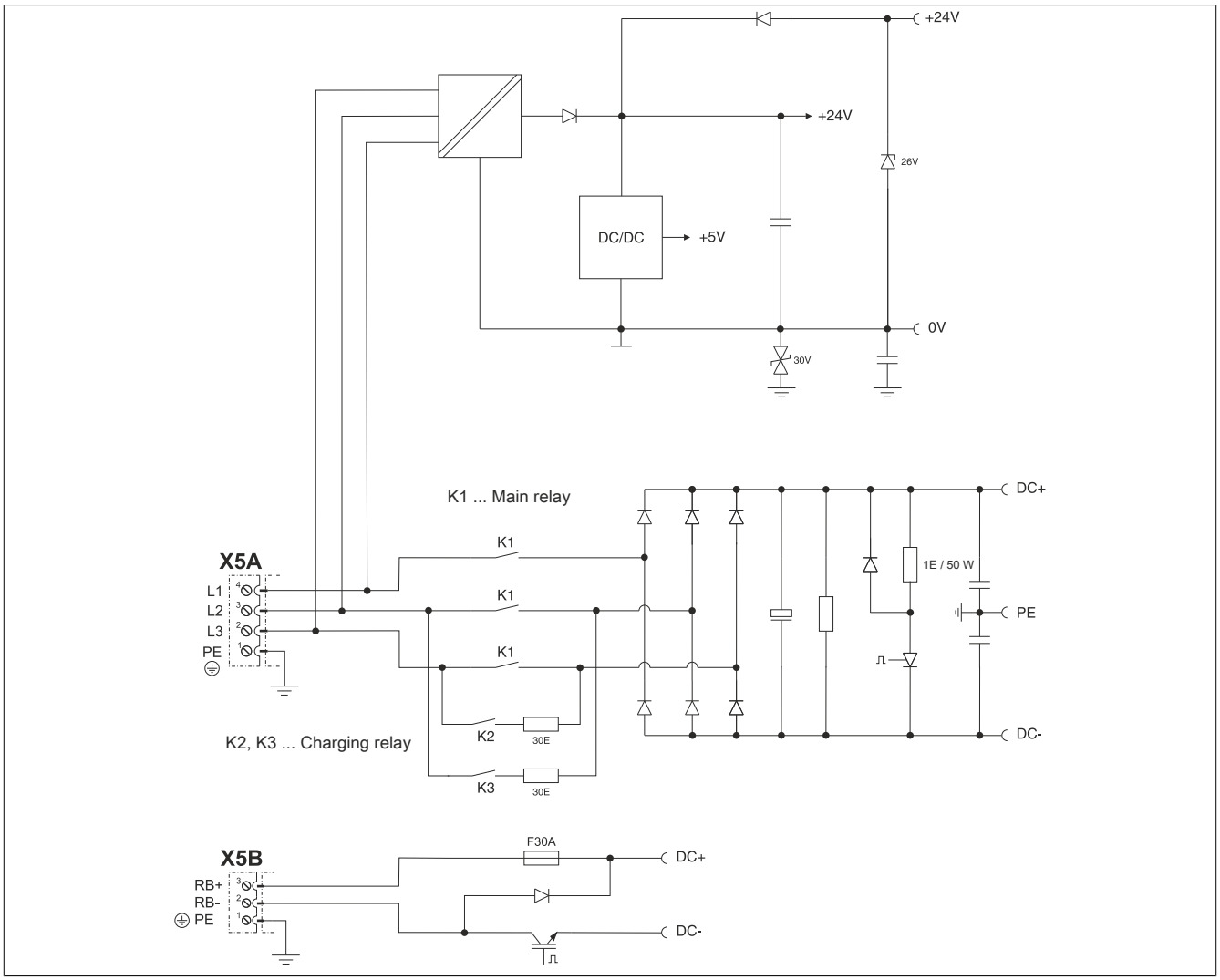

Figure 8: Power unit 8B0P0220Hx00.001-1, 8B0P0440Hx00.001-1

6.8 POWERLINK node number setting

The POWERLINK node number can be set using the two hexadecimal coded rotary switches located behind the module's black cover.

<table>
<tr><th colspan="2">Figure</th><th>Coded rotary switches</th><th>POWERLINK node number</th></tr>
<tr><td rowspan="3">

Cover closed</td><td rowspan="3">

Cover open</td><td>1</td><td>16s position (high)</td></tr>
<tr><td>2</td><td>1s position (low)</td></tr>
<tr><td colspan="2">A change to the POWERLINK node number only takes effect the next time the ACOPOSmulti drive system is switched on.
Information:
In principle, node numbers between $01 and $FD are permitted.
However, node numbers between $F0 and $FD are intended for future system expansions. To ensure compatibility, these node numbers should be avoided.
Node numbers $00, $FE and $FF are reserved and are therefore not permitted to be set.</td></tr>
</table>

Table 13: Setting the POWERLINK node number