BOLT INTERLOCKS (in Stainless Steel 316)

SS-BS



Sales Number	BOLT INTERLOCK SINGLE KEY STAINLESS STEEL 316
SS-BS	Key trapped - bolt retracted

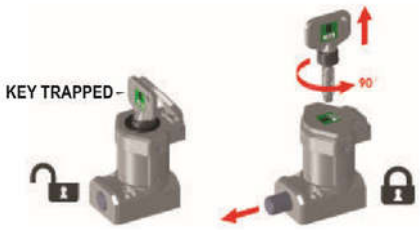

SS-BD-11



Sales Number	BOLT INTERLOCK DUAL KEY STAINLESS STEEL 316
SS-BD-11	2 keys - 1 key trapped 1 key free - bolt retracted



Sales Number	BOLT INTERLOCK DUAL KEY STAINLESS STEEL 316
SS-BD-20	2 keys trapped - bolt retracted



BOLT INTERLOCKS (in Die Cast Metal with Mirror Polished finish)

M-BS



Sales Number	BOLT INTERLOCK SINGLE KEY DIE CAST METAL (Mirror Finish)
M-BS	Key trapped - bolt retracted

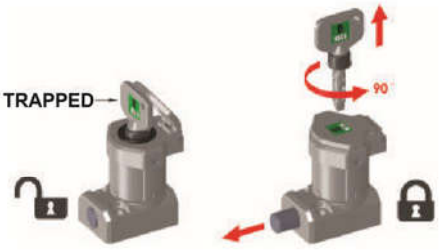

M-BD-11



Sales Number	BOLT INTERLOCK DUAL KEY DIE CAST METAL (Mirror Finish)
M-BD-11	2 keys - 1 key trapped 1 key free - bolt retracted



Sales Number	BOLT INTERLOCK DUAL KEY DIE CAST METAL (Mirror Finish)
M-BD-20	2 keys trapped - bolt retracted



Trapped Key Bolt Interlock – Types BS BD

Operating Instructions

READ AND UNDERSTAND THESE INSTRUCTIONS BEFORE INSTALLING, OPERATING, OR MAINTAINING THIS EQUIPMENT.

The product is designed to be a component of a customized safety oriented control system. It is the responsibility of the user to ensure the correct overall functionality of its systems and machines. IDEM, its subsidiaries and affiliates, are not in a position to guarantee all of the characteristics of a given system or product not designed by IDEM.

INSTALLATION: Installation must only be carried out by competent personnel and in accordance with these instructions.
Always use correct size metal mounting bolts (M6). Tightening torque 2Nm. Ensure that the holding force is sufficient to withstand the static forces applied during normal use and dynamic effects caused by bouncing of the guard shall not create an impact reaction force which exceeds the holding force. If the expected impact reaction forces are higher than the specified holding force for the switch, then design measures must be applied to avoid the force.

WARNING: THE DESIGN OF THE GUARD MUST ENSURE THAT WHEN THE BOLT IS WITHDRAWN IT CAN ONLY RETURNED TO THE LOCK POSITION WHEN THE GUARD IS IN THE PROTECTED POSITION. IT MUST NOT BE POSSIBLE TO EXPEL THE BOLT WHILST THE GUARD IS OPEN.

MAINTENANCE: Every month: If the key, housing or bolt display signs of mechanical damage then remove and replace.
IDEM will not accept responsibility for failure of the interlock functions if the installation and maintenance requirements are not implemented.
THESE INSTRUCTIONS FORM PART OF THE PRODUCT WARRANTY.

DIMENSIONS (mm)

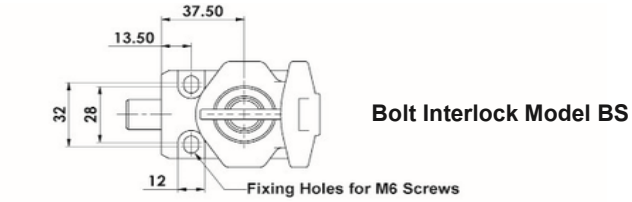

Bolt Interlock Model BS

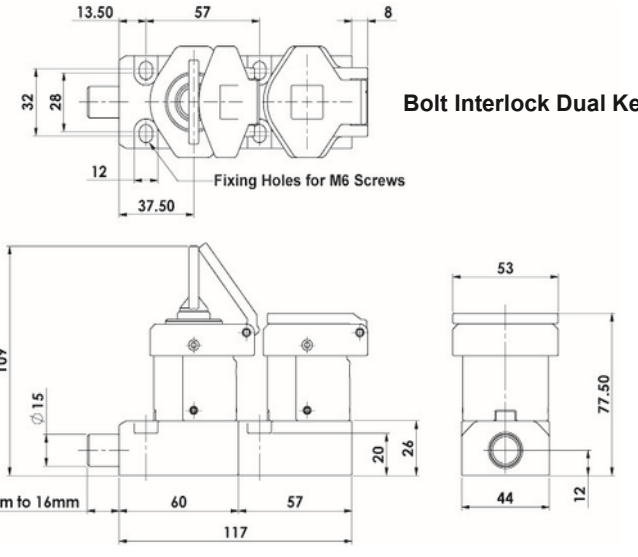

Bolt Interlock Dual Key Model BD

TECHNICAL SPECIFICATIONS

Body Material: Stainless steel or die cast
Operating Temperature: -25C. to +50C.
Holding Force: 5000N. (F1max.) 3846N. (Fzh)
Mechanical Life (B10d) : 200,000 cycles

IDEM SAFETY SWITCHES Ltd., 2 Ormside Close, Hindley Industrial Estate, Hindley Green, Wigan, WN2 4HR UK. Tel: +44 (0)1942 257070 Fax.: +44 (0)1942 257076
IDEM (USA) 4416 Technology Drive, Fremont, CA 94538 Tel:510-445-0751 Fax:1866-431-7064 email: sales@idemsafety.com Web: www.idemsafety.com Doc.102652 Oct.17