E20055

Fibre optic diffuse reflection sensor

FT-00-A-A-M6

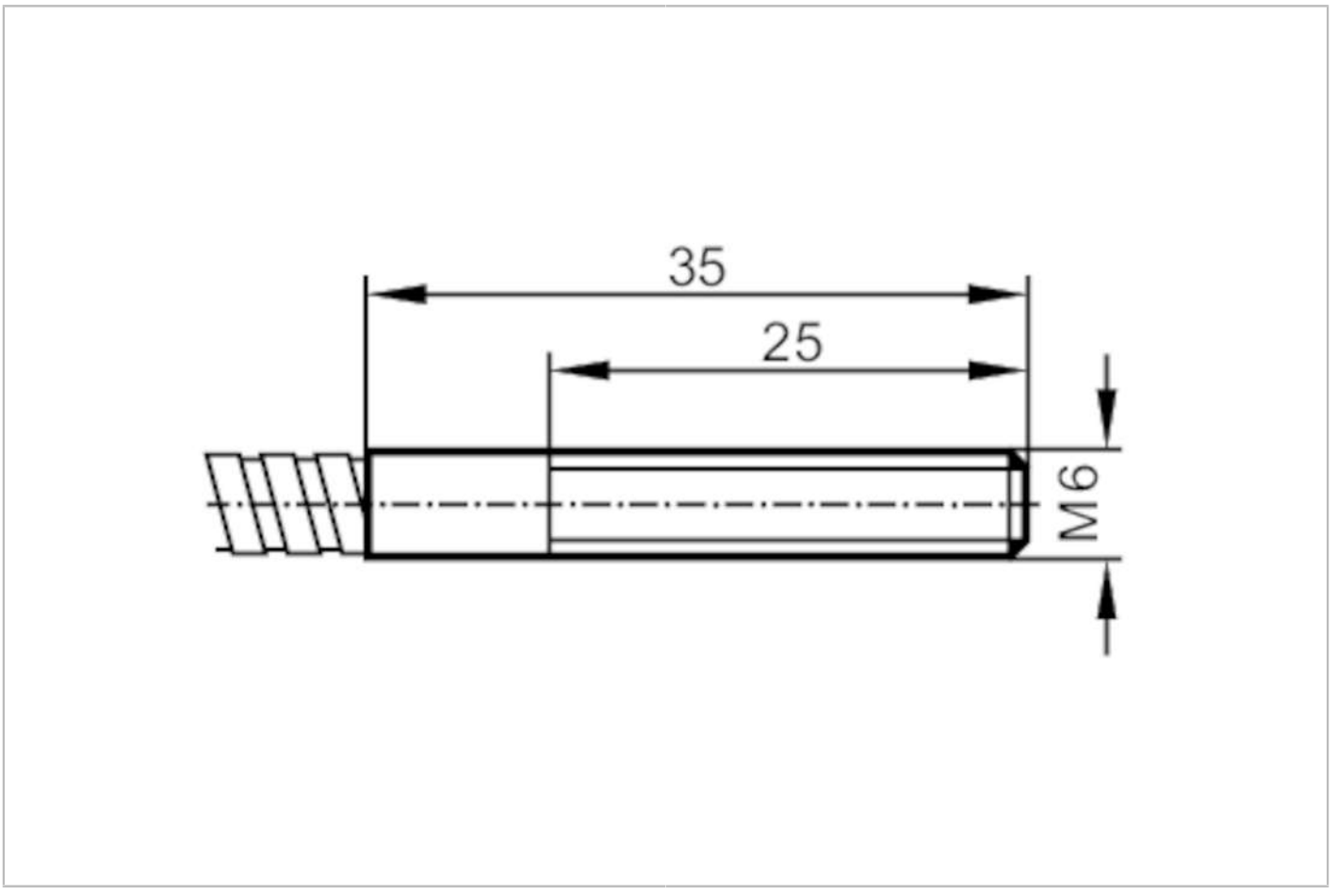

Application		
Function principle		Diffuse reflection sensor
Application		High temperature resistance; Robust design for use in harsh industrial environments
Detection zone		
Range with fibre optic amplifier type		OKF; OUF; OOF; OCF
OCF		
Range fibre optics	[mm]	330
OKF		
Range fibre optics	[mm]	40
OOF		
Range fibre optics	[mm]	200
OUF		
Range fibre optics	[mm]	40
Operating conditions		
Ambient temperature	[°C]	-40...290
Mechanical data		
Weight	[g]	48.5
Version of sensing head		straight
Sensing head thread		M6

E20055

Fibre optic diffuse reflection sensor

FT-00-A-A-M6

Total length	[mm]	600
Min. bending radius	[mm]	20; (for fixed installation)
Fibre arrangement		
Materials		Adapter: ABS
Fibre material		glass
Fibre head material		aluminium
Fibre sheath material		aluminium
Accessories		
Items supplied		hexagon nuts: 2 x M6, stainless steel
		tooth lock washers: 2
		knurled nut: 1 x M11
Remarks		
Pack quantity		1 pcs.