# HR201DS024

Slim SSR relay, 24VDC, 4A, 1 SSR contact, output 3...28VDC



| | | | |
|---|---|---|---|
| Product designation | | | SLIM RELAY |
| Product type designation | | | HR20 |
| **Contact characteristics** | | | |
| Contact configuration | | | 1 Static |
| Rated insulation voltage Ui IEC/EN | | V | 2500 (input/output) |
| IEC Conventional free air thermal current Ith | | A | 4 |
| Maximum instantaneous current | | A | 48 (10ms) |
| Rated current (In) | | A | 4 |
| Relay control voltage | | V | 24VDC |
| Max contrallable power in | | | |
| | AC-1 | W | 1500 |
| | AC-15 | VA | 360 |
| Rated operating power AC-1 | | | |
| | | VA | 4A output 3… 28VDC |
| Rated operating power AC-15 | | | |
| | 230 VAC | VA | 4A output 3… 28VDC |
| Single-phase motor control | | | |
| | 230VAC | kW | 4A output 3… 28VDC |
| Rated operating current DC-1 | | | |
| | 30V | A | 4A output 3… 28VDC |
| | 110V | A | 4A output 3… 28VDC |
| | 220V | A | 4A output 3… 28VDC |
| Minimum switching load | | V / mA | 3 / 0.02 |
| **Operating times** | | | |
| Closing | | ms | 0.3 |
| Opening | | ms | 0.3 |
| **Operations** | | | |
| Mechanical life | | cycles | Theoretically infinite |
| Electrical life AC1 | | cycles | Theoretically infinite |
| **Coil characteristics** | | | |
| Operating range | | | |
| | Closing | % Un | 80…120 |
| Maximum cycle frequency | | cycles/h | >100000 |
| **Mechanical features** | | | |
| Max socket terminal tightening torque | | Nm | 0.5 |
| Socket screw tightening tool (cross / flat blade) | | | PH0 / 3.5mm |
| Conductor section | | | |


The characteristics described in this document are subject to updates or modifications at any time. The descriptions, technical and functional information, illustrations and instructions in this brochure are purely illustrative, and are consequently not contractually binding

| | | | | |
|---|---|---|---|---|
| | AWG/Kcmil | | | |
| | | min | | 20 |
| | | max | | 16 |
| | IEC | | | |
| | | min | mm² | 0.5 |
| | | max | mm² | 1.5 |
| Operating position | | | | |
| | | normal | | Any |
| Fixing | | | | On 35mm DIN rail |

## Ambient conditions

| | | | | |
|---|---|---|---|---|
| Temperature | | | | |
| | Operating temperature | | | |
| | | min | °C | -30 |
| | | max | °C | +80 |
| | Storage temperature | | | |
| | | min | °C | -30 |
| | | max | °C | +100 |

## Other features

| | |
|---|---|
| Indication | Yes (on the socket) |
| Mechanical contact position indicator | No |
| Mechanical test actuator | No |

## Dimensions

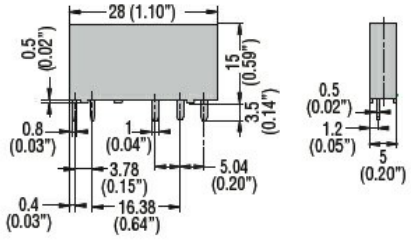


PCB layout

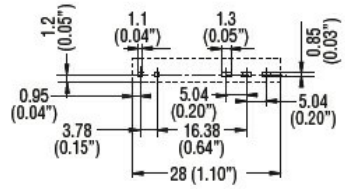


## Wiring diagrams


The characteristics described in this document are subject to updates or modifications at any time. The descriptions, technical and functional information, illustrations and instructions in this brochure are purely illustrative, and are consequently not contractually binding

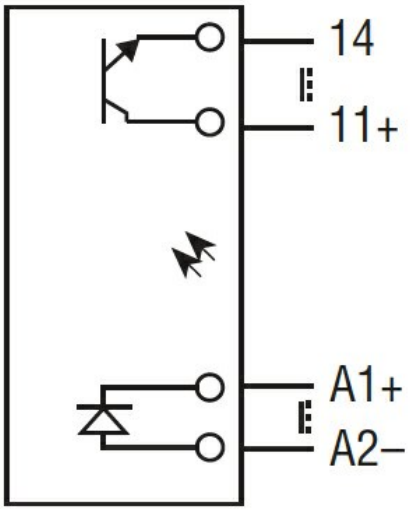


## Certifications and compliance

| | |
|---|---|
| Compliance | |
| | IEC/EN 62314 |
| Certificates | |
| | cURus |
| | TÜV-SUD |

## ETIM classification

| | |
|---|---|
| ETIM 8.0 | EC002055 - Solid state relay |


The characteristics described in this document are subject to updates or modifications at any time. The descriptions, technical and functional information, illustrations and instructions in this brochure are purely illustrative, and are consequently not contractually binding