RAFIX 16, standard switching element, silver, without lamp socket, quick-connect terminal, latching, 2 NO



fields of application

- Measurement-control-regulation
- Electrical engineering
- Mechanical and system engineering
- Industrial robots

special features

- Suitable for pushbuttons, mushroom pushbuttons and toggle switches
- Silver contacts, optimal for switching large currents (max. 250 V / 6 A)
- Optional with latching function for visible switch function
- Mounting by snapping onto actuator
- Disassembly by turning and pulling off
- Flat plug-in connections 2.8 x 0.8 mm (also with PCB plug-in base) or screw connection

description

RAFIX 16 standard switching elements are designed for pushbuttons. The switching elements are available with a momentary contact or latching function, so that latching pushbuttons can also be achieved.

technical data

general

Color	light gray
Operating temperature, min.	-25 °C
Operating temperature, max.	70 °C
Storage temperature, min.	-40 °C
Storage temperature, max.	85 °C
illuminated	No
Packaging unit	20 pcs.
net weight	9 g
Operating life	1,000,000 cycles
B10	1,300,000 cycles
Environment resistance	IEC 60068-2-14 IEC 60068-2-30 IEC 60068-2-33 IEC 60068-2-78
Shock resistance according to standard IEC 60068-2-27	50 g at 11 ms amplitude semi-sinusoidal
Vibration resistance according to standard IEC 60068-2-6	10 g at 20 - 500 Hz
Protection class	II
MOQ order	20 pcs.

direct links

- RAFI eCatalog

The information in this data sheet only contains general descriptions and / or performance features, which may not apply precisely as described to the respective application, and which my change due to further product enhancements. The technical data, illustrations and other information about our products are the mere results of individual technical testing. These descriptions and other product features are only binding if they expressly agreed upon at the time of the conclusion of a binding contract. In all other cases, we reserve the right to make technical changes as well as changes of availability. Pictures and other graphic illustrations are approximations only. All product names may be trademarks or brand names of the RAFI Group or any other sub-supplier of RAFI. The use of such by any third parties for their own purposes may infringe the rights of the respective entity holding those rights.

RAFI GmbH & Co. KG

Ravensburger Str. 128-134
88276 Berg / Ravensburg
Germany
www.rafi-group.com,
info.headquarters@rafi-group.com

RoHS compliant	Yes
REACH compliant	Yes
mounting diameters	
Outside dimension, length	22.2 mm
Outside dimension, width	22.2 mm
Outside dimension, height	34.4 mm
Mounting depth	44.7 mm
mechanical data	
Actuation function	latching
Operating force, max.	100 N
Operating travel, max.	3 mm
Contact function	2 NO
Contact system	Bridge contact
Contact material	Silver
Fixing	Latching
Solderability	No
Terminal on the rear	Flat quick-connect terminal 2.8 x 0.8
Connection marking	Normally Open: 13/14, 23/24
electrical data	
Rated insulation voltage	250 V
Rated surge voltage	2,500 V
Rated operating voltage	250 V (AC-15) 250 V / 125 V / 60 V / 24 V (DC-13)
Rated voltage, min.	10 V
Rated voltage, max.	250 V
Voltage type	AC / DC
Rated operating current I, AC15 B300	240 V / 1,5 A
Rated operating current I, DC13 Q300	250 V / 0,275 A 125 V / 0,4 A 60 V / 1 A 24 V / 2 A
Rated operating voltage	10-250 V
Power loss	1.44000 W
Category of use AC-15 / B300	250 V / 1,5 A (CCC)
Categories of use	AC-15 / B300 DC-13 / Q300
Category of use DC-13 / Q300	240 V / 0,27 A (CCC)

The information in this data sheet only contains general descriptions and / or performance features, which may not apply precisely as described to the respective application, and which my change due to further product enhancements. The technical data, illustrations and other information about our products are the mere results of individual technical testing. These descriptions and other product features are only binding if they expressly agreed upon at the time of the conclusion of a binding contract. In all other cases, we reserve the right to make technical changes as well as changes of availability. Pictures and other graphic illustrations are approximations only. All product names may be trademarks or brand names of the RAFI Group or any other sub-supplier of RAFI. The use of such by any third parties for their own purposes may infringe the rights of the respective entity holding those rights.

RAFI GmbH & Co. KG

Ravensburger Str. 128-134
88276 Berg / Ravensburg
Germany
www.rafi-group.com,
info.headquarters@rafi-group.com

drawings

System drawing

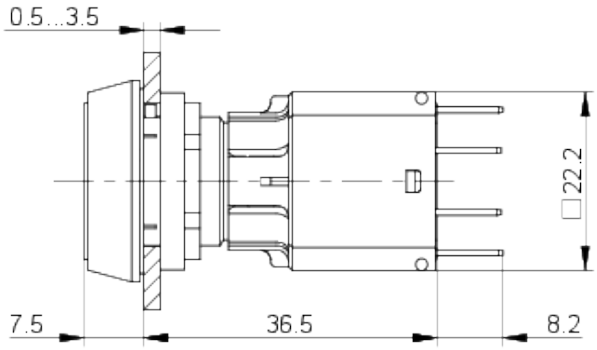

The information in this data sheet only contains general descriptions and / or performance features, which may not apply precisely as described to the respective application, and which my change due to further product enhancements. The technical data, illustrations and other information about our products are the mere results of individual technical testing. These descriptions and other product features are only binding if they expressly agreed upon at the time of the conclusion of a binding contract. In all other cases, we reserve the right to make technical changes as well as changes of availability. Pictures and other graphic illustrations are approximations only. All product names may be trademarks or brand names of the RAFI Group or any other sub-supplier of RAFI. The use of such by any third parties for their own purposes may infringe the rights of the respective entity holding those rights.

RAFI GmbH & Co. KG

Ravensburger Str. 128-134
88276 Berg / Ravensburg
Germany
www.rafi-group.com,
info.headquarters@rafi-group.com