ISO 15552, series PRA



AVENTICS™ ISO 15552, series PRA

EMERSON.

Profile cylinder ISO 15552, PRA series

- Ø 32-125 mm
- Ports G 1/8 G 1/4 G 3/8 G 1/2
- double-acting
- with magnetic piston
- Cushioning pneumatically adjustable
- Piston rod External thread
- ATEX optional



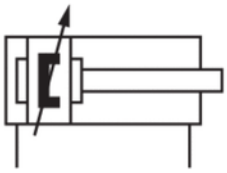

Standards	ISO 15552
Certificates	ATEX optional
Compressed air connection	Internal thread
Working pressure min./max.	1.5 ... 10 bar
Ambient temperature min./max.	-20 ... 80 °C
Medium temperature min./max.	-20 ... 80 °C
Medium	Compressed air
Max. particle size	50 µm
Oil content of compressed air	0 ... 5 mg/m³
Pressure for determining piston forces	6.3 bar

Technical data

Piston Ø Piston rod thread Ports Piston rod Ø	32 mm M10x1,25 G 1/8 12 mm	40 mm M12x1,25 G 1/4 16 mm	50 mm M16x1,5 G 1/4 20 mm	63 mm M16x1,5 G 3/8 20 mm	80 mm M20x1,5 G 3/8 25 mm	100 mm M20x1,5 G 1/2 25 mm
Stroke 25	0822120001	0822121001	0822122001	0822123001	0822124001	0822125001
50	0822120002	0822121002	0822122002	0822123002	0822124002	0822125002
80	0822120003	0822121003	0822122003	0822123003	0822124003	0822125003
100	0822120004	0822121004	0822122004	0822123004	0822124004	0822125004
125	0822120005	0822121005	0822122005	0822123005	0822124005	0822125005
160	0822120006	0822121006	0822122006	0822123006	0822124006	0822125006
200	0822120007	0822121007	0822122007	0822123007	0822124007	0822125007
250	0822120008	0822121008	0822122008	0822123008	0822124008	0822125008
320	0822120009	0822121009	0822122009	0822123009	0822124009	0822125009
400	0822120010	0822121010	0822122010	0822123010	0822124010	0822125010
500	0822120011	0822121011	0822122011	0822123011	0822124011	0822125011

Piston Ø Piston rod thread Ports Piston rod Ø	125 mm M27x2 G 1/2 32 mm
Stroke 25	R480140491
50	R480140455
80	R480141371
100	R480079499
125	R480140083
160	R480079809
200	R480140833
250	R480141106
320	R480140759
400	R480141373
500	R480141666

Technical data

Piston Ø	32 mm	40 mm	50 mm	63 mm	80 mm	100 mm	125 mm
Retracting piston force	435 N	660 N	1035 N	1765 N	2855 N	4635 N	7220 N
Extracting piston force	505 N	790 N	1235 N	1960 N	3165 N	4945 N	7725 N
Cushioning length	16.5 mm	19 mm	17 mm	16.5 mm	19.5 mm	19.5 mm	22 mm
Cushioning energy	4.8 J	9 J	15 J	27 J	54 J	88 J	140 J
Weight 0 mm stroke	0.5 kg	0.65 kg	1.06 kg	1.42 kg	2.37 kg	3.51 kg	6.72 kg
Weight +10 mm stroke	0.022 kg	0.032 kg	0.047 kg	0.054 kg	0.085 kg	0.1 kg	0.15 kg
Stroke max.	1600 mm	1900 mm	2100 mm	2500 mm	2800 mm	2800 mm	2750 mm

Technical information

The pressure dew point must be at least 15 °C under ambient and medium temperature and may not exceed 3 °C .
The oil content of compressed air must remain constant during the life cycle.
Use only the approved oils from AVENTICS. Further information can be found in the “Technical information” document (available in the MediaCentre).

ATEX-certified cylinders with identification II 2G Ex h IIB T4 Gb / II 2D Ex h IIIB T135°C Db_X can be generated in the Internet configurator.
The operating temperature range for ATEX-certified cylinders is -20 °C ... 50 °C.

Technical information

Material	
Cylinder tube	Aluminum, anodized
Piston rod	Stainless steel
Front cover	Die-cast aluminum
End cover	Die-cast aluminum
Seal	Polyurethane
Nut for piston rod	Steel, galvanized
Scraper	Polyurethane

Dimensions

Dimensions

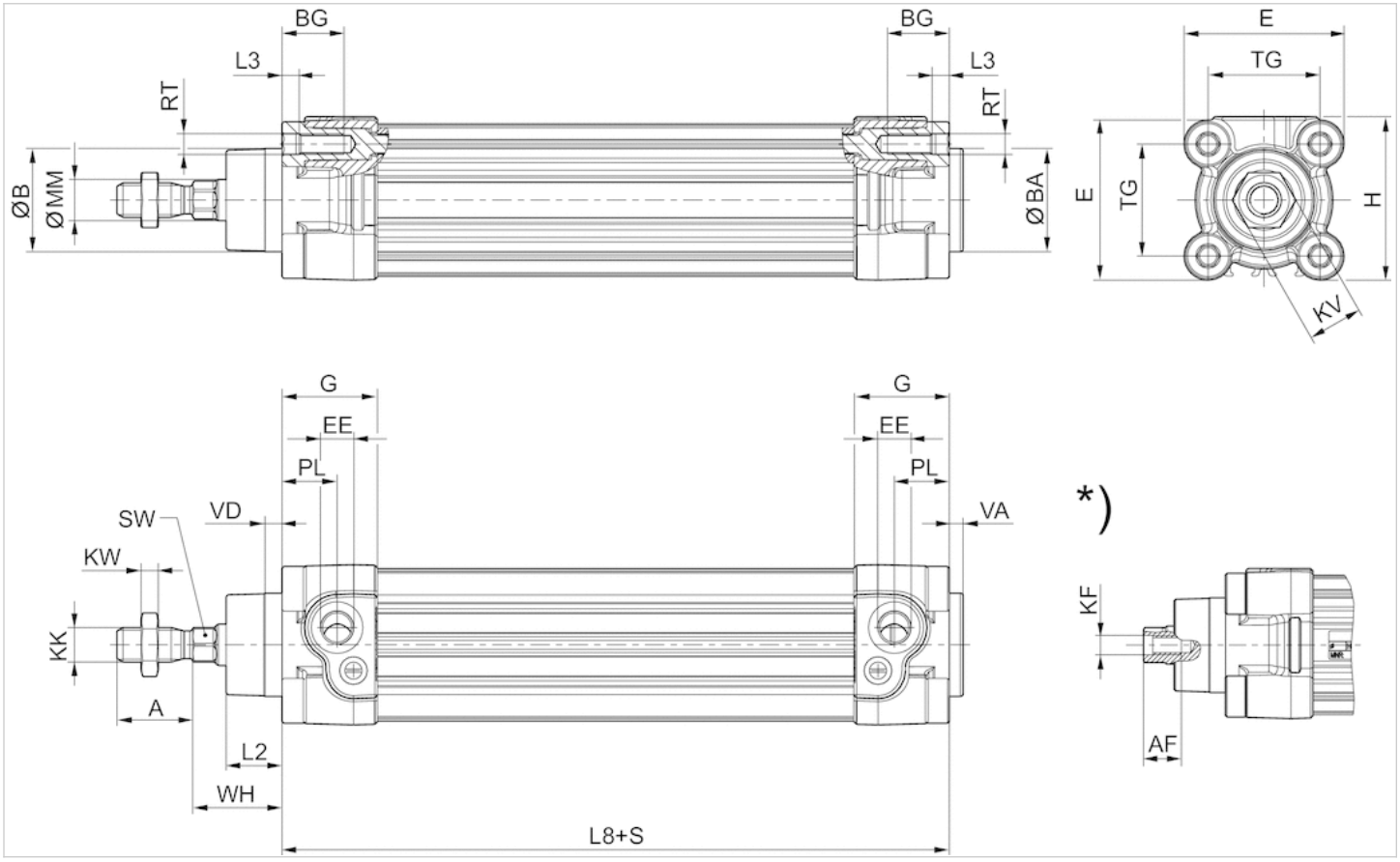

S = stroke

*) For cylinders with optional piston road with internal thread

Dimensions

Piston Ø	A -2	AF+1	ØB d11	ØBA d11	BG min.	E	EE	G	H	KF	KK	KV	KW
32 mm	22	12	30	30	16	46.5	G 1/8	27.75	47.5	M6	M10x1,25	16	5
40 mm	24	13.5	35	35	16	53	G 1/4	33.25	53	M8	M12x1,25	18	6
50 mm	32	17	40	40	16	65	G 1/4	31	65	M10	M16x1,5	24	8
63 mm	32	17	45	45	16	75	G 3/8	38.25	75	M10	M16x1,5	24	8
80 mm	40	21	45	45	17	95	G 3/8	38.25	95	M12	M20x1,5	30	10
100 mm	40	21	55	55	17	115	G 1/2	42.25	115	M12	M20x1,5	30	10
125 mm	54	28	60	60	20	140	G 1/2	53.85	140	M16	M27x2	41	13.5

Piston Ø	ØMM f8	PL	L2	L3 ±0,5	L8	RT	SW	TG	VA -1	VD	WH
32 mm	12	16	16.25	4.5	94±0,4	M6	10	32,5±0,5	4	5	26±1,4
40 mm	16	20	18.25	4.5	105±0,7	M6	13	38±0,5	4	5	30±1,4
50 mm	20	19	25	4.5	106±0,7	M8	17	46,5±0,6	4	5	37±1,4
63 mm	20	24	25	4.5	121±0,8	M8	17	56,5±0,7	4	5	37±1,8
80 mm	25	23.5	33	0	128±0,8	M10	22	72±0,7	4	5	46±1,8
100 mm	25	25	36	0	138±1	M10	22	89±0,7	4	5	51±1,8
125 mm	32	33	45	0	160±1	M12	27	110±1,1	6	7	65±2,2

Diagrams

Cushioning diagram

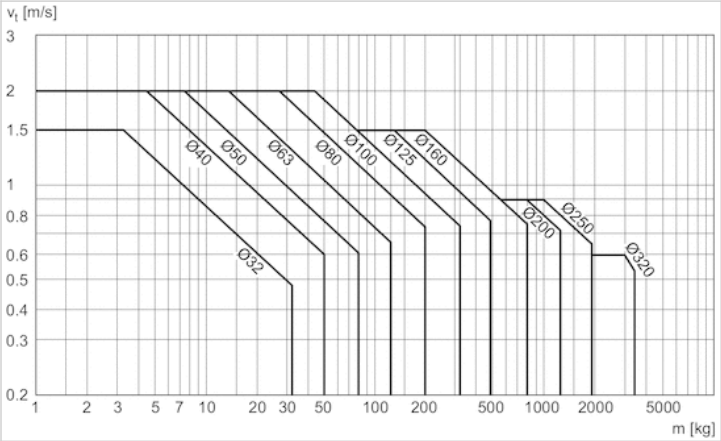

v = Piston velocity [m/s]
m = Cushionable mass [kg]

Accessories overview

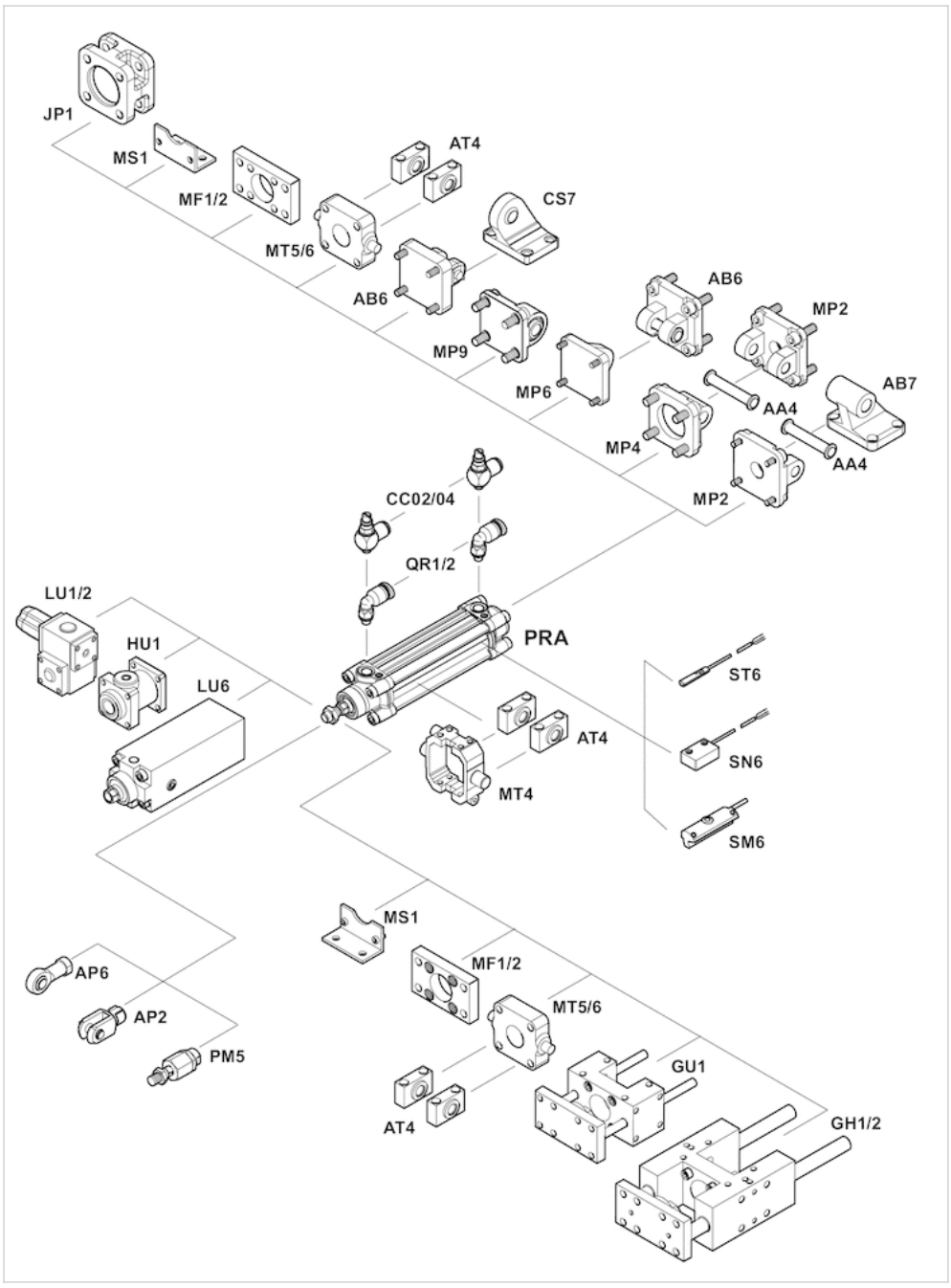

Profile cylinder ISO 15552, PRA series

- Ø 32-125 mm
- Ports G 1/8 G 1/4 G 3/8 G 1/2
- double-acting
- with magnetic piston
- Cushioning elastic
- Piston rod External thread



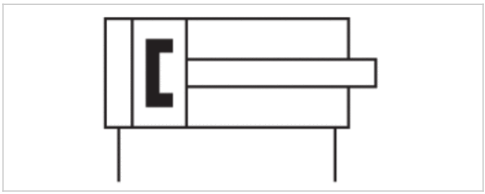

Standards	ISO 15552
Compressed air connection	Internal thread
Working pressure min./max.	1.5 ... 10 bar
Ambient temperature min./max.	-20 ... 80 °C
Medium temperature min./max.	-20 ... 80 °C
Medium	Compressed air
Max. particle size	50 µm
Oil content of compressed air	0 ... 5 mg/m³
Pressure for determining piston forces	6.3 bar

Technical data

Piston Ø Piston rod thread Ports Piston rod Ø	32 mm M10x1,25 G 1/8 12 mm	40 mm M12x1,25 G 1/4 16 mm	50 mm M16x1,5 G 1/4 20 mm	63 mm M16x1,5 G 3/8 20 mm	80 mm M20x1,5 G 3/8 25 mm	100 mm M20x1,5 G 1/2 25 mm
Stroke 25	R480041555	R480041559	R480041563	R480041567	R480041573	R480041577
50	R480041556	R480041560	R480041564	R480041568	R480041574	R480041578
80	R480041557	R480041561	R480041565	R480041569	R480041575	R480041579
100	R480041558	R480041562	R480041566	R480041570	R480041576	R480041580
125	R480151537	R480051376	R480045537	R480054955	R480152097	R480150480
160	R480143129	R480044478	R480156862	R480152784	R480044479	R480051377
200	R480041250	R480151194	R480045822	R480148986	R480068280	R480163053
250	R480162928	R480068778	R480152659	R480069183	R480163037	R480163054
320	R480162929	R480160211	R480042163	R480148534	R480148937	R480155887
400	R480069508	R480162989	R480153304	R480148988	R480157647	R480163055
500	R480048725	R480044634	R480070399	R480154536	R480158439	R480152777

Piston Ø Piston rod thread Ports Piston rod Ø	125 mm M27x2 G 1/2 32 mm
Stroke 25	R480148022
50	R480141034
80	R480143254
100	R480170767
125	R480170768
160	R480144243
200	R480167296
250	R480170769
320	R480170770
400	R480170771
500	R480170772

Technical data

Piston Ø	32 mm	40 mm	50 mm	63 mm	80 mm	100 mm	125 mm
Retracting piston force	435 N	660 N	1035 N	1765 N	2855 N	4635 N	7220 N
Extracting piston force	505 N	790 N	1235 N	1960 N	3165 N	4945 N	7725 N
Impact energy	0.4 J	0.65 J	1 J	1.6 J	2.5 J	3.9 J	6 J
Weight 0 mm stroke	0.5 kg	0.65 kg	1.06 kg	1.42 kg	2.37 kg	3.51 kg	6.72 kg
Weight +10 mm stroke	0.022 kg	0.032 kg	0.047 kg	0.054 kg	0.085 kg	0.1 kg	0.15 kg
Stroke max.	1600 mm	1900 mm	2100 mm	2500 mm	2800 mm	2800 mm	2750 mm

Technical information

The pressure dew point must be at least 15 °C under ambient and medium temperature and may not exceed 3 °C .
The oil content of compressed air must remain constant during the life cycle.
Use only the approved oils from AVENTICS. Further information can be found in the “Technical information” document (available in the MediaCentre).

Technical information

Material	
Cylinder tube	Aluminum, anodized
Piston rod	Stainless steel
Front cover	Die-cast aluminum
End cover	Die-cast aluminum
Seal	Polyurethane
Nut for piston rod	Steel, galvanized
Scraper	Polyurethane

Dimensions

Dimensions

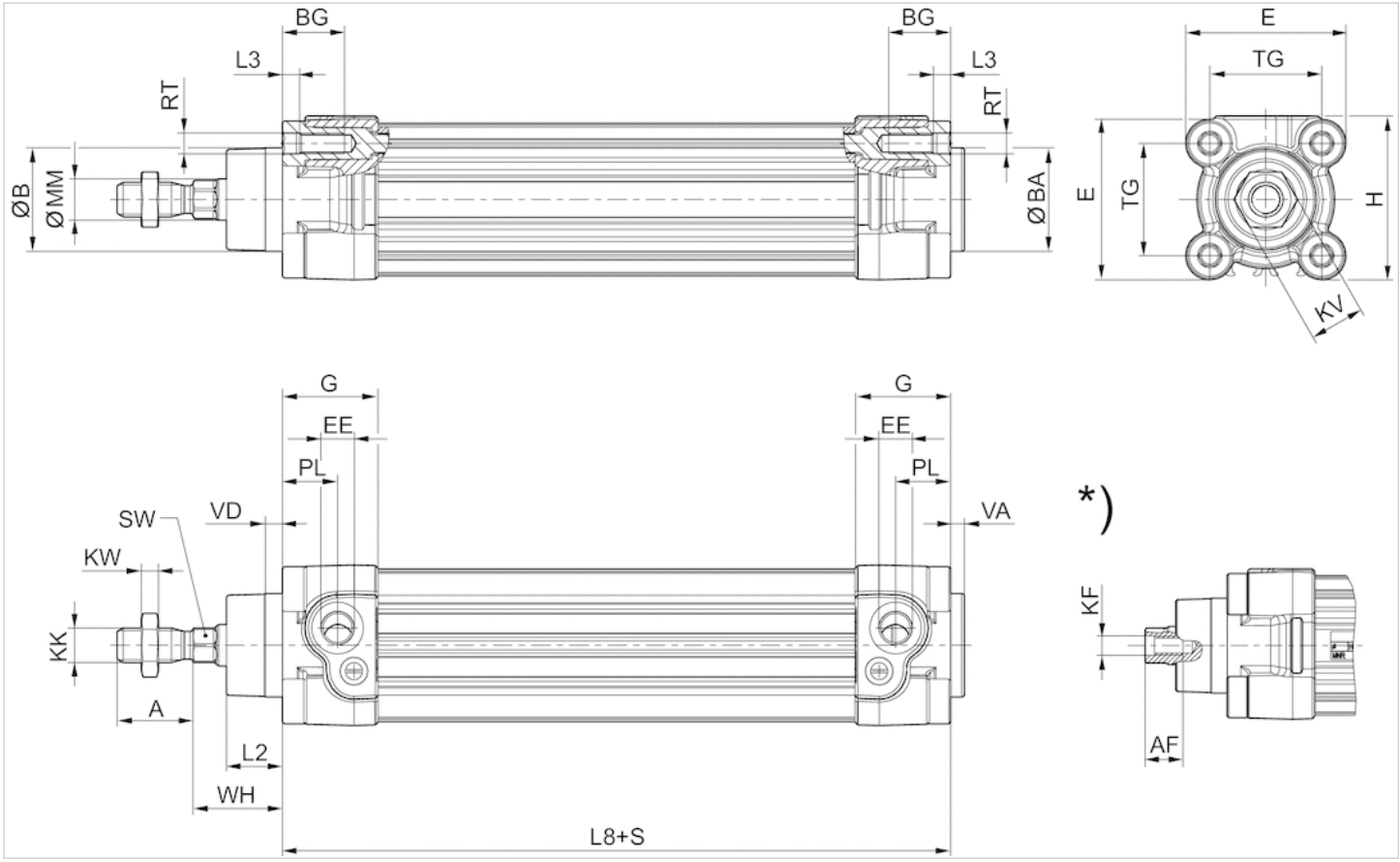

S = stroke
*) For cylinders with optional piston road with internal thread

Dimensions

Piston Ø	A -2	AF+1	ØB d11	ØBA d11	BG min.	E	EE	G	H	KF	KK	KV	KW
32 mm	22	12	30	30	16	46.5	G 1/8	27.75	47.5	M6	M10x1,25	16	5
40 mm	24	13.5	35	35	16	53	G 1/4	33.25	53	M8	M12x1,25	18	6
50 mm	32	17	40	40	16	65	G 1/4	31	65	M10	M16x1,5	24	8
63 mm	32	17	45	45	16	75	G 3/8	38.25	75	M10	M16x1,5	24	8
80 mm	40	21	45	45	17	95	G 3/8	38.25	95	M12	M20x1,5	30	10
100 mm	40	21	55	55	17	115	G 1/2	42.25	115	M12	M20x1,5	30	10
125 mm	54	28	60	60	20	140	G 1/2	53.85	140	M16	M27x2	41	13.5

Piston Ø	ØMM f8	PL	L2	L3 ±0,5	L8	RT	SW	TG	VA -1	VD	WH
32 mm	12	16	16.25	4.5	94±0,4	M6	10	32,5±0,5	4	5	26±1,4
40 mm	16	20	18.25	4.5	105±0,7	M6	13	38±0,5	4	5	30±1,4
50 mm	20	19	25	4.5	106±0,7	M8	17	46,5±0,6	4	5	37±1,4
63 mm	20	24	25	4.5	121±0,8	M8	17	56,5±0,7	4	5	37±1,8
80 mm	25	23.5	33	0	128±0,8	M10	22	72±0,7	4	5	46±1,8
100 mm	25	25	36	0	138±1	M10	22	89±0,7	4	5	51±1,8
125 mm	32	33	45	0	160±1	M12	27	110±1,1	6	7	65±2,2

Accessories overview

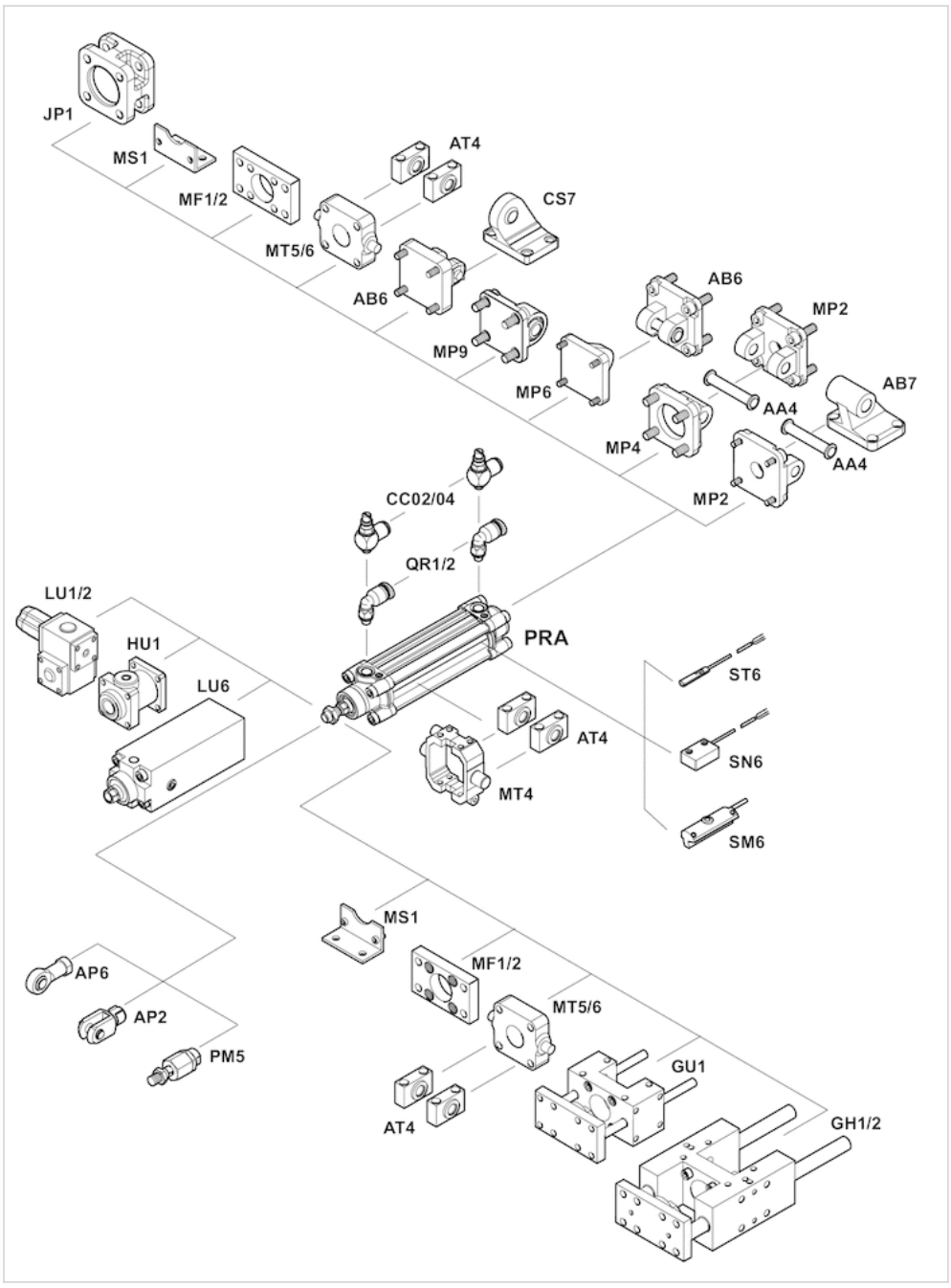

Profile cylinder ISO 15552, PRA series

- Ø 32-125 mm
- Ports G 1/8 G 1/4 G 3/8 G 1/2
- double-acting
- with magnetic piston
- Cushioning pneumatically adjustable
- Piston rod External thread
- Piston rod through
- ATEX optional

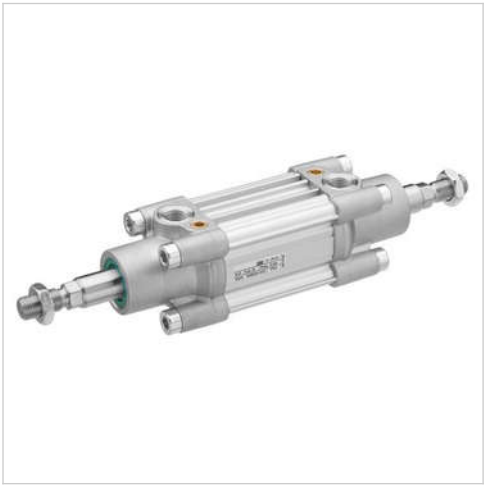

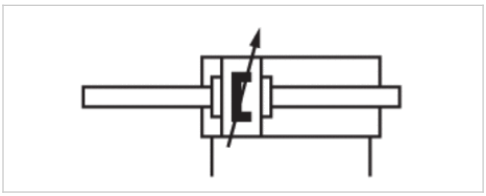

Standards	ISO 15552
Compressed air connection	Internal thread
Working pressure min./max.	1.5 ... 10 bar
Ambient temperature min./max.	-20 ... 80 °C
Medium temperature min./max.	-20 ... 80 °C
Medium	Compressed air
Max. particle size	50 µm
Oil content of compressed air	0 ... 5 mg/m³
Pressure for determining piston forces	6.3 bar

Technical data

Piston Ø Piston rod thread Ports Piston rod Ø	32 mm M10x1,25 G 1/8 12 mm	40 mm M12x1,25 G 1/4 16 mm	50 mm M16x1,5 G 1/4 20 mm	63 mm M16x1,5 G 3/8 20 mm	80 mm M20x1,5 G 3/8 25 mm	100 mm M20x1,5 G 1/2 25 mm
Stroke 25	R480041413	R480041432	R480041443	R480041453	R480041484	R480148059
50	R480041419	R480041433	R480041444	R480041454	R480041485	R480069994
80	R480041420	R480041434	R480041445	R480041455	R480041487	R480148061
100	R480041421	R480041435	R480041446	R480041456	R480041488	R480059815
125	R480041422	R480041436	R480041074	R480041457	R480041490	R480146278
160	R480041423	R480041437	R480041447	R480041458	R480041491	R480148062
200	R480041425	R480041438	R480041448	R480041459	R480041492	R480148063
250	R480041426	R480041439	R480041449	R480041460	R480041493	R480077546
320	R480041427	R480041440	R480041450	R480041461	R480041494	R480148064
400	R480041428	R480041441	R480041451	R480041481	-	R480148065
500	R480041429	R480041442	R480041452	R480041482	R480041497	R480148060

Piston Ø Piston rod thread Ports Piston rod Ø	125 mm M27x2 G 1/2 32 mm
Stroke 25	R480148066
50	R480148067
80	R480148068
100	R480142910
125	R480148069
160	R480148070
200	R480148071
250	R480148072
320	R480148073
400	R480148074
500	R480148075

Technical data

Piston Ø	32 mm	40 mm	50 mm	63 mm	80 mm	100 mm	125 mm
Retracting piston force	435 N	660 N	1035 N	1765 N	2855 N	4635 N	7220 N
Extracting piston force	435 N	660 N	1035 N	1765 N	2855 N	4635 N	7220 N
Cushioning length	16.5 mm	19 mm	17 mm	16.5 mm	19.5 mm	19.5 mm	22 mm
Cushioning energy	4.8 J	9 J	15 J	27 J	54 J	88 J	140 J
Weight 0 mm stroke	0.58 kg	0.8 kg	1.34 kg	1.72 kg	2.92 kg	4.08 kg	8.92 kg
Weight +10 mm stroke	0.031 kg	0.048 kg	0.072 kg	0.079 kg	0.124 kg	0.139 kg	0.22 kg
Stroke max.	1500 mm	1500 mm	1500 mm	1500 mm	1500 mm	1500 mm	1500 mm

Technical information

The pressure dew point must be at least 15 °C under ambient and medium temperature and may not exceed 3 °C .
The oil content of compressed air must remain constant during the life cycle.
Use only the approved oils from AVENTICS. Further information can be found in the “Technical information” document (available in the MediaCentre).

Technical information

Material	
Cylinder tube	Aluminum, anodized
Piston rod	Stainless steel
Front cover	Die-cast aluminum
End cover	Die-cast aluminum
Seal	Polyurethane
Nut for piston rod	Steel, galvanized
Scraper	Polyurethane

Dimensions

Dimensions

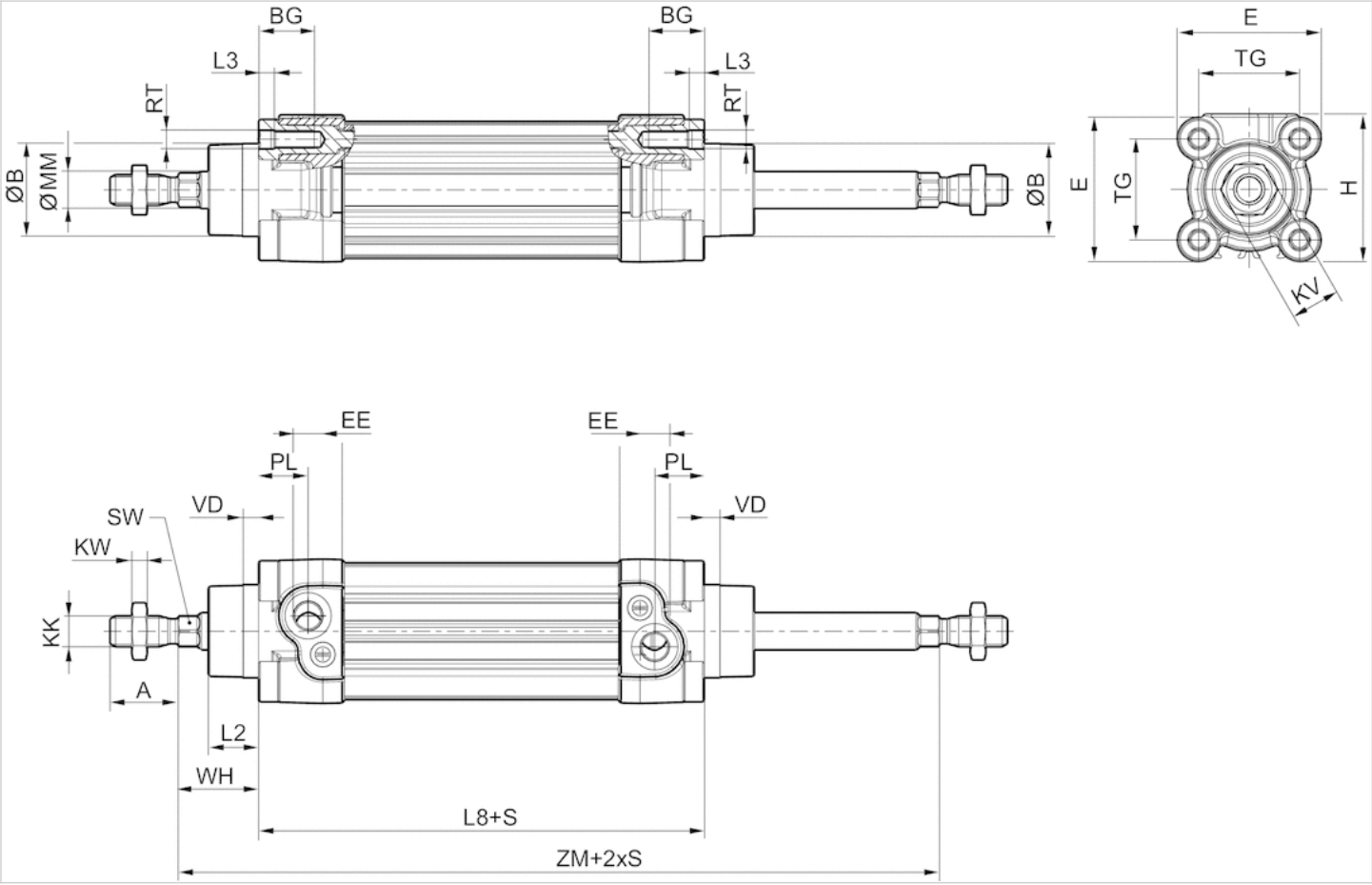

S = stroke

Dimensions

Piston Ø	A -2	ØB d11	BG min.	E	EE	G	H	KK	KV	KW	ØMM f8	PL	L2
32 mm	22	30	16	46.5	G 1/8	27.75	47.5	M10x1,25	16	5	12	16	16.25
40 mm	24	35	16	53	G 1/4	33.25	53	M12x1,25	18	6	16	20	18.25
50 mm	32	40	16	65	G 1/4	31	65	M16x1,5	24	8	20	19	25
63 mm	32	45	16	75	G 3/8	38.25	75	M16x1,5	24	8	20	24	25
80 mm	40	45	17	95	G 3/8	38.25	95	M20x1,5	30	10	25	23.5	33
100 mm	40	55	17	115	G 1/2	42.25	115	M20x1,5	30	10	25	25	36
125 mm	54	60	20	140	G 1/2	53.85	140	M27x2	41	13.5	32	33	45

Piston Ø	L3 ±0,5	L8	RT	SW	TG	VD	WH	ZM
32 mm	4.5	94±0,4	M6	10	32,5±0,5	5	26±1,4	146+3/-1,5
40 mm	4.5	105±0,7	M6	13	38±0,5	5	30±1,4	165+3/-1,5
50 mm	4.5	106±0,7	M8	17	46,5±0,6	5	37±1,4	180+3/-1,5
63 mm	4.5	121±0,8	M8	17	56,5±0,7	5	37±1,8	195+3/-1,5
80 mm	0	128±0,8	M10	22	72±0,7	5	46±1,8	220+3/-1,5
100 mm	0	138±1	M10	22	89±0,7	5	51±1,8	240+3,5/-2
125 mm	0	160±1	M12	27	110±1,1	7	65±2,2	290+3,5/-2

Diagrams

Cushioning diagram

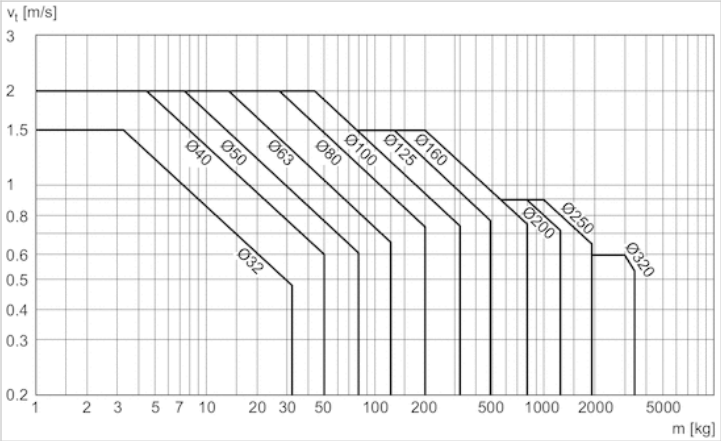

v = Piston velocity [m/s]
m = Cushionable mass [kg]

Accessories overview

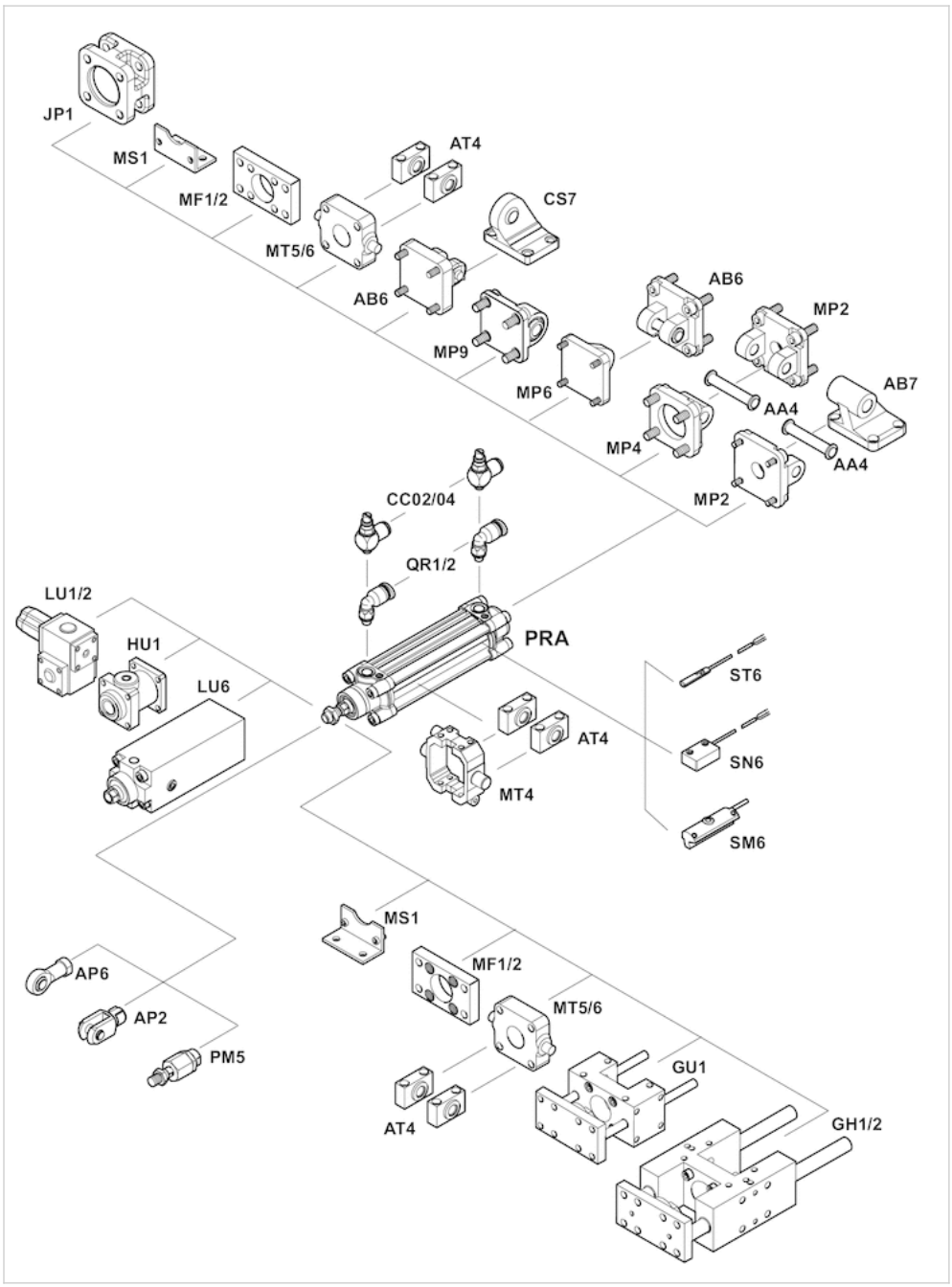

Profile cylinder ISO 15552, PRA series

- Ø 32-125 mm
- Ports G 1/8 G 1/4 G 3/8 G 1/2
- double-acting
- with magnetic piston
- Cushioning pneumatically adjustable
- Piston rod External thread
- Heat resistant



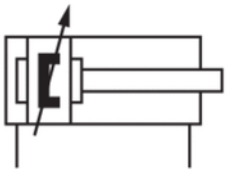

Standards	ISO 15552
Compressed air connection	Internal thread
Working pressure min./max.	2 ... 10 bar
Ambient temperature min./max.	-10 ... 120 °C
Medium temperature min./max.	-10 ... 120 °C
Medium	Compressed air
Max. particle size	50 µm
Oil content of compressed air	0 ... 5 mg/m³
Pressure for determining piston forces	6.3 bar

Technical data

Piston Ø Piston rod thread Ports Piston rod Ø	32 mm M10x1,25 G 1/8 12 mm	40 mm M12x1,25 G 1/4 16 mm	50 mm M16x1,5 G 1/4 20 mm	63 mm M16x1,5 G 3/8 20 mm	80 mm M20x1,5 G 3/8 25 mm	100 mm M20x1,5 G 1/2 25 mm
Stroke 25	R412014229	R412014243	R412014257	R412014278	R412014304	R412014327
50	R412014230	R412014168	R412014258	R412014225	R412014305	R412014328
80	R412014231	R412014170	R412014162	R412014279	R412014306	R412014329
100	R412014232	R412014244	R412014259	R412014280	R412014307	R412014330
125	R412014182	R412014216	R412014260	R412014281	R412014308	R412014331
160	R412014233	R412014245	R412014261	R412014282	R412014309	R412014332
200	R412014234	R412014246	R412014262	R412014283	R412014210	R412014333
250	R412014235	R412014247	R412014263	R412014214	R412014219	R412013911
320	R412014236	R412014248	R412014183	R412014284	R412014310	R412014334
400	R412014237	R412013926	R412014264	R412014285	R412014206	R412014335
500	R412014238	R412014249	R412014265	R412014286	R412014311	R412014336

Piston Ø Piston rod thread Ports Piston rod Ø	125 mm M27x2 G 1/2 32 mm
Stroke 25	R480605337
50	R480605338
80	R480605339
100	R480605340
125	R480605341
160	R480605342
200	R480605343
250	R480605146
320	R480605344
400	R480605345
500	R480605346

Technical data

Piston Ø	32 mm	40 mm	50 mm
Retracting piston force	435 N	660 N	1035 N
Extracting piston force	505 N	790 N	1235 N
Cushioning length	11.5 mm	15 mm	17 mm
Cushioning energy	4.8 J	9 J	15 J
Weight 0 mm stroke	0.5 kg	0.65 kg	1.06 kg
Weight +10 mm stroke	0.022 kg	0.032 kg	0.047 kg
Sealing material	Fluorocaoutchouc	Fluorocaoutchouc	Fluorocaoutchouc
Stroke max.	1600 mm	1900 mm	2100 mm

Piston Ø	63 mm	80 mm	100 mm	125 mm
Retracting piston force	1765 N	2855 N	4635 N	7220 N
Extracting piston force	1960 N	3165 N	4945 N	7725 N
Cushioning length	16.5 mm	19.5 mm	19.5 mm	22 mm
Cushioning energy	27 J	54 J	88 J	140 J
Weight 0 mm stroke	1.42 kg	2.37 kg	3.51 kg	6.72 kg
Weight +10 mm stroke	0.054 kg	0.085 kg	0.1 kg	0.15 kg
Sealing material	Fluorocaoutchouc	Fluorocaoutchouc	Fluorocaoutchouc	Polyurethane
Stroke max.	2500 mm	2800 mm	2800 mm	2750 mm

Technical information

The pressure dew point must be at least 15 °C under ambient and medium temperature and may not exceed 3 °C .
The oil content of compressed air must remain constant during the life cycle.
Use only the approved oils from AVENTICS. Further information can be found in the “Technical information” document (available in the MediaCentre).

Technical information

Material	
Cylinder tube	Aluminum, anodized
Piston rod	Stainless steel
Front cover	Die-cast aluminum
End cover	Die-cast aluminum
Seal	Fluorocaoutchouc Polyurethane
Nut for piston rod	Steel, galvanized
Scraper	Fluorocaoutchouc

Dimensions

Dimensions

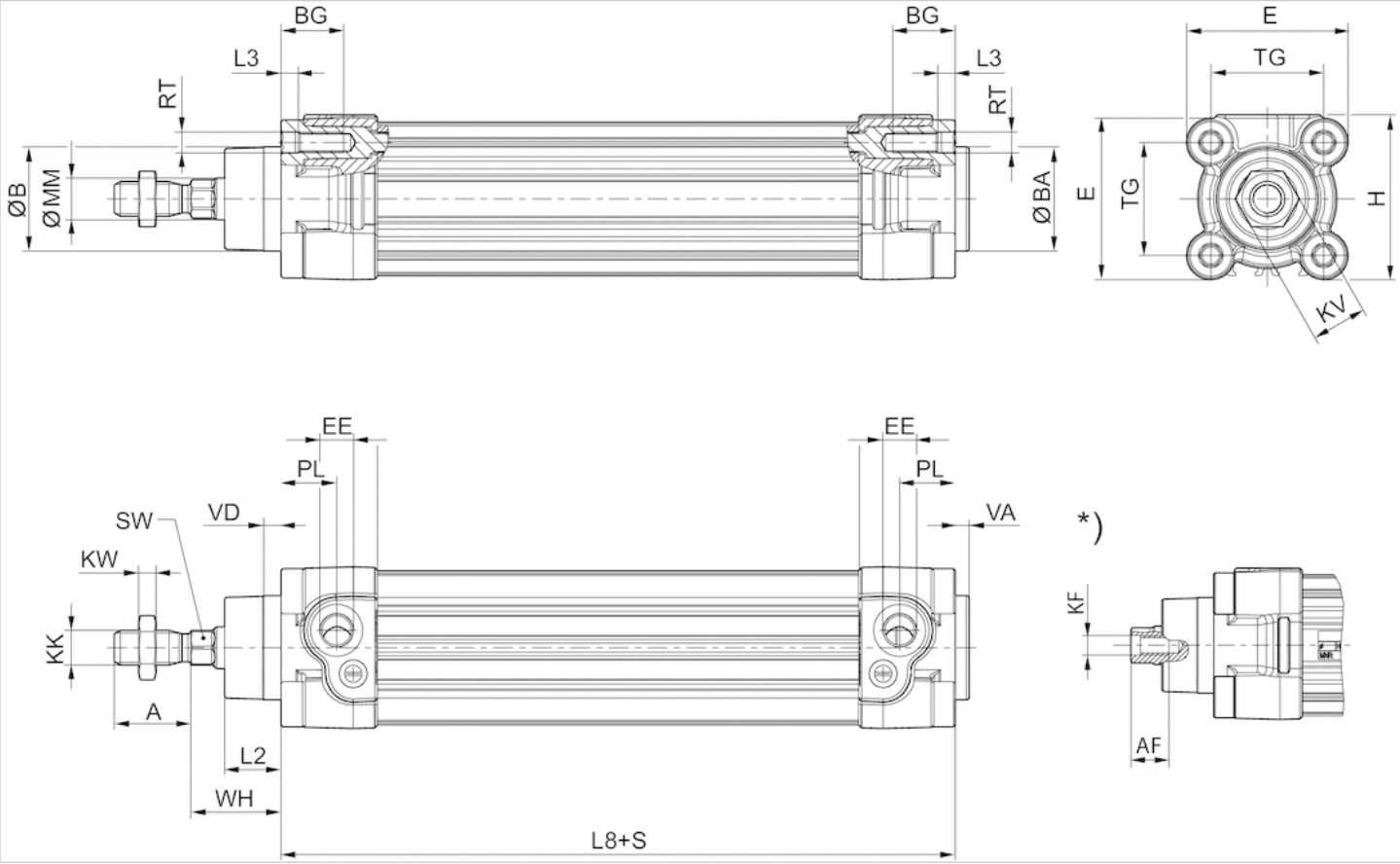

S = stroke
*) For cylinders with optional piston road with internal thread

Dimensions

Piston Ø	A -2	AF+1	ØB d11	ØBA d11	BG min.	E	EE	G	H	KF	KK	KV	KW
32 mm	22	12	30	30	16	46.5	G 1/8	27.75	47.5	M6	M10x1,25	16	5
40 mm	24	13.5	35	35	16	53	G 1/4	33.25	53	M8	M12x1,25	18	6
50 mm	32	17	40	40	16	65	G 1/4	31	65	M10	M16x1,5	24	8
63 mm	32	17	45	45	16	75	G 3/8	38.25	75	M10	M16x1,5	24	8
80 mm	40	21	45	45	17	95	G 3/8	38.25	95	M12	M20x1,5	30	10
100 mm	40	21	55	55	17	115	G 1/2	42.25	115	M12	M20x1,5	30	10
125 mm	54	28	60	60	20	140	G 1/2	53.85	140	M16	M27x2	41	13.5

Piston Ø	ØMM f8	PL	L2	L3 ±0,5	L8	RT	SW	TG	VA -1	VD	WH
32 mm	12	16	16.25	4.5	94±0,4	M6	10	32,5±0,5	4	5	26±1,4
40 mm	16	20	18.25	4.5	105±0,7	M6	13	38±0,5	4	5	30±1,4
50 mm	20	19	25	4.5	106±0,7	M8	17	46,5±0,6	4	5	37±1,4
63 mm	20	24	25	4.5	121±0,8	M8	17	56,5±0,7	4	5	37±1,8
80 mm	25	23.5	33	0	128±0,8	M10	22	72±0,7	4	5	46±1,8
100 mm	25	25	36	0	138±1	M10	22	89±0,7	4	5	51±1,8
125 mm	32	33	45	0	160±1	M12	27	110±1,1	6	7	65±2,2

Diagrams

Cushioning diagram

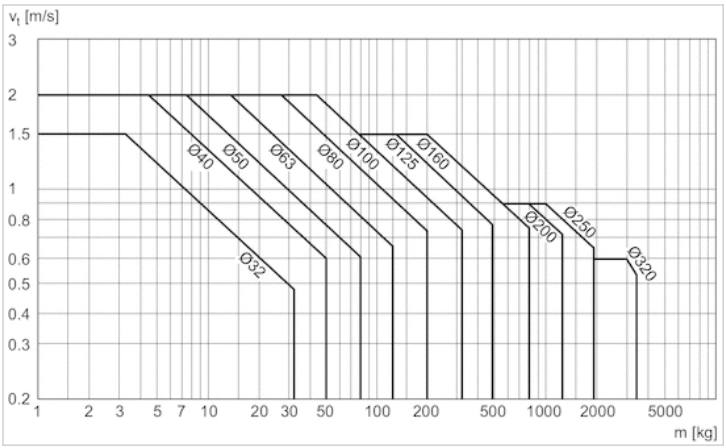

v = Piston velocity [m/s]
m = Cushionable mass [kg]

Accessories overview

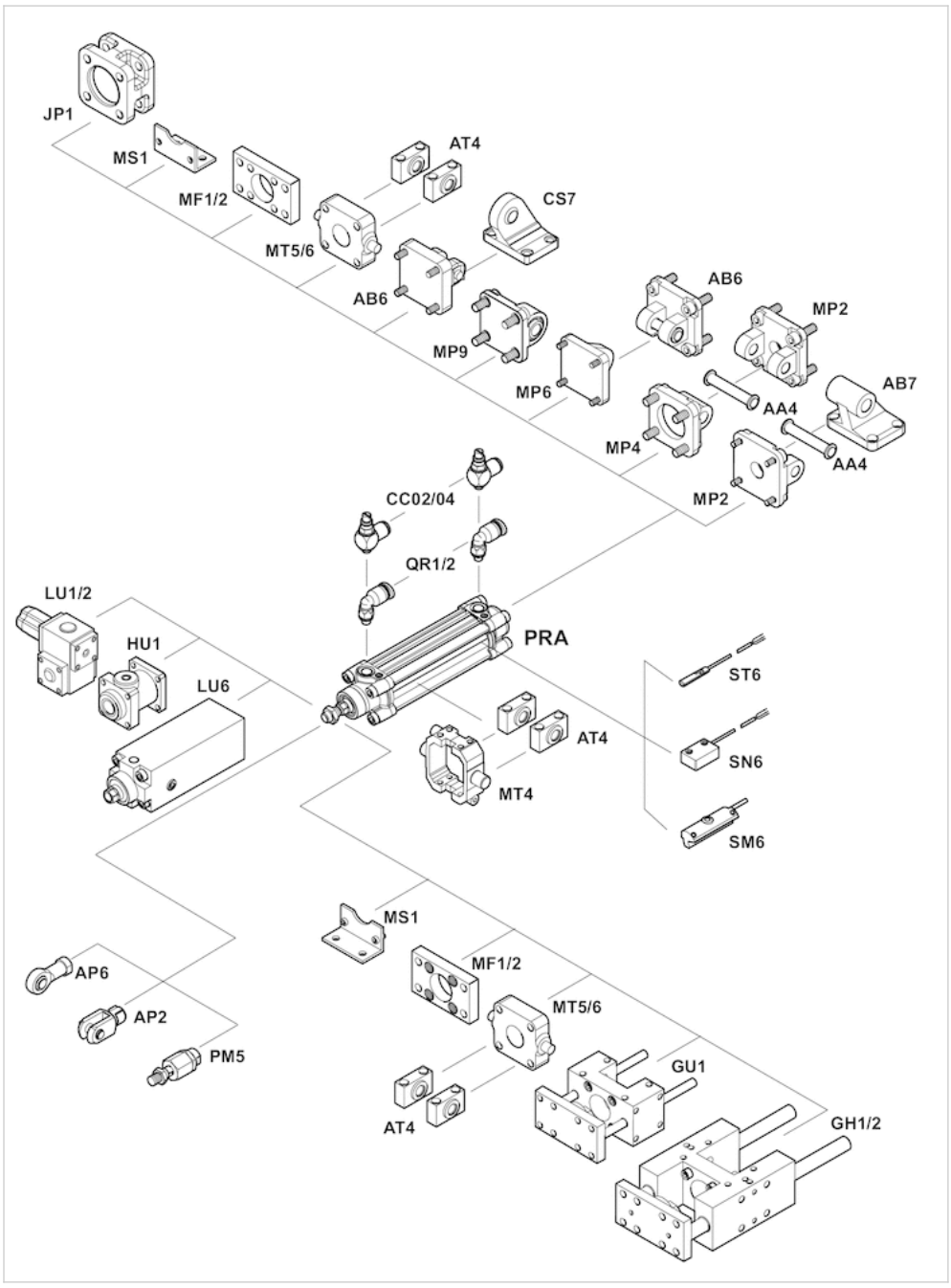

Profile cylinder ISO 15552, PRA series

- Ø 32-125 mm
- Ports G 1/8 G 1/4 G 3/8 G 1/2
- double-acting
- Cushioning pneumatically adjustable
- Piston rod External thread
- Heat resistant



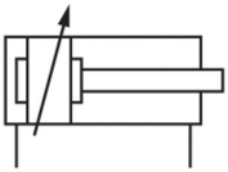

Standards	ISO 15552
Compressed air connection	Internal thread
Working pressure min./max.	2 ... 10 bar
Ambient temperature min./max.	-10 ... 150 °C
Medium temperature min./max.	-10 ... 150 °C
Medium	Compressed air
Max. particle size	50 µm
Oil content of compressed air	0 ... 5 mg/m³
Pressure for determining piston forces	6.3 bar

Technical data

Piston Ø Piston rod thread Ports Piston rod Ø	32 mm M10x1,25 G 1/8 12 mm	40 mm M12x1,25 G 1/4 16 mm	50 mm M16x1,5 G 1/4 20 mm	63 mm M16x1,5 G 3/8 20 mm	80 mm M20x1,5 G 3/8 25 mm	100 mm M20x1,5 G 1/2 25 mm
Stroke 25	R480144202	R480041108	R480147979	R480147990	R480144198	R480148011
50	R480147959	R480147968	R480147980	R480147991	R480148001	R480148012
80	R480040989	R480147969	R480147981	R480147992	R480148002	R480148013
100	R480147960	R480147970	R480147982	R480147993	R480147611	R480148014
125	R480147961	R480147971	R480147983	R480147994	R480148003	R480148015
160	R480147962	R480147972	R480147984	R480147995	R480148004	R480148016
200	R480147963	R480147973	R480147985	R480144714	R480147052	R480148017
250	R480147964	R480147974	R480147986	R480147996	R480148005	R480148018
320	R480147965	R480147975	R480147987	R480147997	R480146313	R480148019
400	R480147966	R480147976	R480147988	R480147998	R480042946	R480148020
500	R480147967	R480147977	R480147989	R480147999	R480148009	R480147194

Piston Ø Piston rod thread Ports Piston rod Ø	125 mm M27x2 G 1/2 32 mm
Stroke 25	R480170695
50	R480157264
80	R480163258
100	R480153677
125	R480155595
160	R480170774
200	R480165969
250	R480158304
320	R480170775
400	R480170776
500	R480149365

Technical data

Piston Ø	32 mm	40 mm	50 mm	63 mm	80 mm	100 mm	125 mm
Retracting piston force	435 N	660 N	1035 N	1765 N	2855 N	4635 N	7220 N
Extracting piston force	505 N	790 N	1235 N	1960 N	3165 N	4945 N	7725 N
Cushioning length	11.5 mm	15 mm	17 mm	16.5 mm	19.5 mm	19.5 mm	22 mm
Cushioning energy	4.8 J	9 J	15 J	27 J	54 J	88 J	140 J
Weight 0 mm stroke	0.5 kg	0.65 kg	1.06 kg	1.42 kg	2.37 kg	3.51 kg	6.72 kg
Weight +10 mm stroke	0.022 kg	0.032 kg	0.047 kg	0.054 kg	0.085 kg	0.1 kg	0.15 kg
Stroke max.	1600 mm	1900 mm	2100 mm	2500 mm	2800 mm	2800 mm	2750 mm

Technical information

The pressure dew point must be at least 15 °C under ambient and medium temperature and may not exceed 3 °C .
The oil content of compressed air must remain constant during the life cycle.
Use only the approved oils from AVENTICS. Further information can be found in the “Technical information” document (available in the MediaCentre).

Technical information

Material	
Cylinder tube	Aluminum, anodized
Piston rod	Stainless steel
Front cover	Die-cast aluminum
End cover	Die-cast aluminum
Seal	Fluorocaoutchouc
Nut for piston rod	Steel, galvanized
Scraper	Fluorocaoutchouc

Dimensions

Dimensions

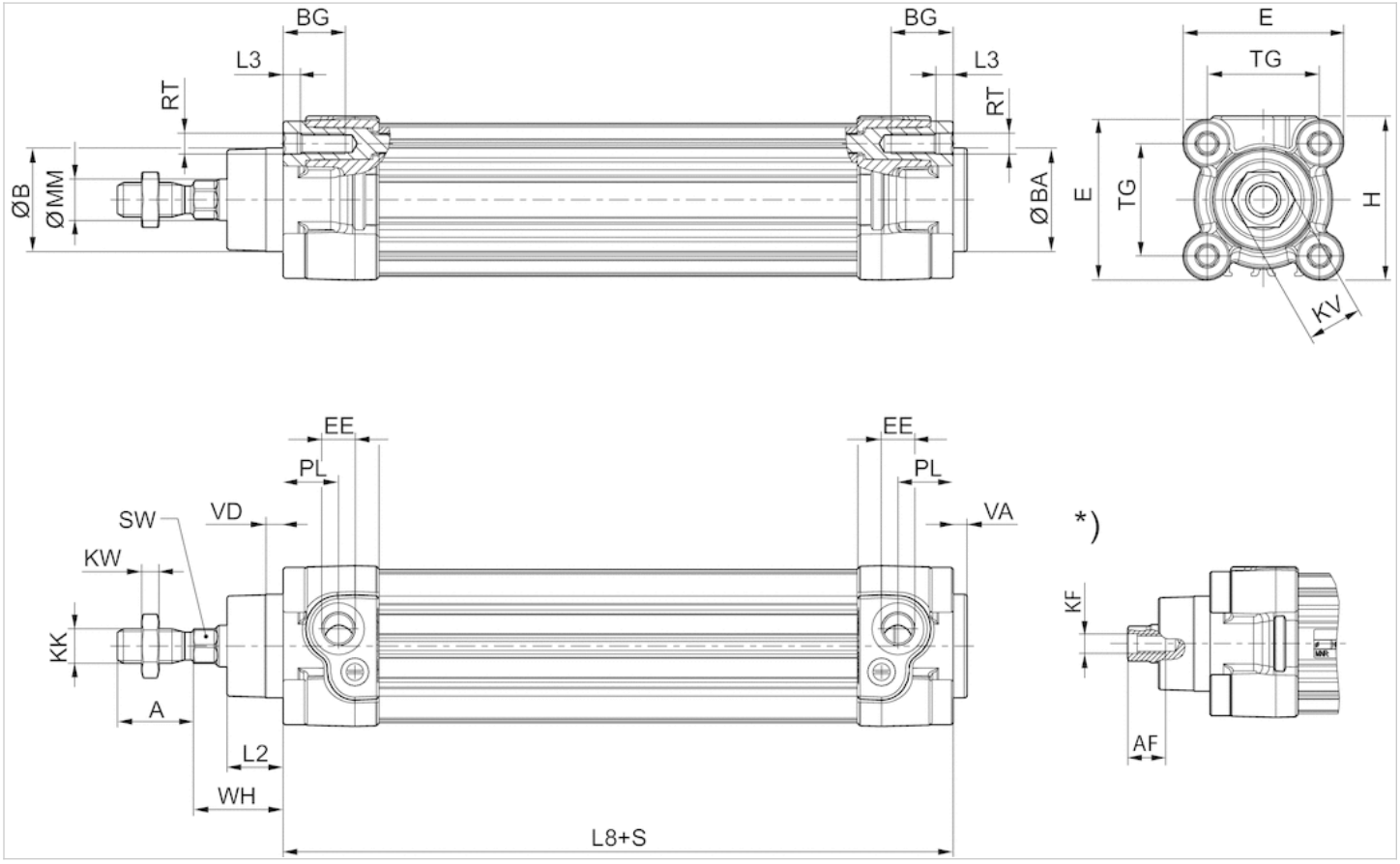

S = stroke

*) For cylinders with optional piston road with internal thread

Dimensions

Piston Ø	A -2	AF+1	ØB d11	ØBA d11	BG min.	E	EE	G	H	KF	KK	KV	KW
32 mm	22	12	30	30	16	46.5	G 1/8	27.75	47.5	M6	M10x1,25	16	5
40 mm	24	13.5	35	35	16	53	G 1/4	33.25	53	M8	M12x1,25	18	6
50 mm	32	17	40	40	16	65	G 1/4	31	65	M10	M16x1,5	24	8
63 mm	32	17	45	45	16	75	G 3/8	38.25	75	M10	M16x1,5	24	8
80 mm	40	21	45	45	17	95	G 3/8	38.25	95	M12	M20x1,5	30	10
100 mm	40	21	55	55	17	115	G 1/2	42.25	115	M12	M20x1,5	30	10
125 mm	54	28	60	60	20	140	G 1/2	53.85	140	M16	M27x2	41	13.5

Piston Ø	ØMM f8	PL	L2	L3 ±0,5	L8	RT	SW	TG	VA -1	VD	WH
32 mm	12	16	16.25	4.5	94±0,4	M6	10	32,5±0,5	4	5	26±1,4
40 mm	16	20	18.25	4.5	105±0,7	M6	13	38±0,5	4	5	30±1,4
50 mm	20	19	25	4.5	106±0,7	M8	17	46,5±0,6	4	5	37±1,4
63 mm	20	24	25	4.5	121±0,8	M8	17	56,5±0,7	4	5	37±1,8
80 mm	25	23.5	33	0	128±0,8	M10	22	72±0,7	4	5	46±1,8
100 mm	25	25	36	0	138±1	M10	22	89±0,7	4	5	51±1,8
125 mm	32	33	45	0	160±1	M12	27	110±1,1	6	7	65±2,2

Diagrams

Cushioning diagram

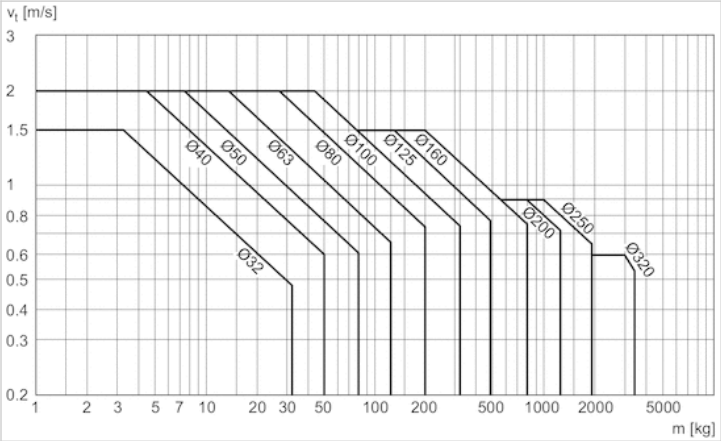

v = Piston velocity [m/s]
m = Cushionable mass [kg]

Accessories overview

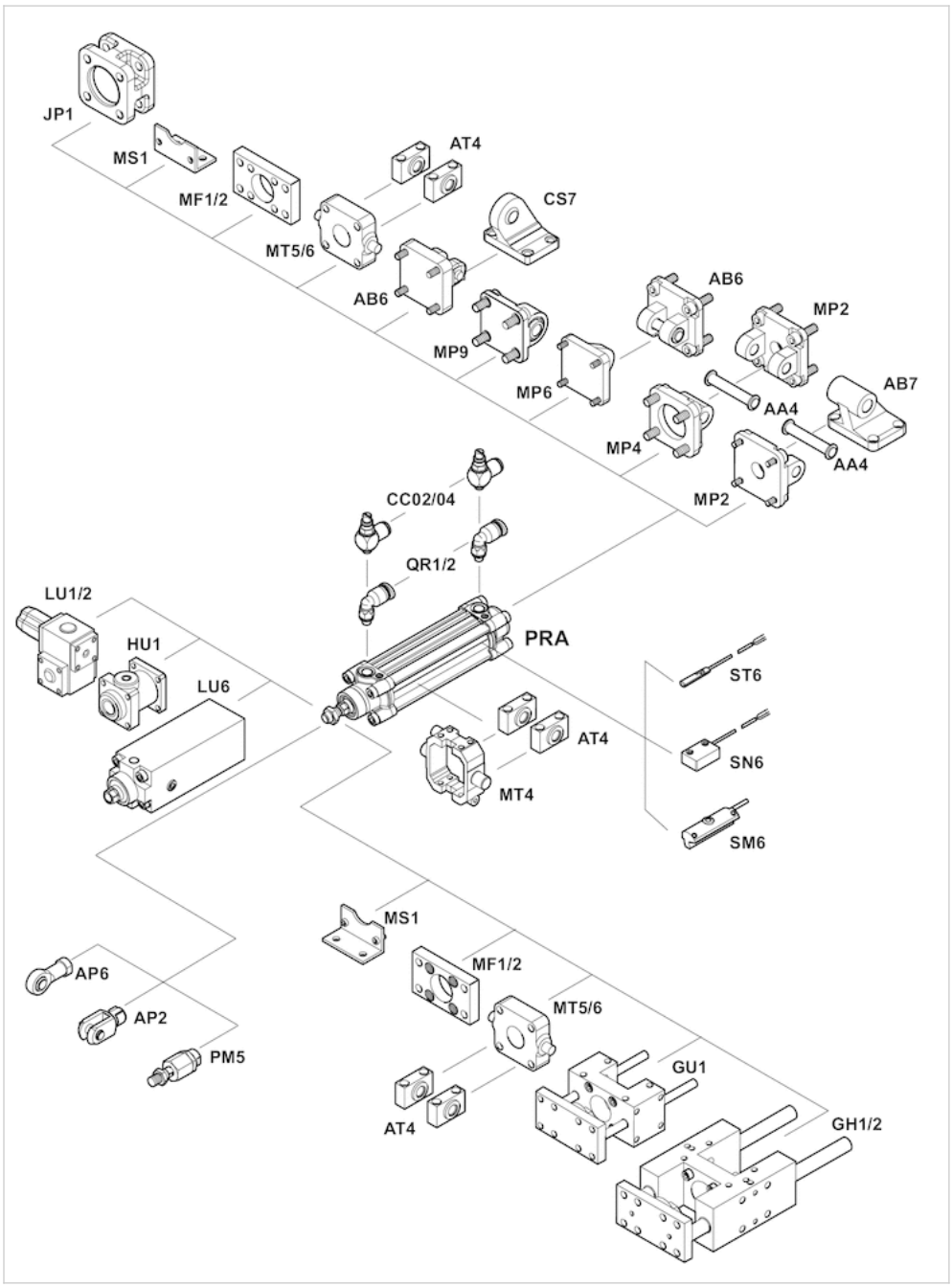

Profile cylinder ISO 15552, PRA series

- Ø 32-125 mm
- Ports G 1/8 G 1/4 G 3/8 G 1/2
- double-acting
- with magnetic piston
- Cushioning pneumatically adjustable
- Piston rod External thread
- -40 °C cold-resistant



Standards	ISO 15552
Compressed air connection	Internal thread
Working pressure min./max.	1.5 ... 10 bar
Ambient temperature min./max.	-40 ... 70 °C
Medium temperature min./max.	-40 ... 70 °C
Medium	Compressed air
Max. particle size	50 µm
Oil content of compressed air	0 ... 5 mg/m³
Pressure for determining piston forces	6.3 bar

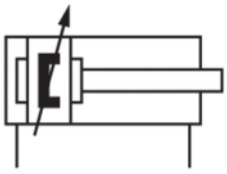

Technical data

Piston Ø Piston rod thread Ports Piston rod Ø	32 mm M10x1,25 G 1/8 12 mm	40 mm M12x1,25 G 1/4 16 mm	50 mm M16x1,5 G 1/4 20 mm	63 mm M16x1,5 G 3/8 20 mm	80 mm M20x1,5 G 3/8 25 mm	100 mm M20x1,5 G 3/8 25 mm
Stroke 25	R480691821	R480691832	R480691843	R480691854	R480691865	R480691876
50	R480691822	R480691833	R480691844	R480691855	R480691866	R480691877
80	R480691823	R480691834	R480691845	R480691856	R480691867	R480691878
100	R480691824	R480691835	R480691846	R480691857	R480691868	R480691879
125	R480691825	R480691836	R480691847	R480691858	R480691869	R480691880
160	R480691826	R480691837	R480691848	R480691859	R480691870	R480691881
200	R480691827	R480691838	R480691849	R480691860	R480691871	R480691882
250	R480691828	R480691839	R480691850	R480691861	R480691872	R480691883
320	R480691829	R480691840	R480691851	R480691862	R480691873	R480691884
400	R480691830	R480691841	R480691852	R480691863	R480691874	R480691885
500	R480691831	R480691842	R480691853	R480691864	R480691875	R480691886

Piston Ø Piston rod thread Ports Piston rod Ø	125 mm M27x2 G 1/2 32 mm
Stroke 25	R480691887
50	R480691888
80	R480691889
100	R480691890
125	R480691891
160	R480691892
200	R480691893
250	R480691894
320	R480691895
400	R480691896
500	R480691897

Technical data

Piston Ø	32 mm	40 mm	50 mm	63 mm	80 mm	100 mm	125 mm
Retracting piston force	435 N	660 N	1035 N	1765 N	2855 N	4635 N	7220 N
Extracting piston force	505 N	790 N	1235 N	1960 N	3165 N	4945 N	7725 N
Cushioning length	11.5 mm	15 mm	17 mm	16.5 mm	19.5 mm	19.5 mm	22 mm
Cushioning energy	4.8 J	9 J	15 J	27 J	54 J	88 J	140 J
Weight 0 mm stroke	0.5 kg	0.65 kg	1.06 kg	1.42 kg	2.37 kg	3.51 kg	6.72 kg
Weight +10 mm stroke	0.022 kg	0.032 kg	0.047 kg	0.054 kg	0.085 kg	0.1 kg	0.15 kg
Stroke max.	1600 mm	1900 mm	2100 mm	2500 mm	2800 mm	2800 mm	2750 mm

Technical information

The pressure dew point must be at least 15 °C under ambient and medium temperature and may not exceed 3 °C .
The oil content of compressed air must remain constant during the life cycle.
Use only the approved oils from AVENTICS. Further information can be found in the “Technical information” document (available in the MediaCentre).

Technical information

Material	
Cylinder tube	Aluminum, anodized
Piston rod	Stainless steel
Front cover	Die-cast aluminum
End cover	Die-cast aluminum
Seal	Polyurethane
Nut for piston rod	Steel, galvanized
Scraper	Brass

Dimensions

Dimensions

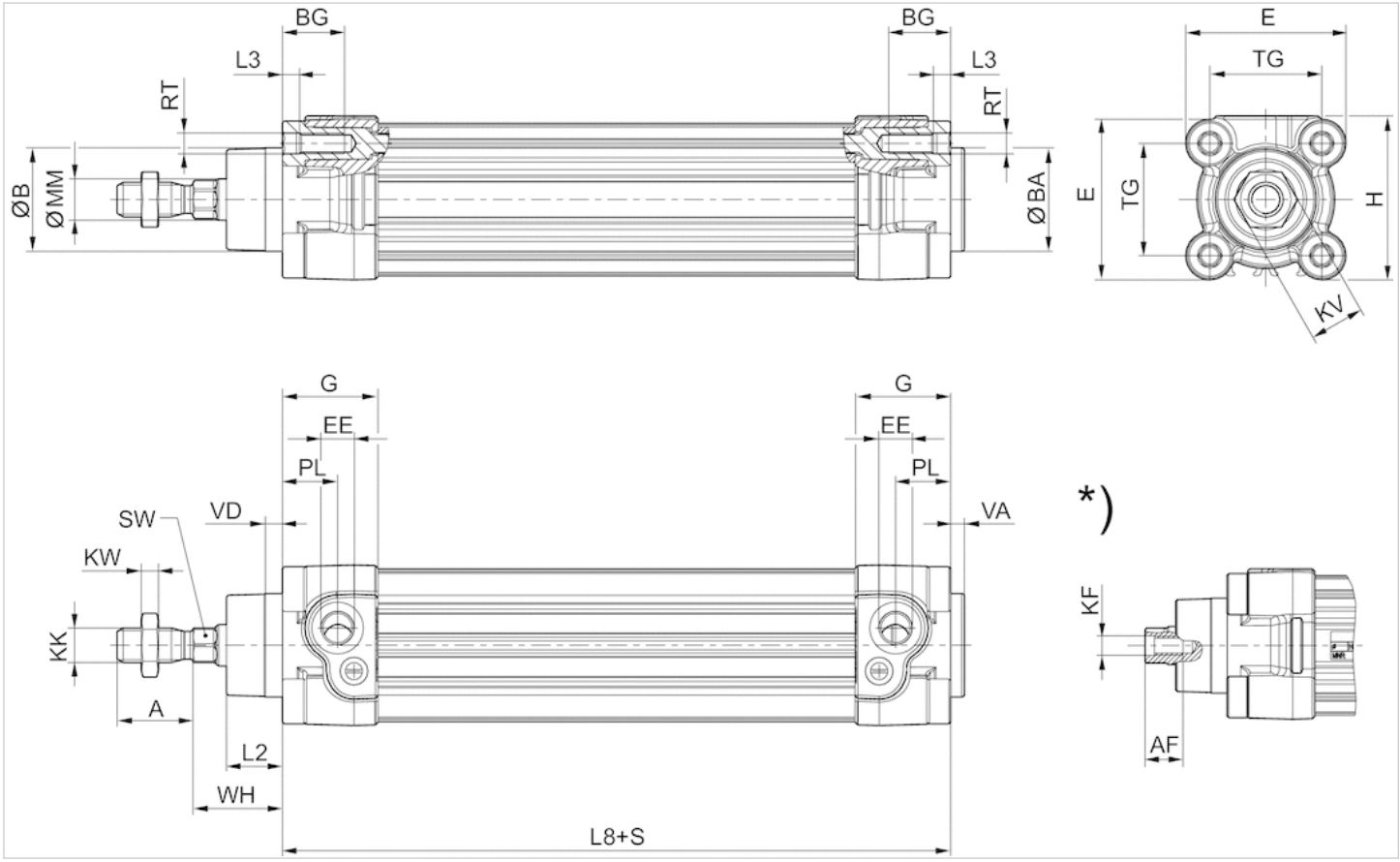

S = stroke
*) For cylinders with optional piston road with internal thread

Dimensions

Piston Ø	A -2	AF+1	ØB d11	ØBA d11	BG min.	E	EE	G	H	KF	KK	KV	KW
32 mm	22	12	30	30	16	46.5	G 1/8	27.75	47.5	M6	M10x1,25	16	5
40 mm	24	13.5	35	35	16	53	G 1/4	33.25	53	M8	M12x1,25	18	6
50 mm	32	17	40	40	16	65	G 1/4	31	65	M10	M16x1,5	24	8
63 mm	32	17	45	45	16	75	G 3/8	38.25	75	M10	M16x1,5	24	8
80 mm	40	21	45	45	17	95	G 3/8	38.25	95	M12	M20x1,5	30	10
100 mm	40	21	55	55	17	115	G 1/2	42.25	115	M12	M20x1,5	30	10
125 mm	54	28	60	60	20	140	G 1/2	53.85	140	M16	M27x2	41	13.5

Piston Ø	ØMM f8	PL	L2	L3 ±0,5	L8	RT	SW	TG	VA -1	VD	WH
32 mm	12	16	16.25	4.5	94±0,4	M6	10	32,5±0,5	4	5	26±1,4
40 mm	16	20	18.25	4.5	105±0,7	M6	13	38±0,5	4	5	30±1,4
50 mm	20	19	25	4.5	106±0,7	M8	17	46,5±0,6	4	5	37±1,4
63 mm	20	24	25	4.5	121±0,8	M8	17	56,5±0,7	4	5	37±1,8
80 mm	25	23.5	33	0	128±0,8	M10	22	72±0,7	4	5	46±1,8
100 mm	25	25	36	0	138±1	M10	22	89±0,7	4	5	51±1,8
125 mm	32	33	45	0	160±1	M12	27	110±1,1	6	7	65±2,2

Diagrams

Cushioning diagram

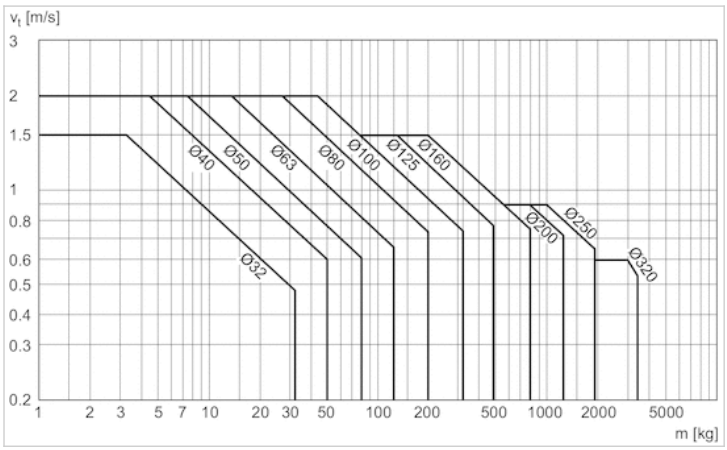

v = Piston velocity [m/s]
m = Cushionable mass [kg]

Accessories overview

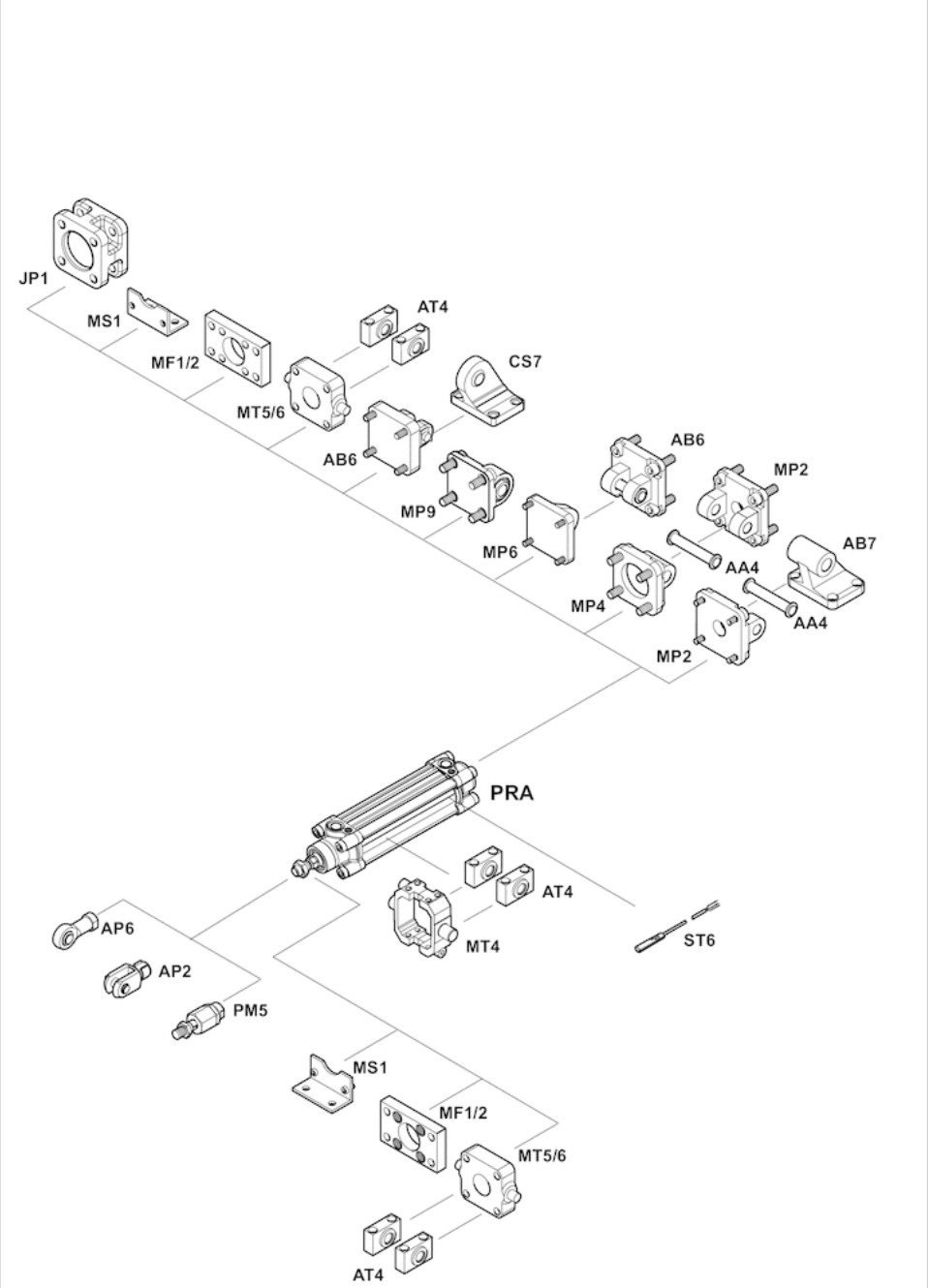

Profile cylinder ISO 15552, PRA series

- Ø 32-125 mm
- double-acting
- with magnetic piston
- Cushioning pneumatically adjustable
- Piston rod External thread
- Low friction



Standards	ISO 15552
Compressed air connection	Internal thread
Working pressure min./max.	1 ... 10 bar
Ambient temperature min./max.	-20 ... 80 °C
Medium temperature min./max.	-20 ... 80 °C
Medium	Compressed air
Max. particle size	50 µm
Oil content of compressed air	0 ... 5 mg/m³
Pressure for determining piston forces	6.3 bar

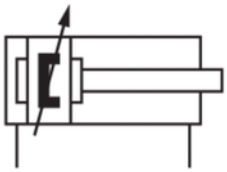

The extracting breakaway pressure is determined with the piston in center position.

Technical data

Piston Ø	32 mm	40 mm	50 mm	63 mm	80 mm	100 mm
Retracting piston force	435 N	660 N	1035 N	1765 N	2855 N	4635 N
Extracting piston force	505 N	790 N	1235 N	1960 N	3165 N	4945 N
Extracting breakaway pressure	0.09 bar	0.07 bar	0.05 bar	0.05 bar	0.04 bar	0.04 bar
Cushioning length	11.5 mm	15 mm	17 mm	16.5 mm	19.5 mm	19.5 mm
Cushioning energy	4.8 J	9 J	15 J	27 J	54 J	88 J
Weight 0 mm stroke	0.5 kg	0.65 kg	1.06 kg	1.42 kg	2.37 kg	3.51 kg
Weight +10 mm stroke	0.022 kg	0.032 kg	0.047 kg	0.054 kg	0.085 kg	0.1 kg
Stroke max.	1600 mm	1900 mm	2100 mm	2500 mm	2800 mm	2800 mm

Piston Ø	125 mm
Retracting piston force	7220 N
Extracting piston force	7725 N
Extracting breakaway pressure	0.06 bar
Cushioning length	22 mm
Cushioning energy	140 J
Weight 0 mm stroke	6.72 kg
Weight +10 mm stroke	0.15 kg
Stroke max.	2750 mm

Technical information

The pressure dew point must be at least 15 °C under ambient and medium temperature and may not exceed 3 °C .
The oil content of compressed air must remain constant during the life cycle.
Use only the approved oils from AVENTICS. Further information can be found in the “Technical information” document (available in the MediaCentre).

Technical information

Material	
Cylinder tube	Aluminum, anodized
Piston rod	Stainless steel
Front cover	Die-cast aluminum
End cover	Die-cast aluminum
Seal	Nitrile butadiene rubber
Nut for piston rod	Steel, galvanized
Scraper	Nitrile butadiene rubber

Dimensions

Dimensions

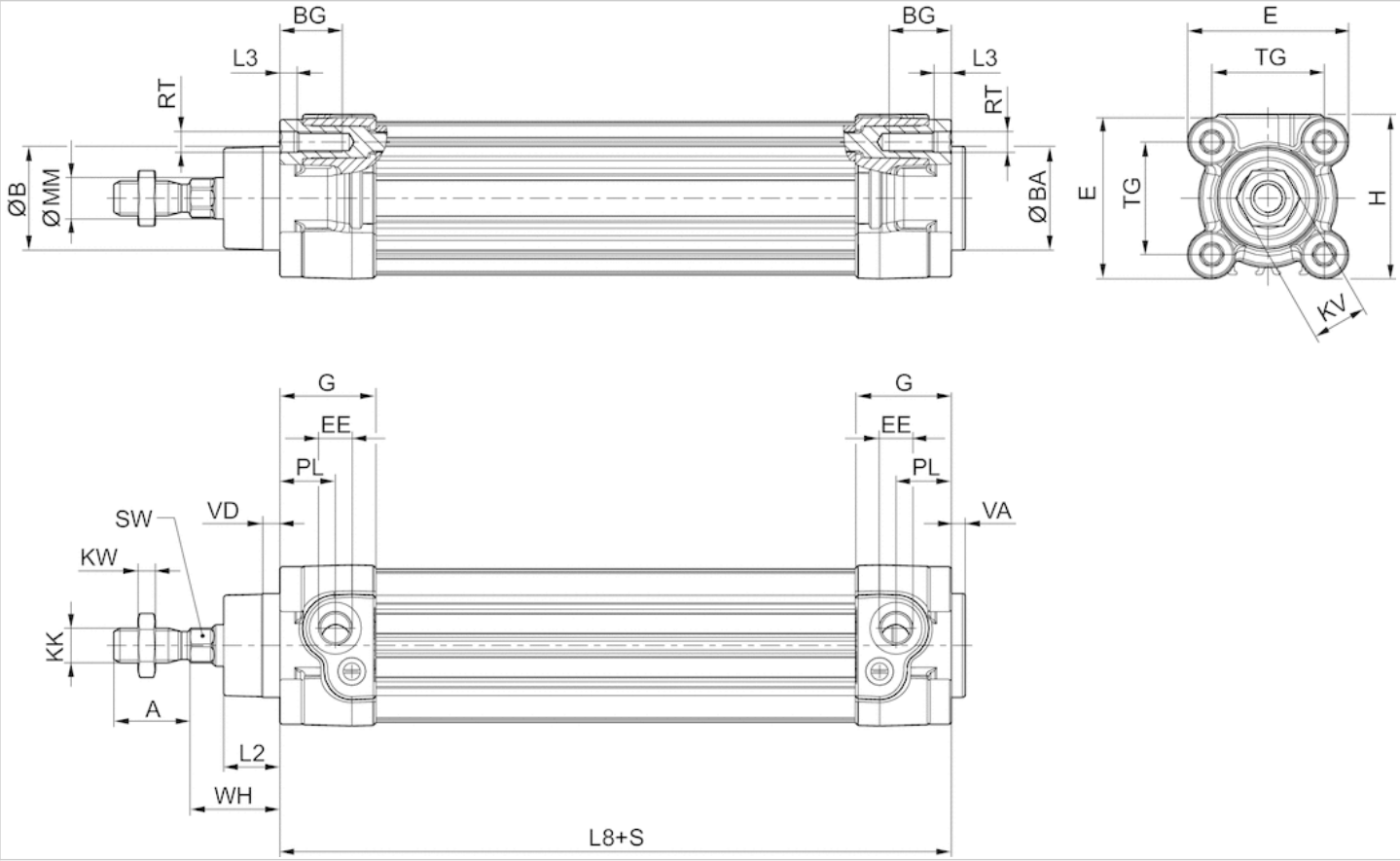

S = stroke

Dimensions

Ø	A -2	ØB d11	ØBA d11	BG min.	E	EE	G	H	KK	KV	KW
32	22	30	30	16	46.5	G 1/8	27.75	47.5	M10x1,25	16	5
40	24	35	35	16	53	G 1/4	33.25	53	M12x1,25	18	6
50	32	40	40	16	65	G 1/4	31	65	M16x1,5	24	8
63	32	45	45	16	75	G 3/8	38.25	75	M16x1,5	24	8
80	40	45	45	17	95	G 3/8	38.25	95	M20x1,5	30	10
100	40	55	55	17	115	G 1/2	42.25	115	M20x1,5	30	10
125	54	60	60	20	140	G 1/2	53.85	140	M27x2	41	13.5

ØMM f8	PL	L2	L3 ±0,5	L8	RT	SW	TG	VA -1	VD	WH
12	16	16.25	4.5	94±0,4	M6	10	32,5±0,5	4	5	26±1,4
16	20	18.25	4.5	105±0,7	M6	13	38±0,5	4	5	30±1,4
20	19	25	4.5	106±0,7	M8	17	46,5±0,6	4	5	37±1,4
20	24	25	4.5	121±0,8	M8	17	56,5±0,7	4	5	37±1,8
25	23.5	33	0	128±0,8	M10	22	72±0,7	4	5	46±1,8
25	25	36	0	138±1	M10	22	89±0,7	4	5	51±1,8
32	33	45	0	160±1	M12	27	110±1,1	6	7	65±2,2

Diagrams

Cushioning diagram

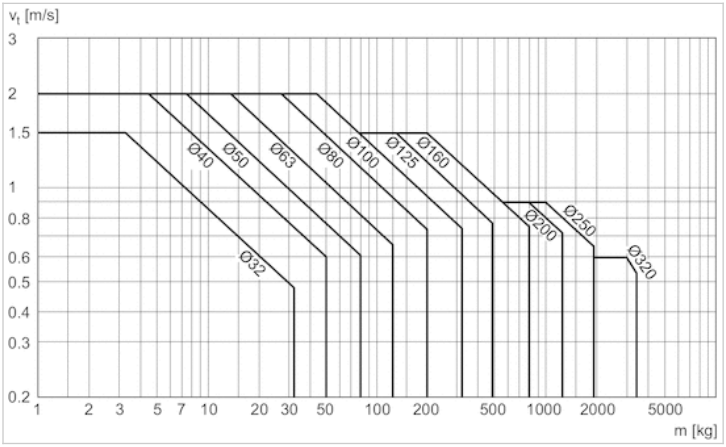

v = Piston velocity [m/s]
m = Cushionable mass [kg]

Stick-slip effect in unpressurized state

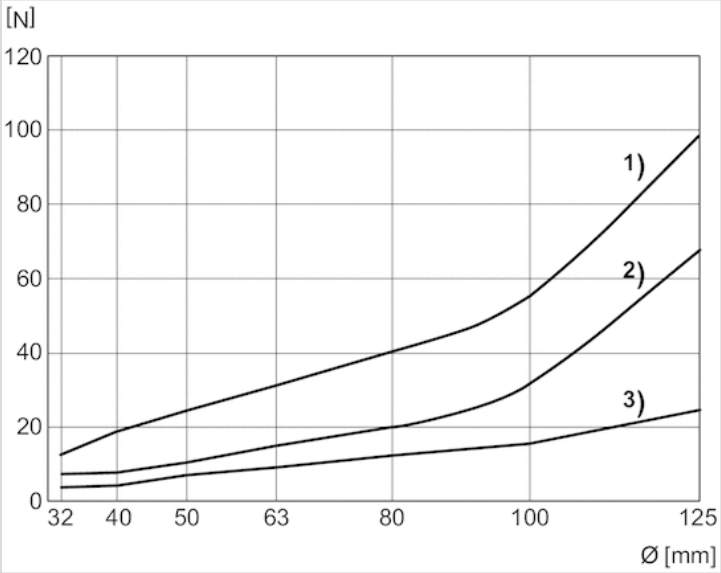

1) Standard PRA
2) Low-friction PRA (with magnet)
3) Low-friction TRB (without magnet)

Stick-slip effect, internal cylinder pressure on both sides 6.3 bar

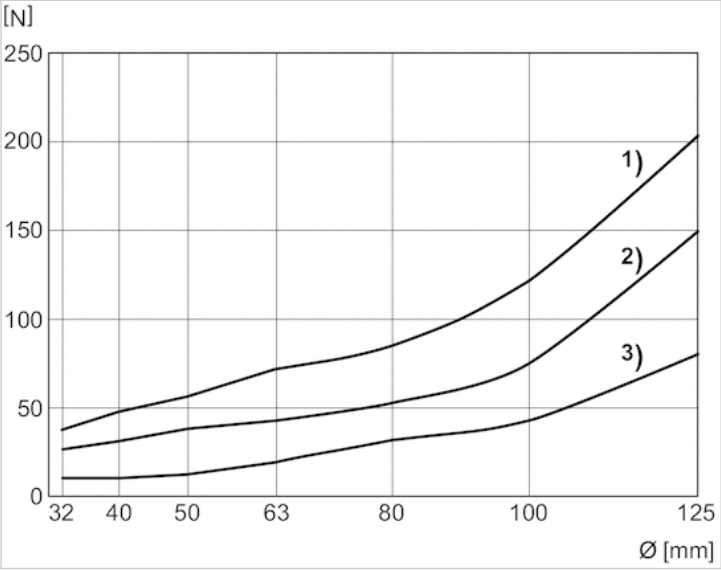

1) Standard PRA
2) Low-friction PRA (with magnet)
3) Low-friction TRB (without magnet)

Accessories overview

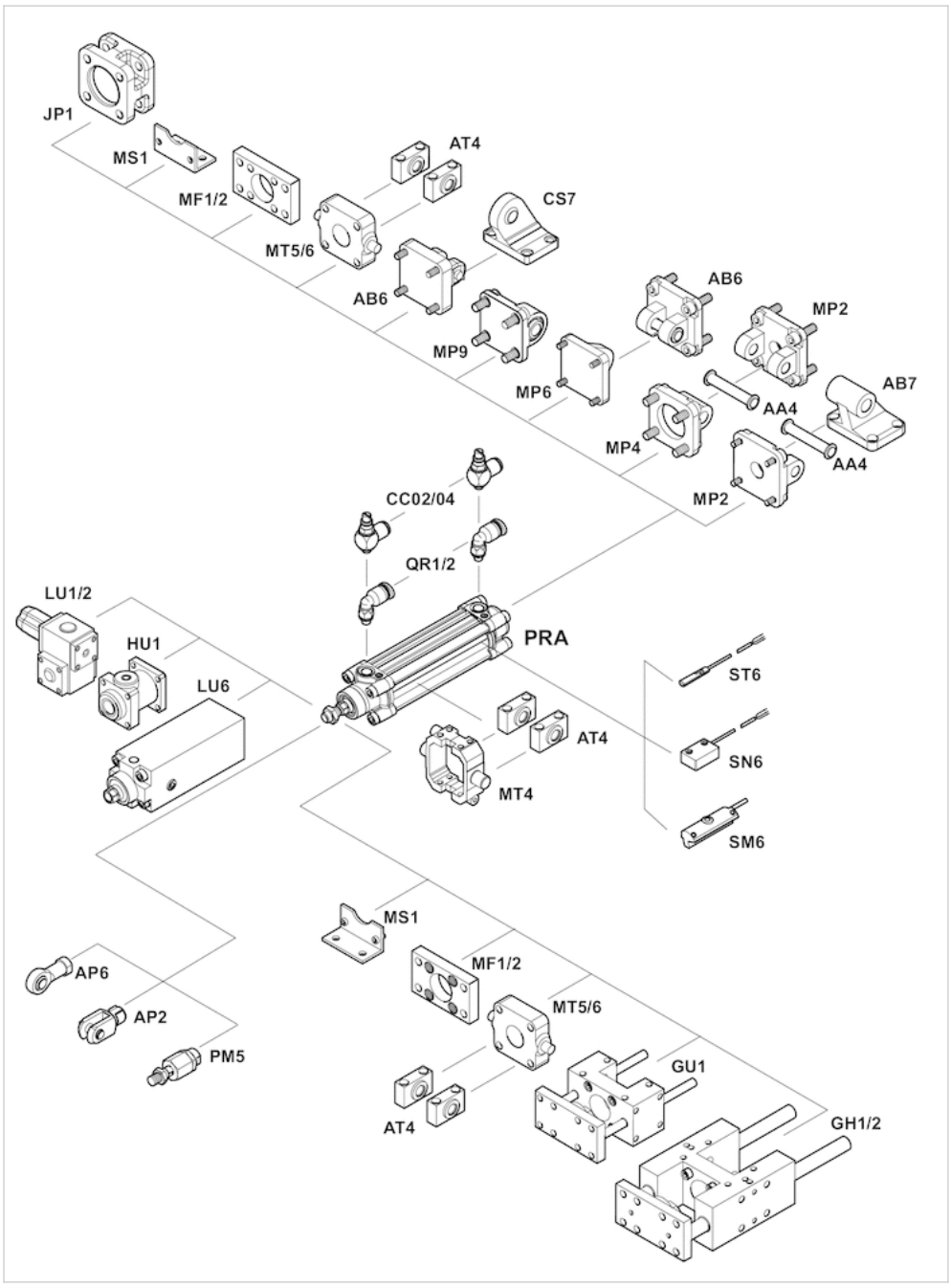

Profile cylinder ISO 15552, Series PRA-MS

- Modular sealing system



Standards

ISO 15552

For additional technical data please see the relevant data sheets for the standard version.

Technical information

The pressure dew point must be at least 15 °C under ambient and medium temperature and may not exceed 3 °C .
The oil content of compressed air must remain constant during the life cycle.
Use only the approved oils from AVENTICS. Further information can be found in the “Technical information” document (available in the MediaCentre).

Dimensions

Dimensions in mm

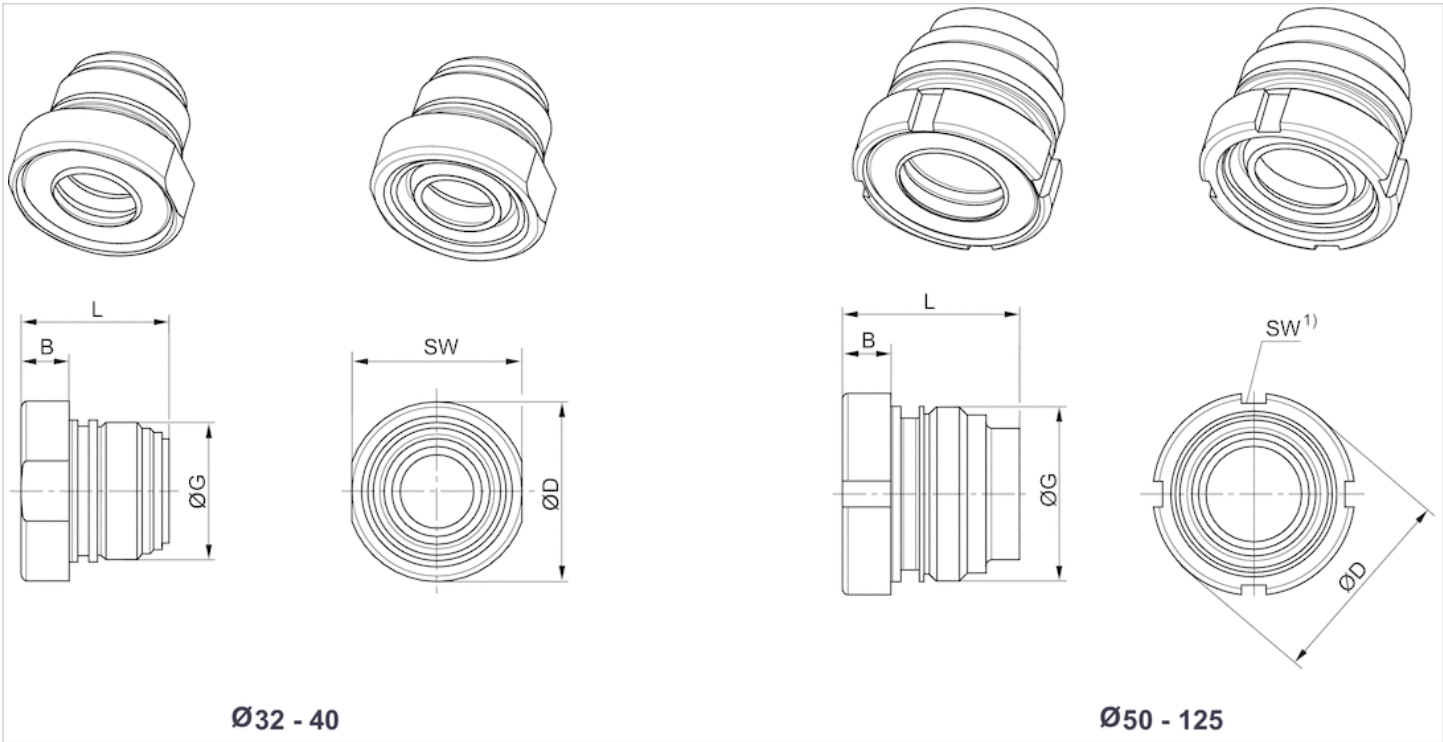

1) Can be mounted with hook wrench in accordance with DIN 1810 A

Dimensions

Piston Ø	32
Seal	Acrylonitrile butadiene rubber
Scraper	Polyester elastomer
Ambient temperature min./max.	-20 °C ... + 80 °C

Acrylonitrile butadiene rubber	Fluorocaoutchouc
Polytetrafluorethylene	Polytetrafluorethylene
-20 °C ... + 80 °C	-10 °C ... + 120 °C

40-125	
Acrylonitrile butadiene rubber	Acrylonitrile butadiene rubber
Polyester elastomer	Polytetrafluorethylene
-20 °C ... + 80 °C	-20 °C ... + 80 °C

Fluorocaoutchouc	Acrylonitrile butadiene rubber	Fluorocaoutchouc
Polytetrafluorethylene	Brass	Brass
-10 °C ... + 120 °C	-20 °C ... + 80 °C	-10 °C ... + 120 °C

Dimensions

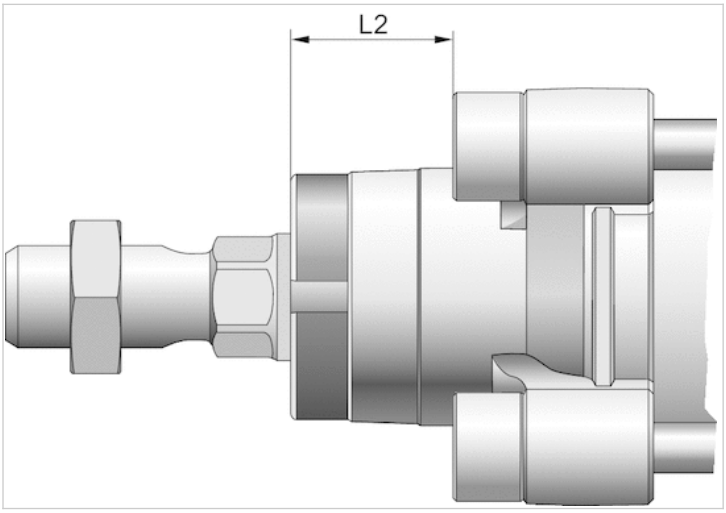

Dimensions

Ø	B	ØD	G	L	L2	SW
32	6.7	24.5	M22x1	23	16.25	23
40	9.2	34	M26x1,5	28.1	18.25	32
50, 63	9	38.5	M33x2	33.5	25	40-42
80, 100	10	44	M40x2	44	33	45-50
125	12	57	M50x2	56	45	58-62

Accessories overview

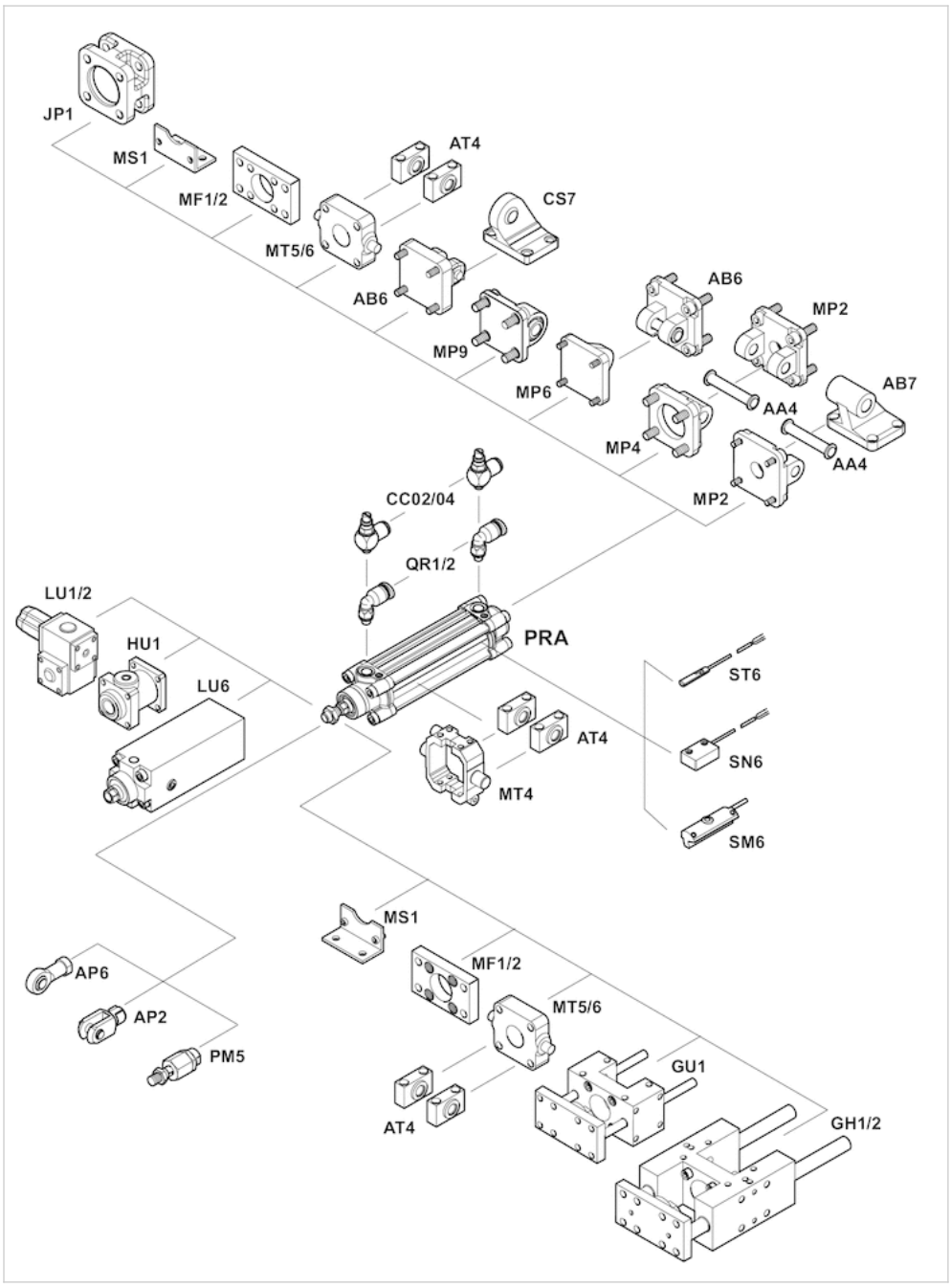

Profile cylinder ISO 15552, PRA series

- Ø 32-125 mm
- Ports G 1/8 G 1/4 G 3/8 G 1/2
- double-acting
- with magnetic piston
- Cushioning pneumatically adjustable
- corrosion-resistant
- Piston rod External thread



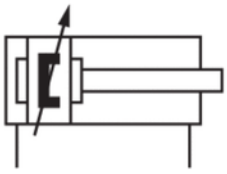

Standards	ISO 15552
Compressed air connection	Internal thread
Working pressure min./max.	1.5 ... 10 bar
Ambient temperature min./max.	-20 ... 80 °C
Medium temperature min./max.	-20 ... 80 °C
Medium	Compressed air
Max. particle size	50 µm
Oil content of compressed air	0 ... 5 mg/m³
Pressure for determining piston forces	6.3 bar

Technical data

Piston Ø Piston rod thread Ports Piston rod Ø	32 mm M10x1,25 G 1/8 12 mm	40 mm M12x1,25 G 1/4 16 mm	50 mm M16x1,5 G 1/4 20 mm	63 mm M16x1,5 G 3/8 20 mm	80 mm M20x1,5 G 1/8 25 mm	100 mm M20x1,5 G 1/2 25 mm
Stroke 25	R480691975	R480691986	R480691997	R480692008	R480692019	R480692030
50	R480691976	R480691987	R480691998	R480692009	R480692020	R480692031
80	R480691977	R480691988	R480691999	R480692010	R480692021	R480692032
100	R480691978	R480691989	R480692000	R480692011	R480692022	R480692033
125	R480691979	R480691990	R480692001	R480692012	R480692023	R480692034
160	R480691980	R480691991	R480692002	R480692013	R480692024	R480692035
200	R480691981	R480691992	R480692003	R480692014	R480692025	R480692036
250	R480691982	R480691993	R480692004	R480692015	R480692026	R480692037
320	R480691983	R480691994	R480692005	R480692016	R480692027	R480692038
400	R480691984	R480691995	R480692006	R480692017	R480692028	R480692039
500	R480691985	R480691996	R480692007	R480692018	R480692029	R480692040

Piston Ø Piston rod thread Ports Piston rod Ø	125 mm M27x2 G 1/2 32 mm
Stroke 25	R480692041
50	R480692042
80	R480692043
100	R480692044
125	R480692045
160	R480692046
200	R480692047
250	R480692048
320	R480692049
400	R480692050
500	R480692051

Technical data

Piston Ø	32 mm	40 mm	50 mm	63 mm	80 mm	100 mm	125 mm
Retracting piston force	435 N	660 N	1035 N	1765 N	2855 N	4635 N	7220 N
Extracting piston force	505 N	790 N	1235 N	1960 N	3165 N	4945 N	7725 N
Cushioning length	16.5 mm	19 mm	17 mm	16.5 mm	19.5 mm	19.5 mm	22 mm
Cushioning energy	4.8 J	9 J	15 J	27 J	54 J	88 J	140 J
Weight 0 mm stroke	0.5 kg	0.65 kg	1.06 kg	1.42 kg	2.37 kg	3.51 kg	6.72 kg
Weight +10 mm stroke	0.022 kg	0.032 kg	0.047 kg	0.054 kg	0.085 kg	0.1 kg	0.15 kg
Stroke max.	1600 mm	1900 mm	2100 mm	2500 mm	2800 mm	2800 mm	2750 mm

Technical information

The pressure dew point must be at least 15 °C under ambient and medium temperature and may not exceed 3 °C .
The oil content of compressed air must remain constant during the life cycle.
Use only the approved oils from AVENTICS. Further information can be found in the “Technical information” document (available in the MediaCentre).

Technical information

Material	
Cylinder tube	Aluminum, anodized
Piston rod	Stainless steel
Front cover	Die-cast aluminum, anodized
End cover	Die-cast aluminum, anodized
Seal	Polyurethane
Nut for piston rod	Stainless steel
Scraper	Polyurethane

Dimensions

Dimensions

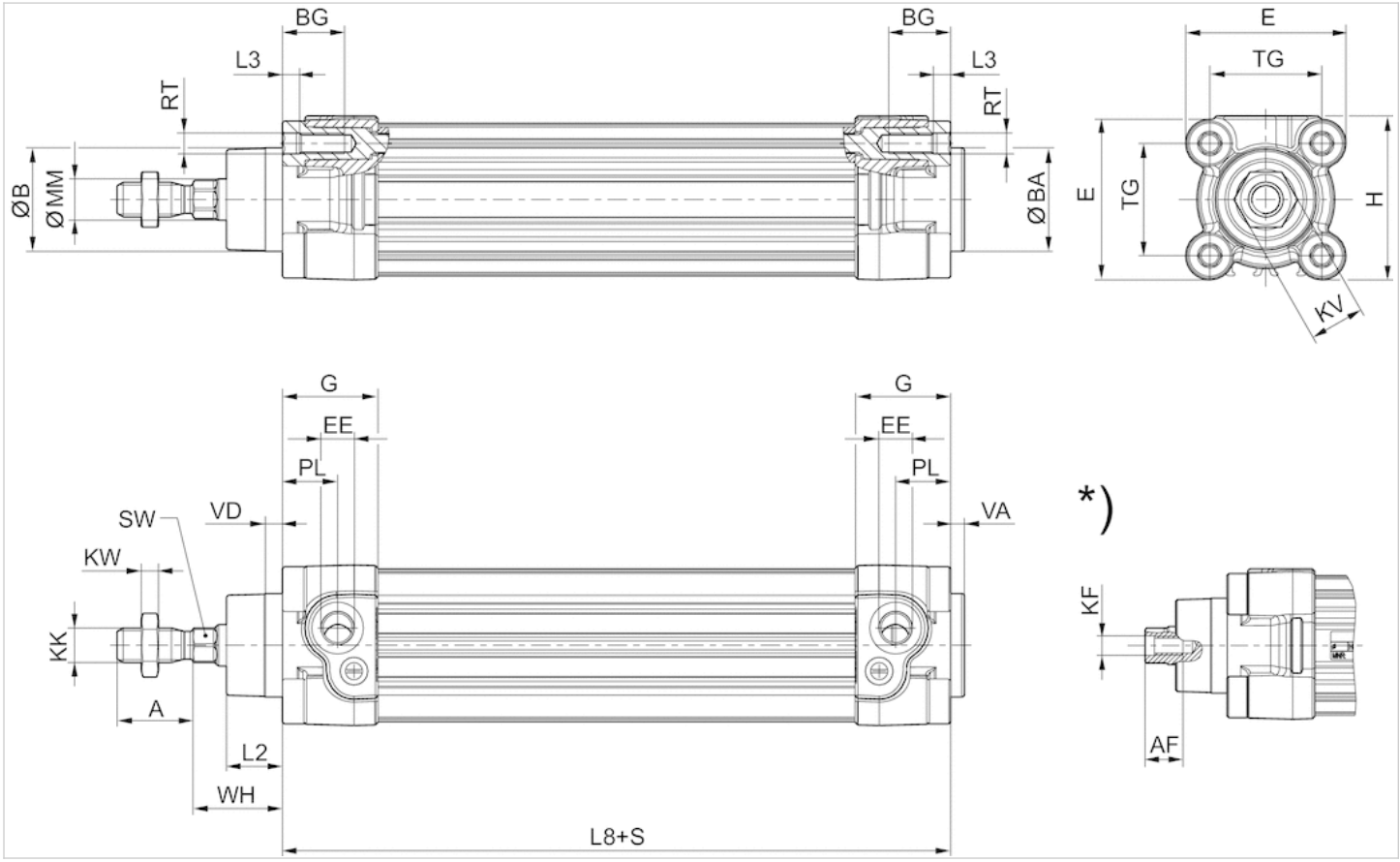

S = stroke
*) For cylinders with optional piston road with internal thread

Dimensions

Piston Ø	A -2	AF+1	ØB d11	ØBA d11	BG min.	E	EE	G	H	KF	KK	KV	KW
32 mm	22	12	30	30	16	46.5	G 1/8	27.75	47.5	M6	M10x1,25	16	5
40 mm	24	13.5	35	35	16	53	G 1/4	33.25	53	M8	M12x1,25	18	6
50 mm	32	17	40	40	16	65	G 1/4	31	65	M10	M16x1,5	24	8
63 mm	32	17	45	45	16	75	G 3/8	38.25	75	M10	M16x1,5	24	8
80 mm	40	21	45	45	17	95	G 3/8	38.25	95	M12	M20x1,5	30	10
100 mm	40	21	55	55	17	115	G 1/2	42.25	115	M12	M20x1,5	30	10
125 mm	54	28	60	60	20	140	G 1/2	53.85	140	M16	M27x2	41	13.5

Piston Ø	ØMM f8	PL	L2	L3 ±0,5	L8	RT	SW	TG	VA -1	VD	WH
32 mm	12	16	16.25	4.5	94±0,4	M6	10	32,5±0,5	4	5	26±1,4
40 mm	16	20	18.25	4.5	105±0,7	M6	13	38±0,5	4	5	30±1,4
50 mm	20	19	25	4.5	106±0,7	M8	17	46,5±0,6	4	5	37±1,4
63 mm	20	24	25	4.5	121±0,8	M8	17	56,5±0,7	4	5	37±1,8
80 mm	25	23.5	33	0	128±0,8	M10	22	72±0,7	4	5	46±1,8
100 mm	25	25	36	0	138±1	M10	22	89±0,7	4	5	51±1,8
125 mm	32	33	45	0	160±1	M12	27	110±1,1	6	7	65±2,2

Diagrams

Cushioning diagram

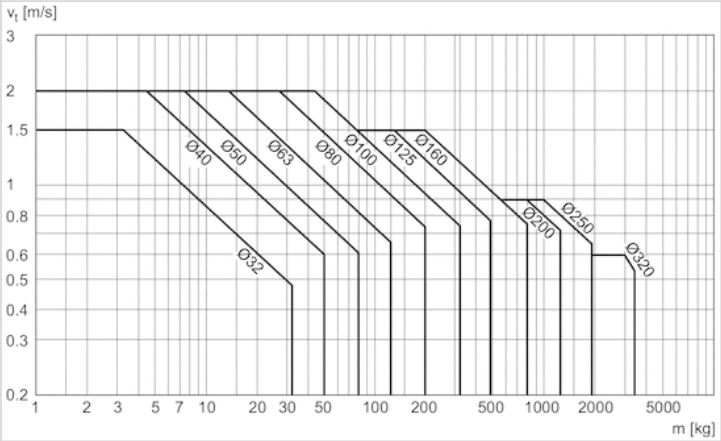

v = Piston velocity [m/s]
m = Cushionable mass [kg]

Accessories overview

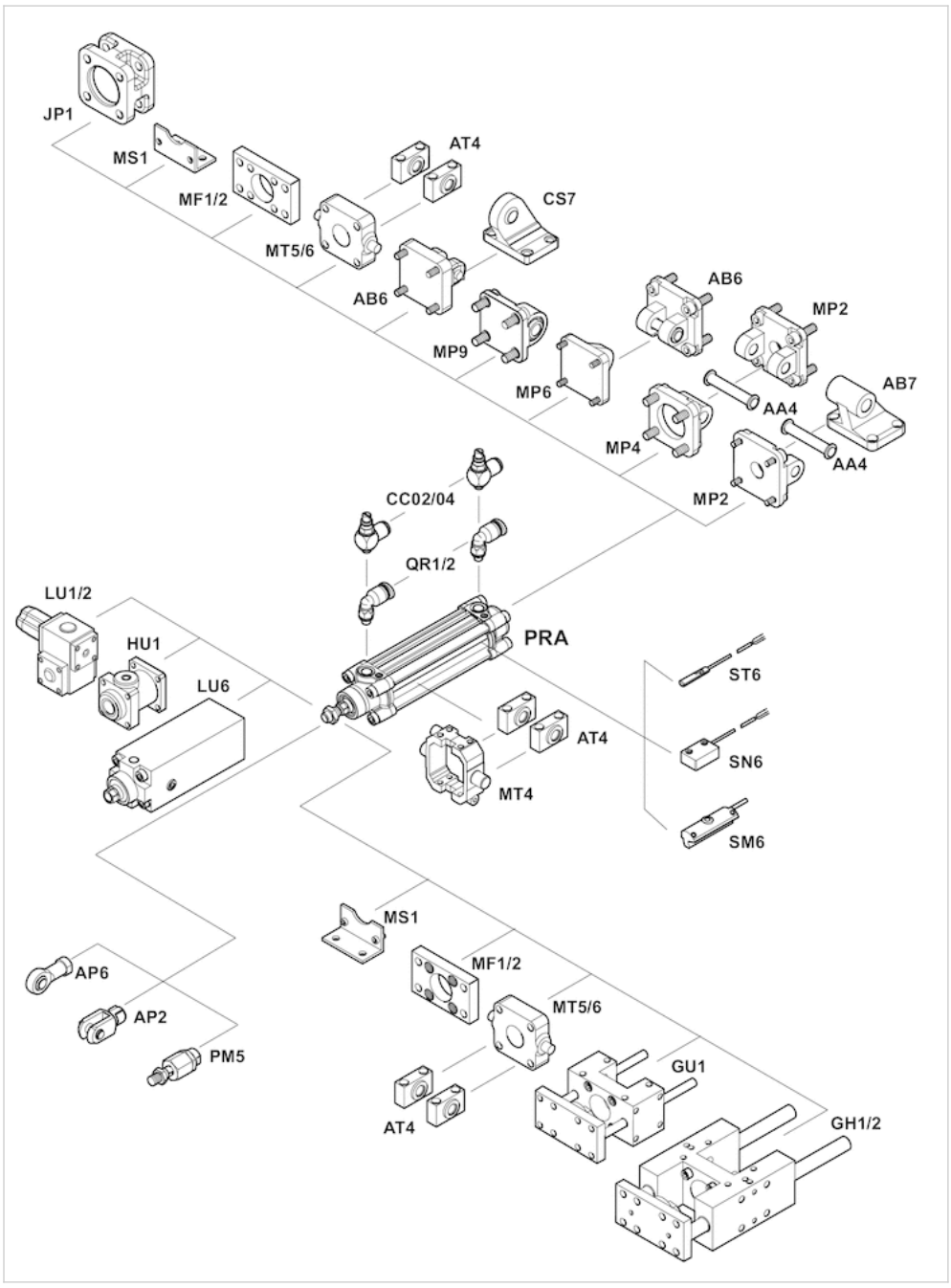

Profile cylinder ISO 15552, PRA series

- Ø 32-125 mm
- Ports G 1/8 G 1/4 G 3/8 G 1/2
- double-acting
- with magnetic piston
- Cushioning pneumatically adjustable
- Piston rod External thread
- Piston rod protection Bellows



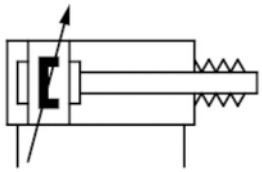

Standards	ISO 15552
Compressed air connection	Internal thread
Working pressure min./max.	1.5 ... 10 bar
Ambient temperature min./max.	-20 ... 80 °C
Medium temperature min./max.	-20 ... 80 °C
Medium	Compressed air
Max. particle size	50 µm
Oil content of compressed air	0 ... 5 mg/m³
Pressure for determining piston forces	6.3 bar

Technical data

Piston Ø Piston rod thread Ports Piston rod Ø	32 mm M10x1,25 G 1/8 12 mm	40 mm M12x1,25 G 1/4 16 mm	50 mm M16x1,5 G 1/4 20 mm	63 mm M16x1,5 G 3/8 20 mm	80 mm M20x1,5 G 3/8 25 mm	100 mm M20x1,5 G 1/2 25 mm
Stroke 25	R481602057	R481602065	R481602076	R481602087	R481602098	R481602109
50	R481602058	R481602066	R481602077	R481602088	R481602099	R481602110
80	R481602059	R481602067	R481602078	R481602089	R481602100	R481602111
100	R481602060	R481602068	R481602079	R481602090	R481602101	R481602112
125	R481602061	R481602069	R481602080	R481602091	R481602102	R481602113
160	R481602062	R481602070	R481602081	R481602092	R481602103	R481602114
200	R481602063	R481602071	R481602082	R481602093	R481602104	R481602115
250	R481602064	R481602072	R481602083	R481602094	R481602105	R481602116
320	-	R481602073	R481602084	R481602095	R481602106	R481602117
400	-	R481602074	R481602085	R481602096	R481602107	R481602118
500	-	R481602075	R481602086	R481602097	R481602108	R481602119

Piston Ø Piston rod thread Ports Piston rod Ø	125 mm M27x2 G 1/2 32 mm
Stroke 25	R481602120
50	R481602121
80	R481602122
100	R481602123
125	R481602124
160	R481602125
200	R481602126
250	R481602127
320	R481602128
400	R481602129
500	R481602130

Technical data

Piston Ø	32 mm	40 mm	50 mm	63 mm	80 mm	100 mm	125 mm
Retracting piston force	435 N	660 N	1035 N	1765 N	2855 N	4635 N	7220 N
Extracting piston force	505 N	790 N	1235 N	1960 N	3165 N	4945 N	7725 N
Cushioning length	16.5 mm	19 mm	17 mm	16.5 mm	19.5 mm	19.5 mm	22 mm
Cushioning energy	4.8 J	9 J	15 J	27 J	54 J	88 J	140 J
Speed max.	1 m/s	1 m/s	0.7 m/s	0.7 m/s	0.7 m/s	0.7 m/s	0.6 m/s
Stroke max.	250 mm	500 mm	750 mm	1000 mm	1000 mm	1000 mm	1000 mm

Technical information

The pressure dew point must be at least 15 °C under ambient and medium temperature and may not exceed 3 °C .
The oil content of compressed air must remain constant during the life cycle.
Use only the approved oils from AVENTICS. Further information can be found in the “Technical information” document (available in the MediaCentre).

Technical information

Material	
Cylinder tube	Aluminum, anodized
Piston rod	Stainless steel
Front cover	Die-cast aluminum
End cover	Die-cast aluminum
Seal	Polyurethane
Nut for piston rod	Steel, galvanized
Scraper	Polyurethane
Bellow	Carboxylated nitrile rubber

Dimensions

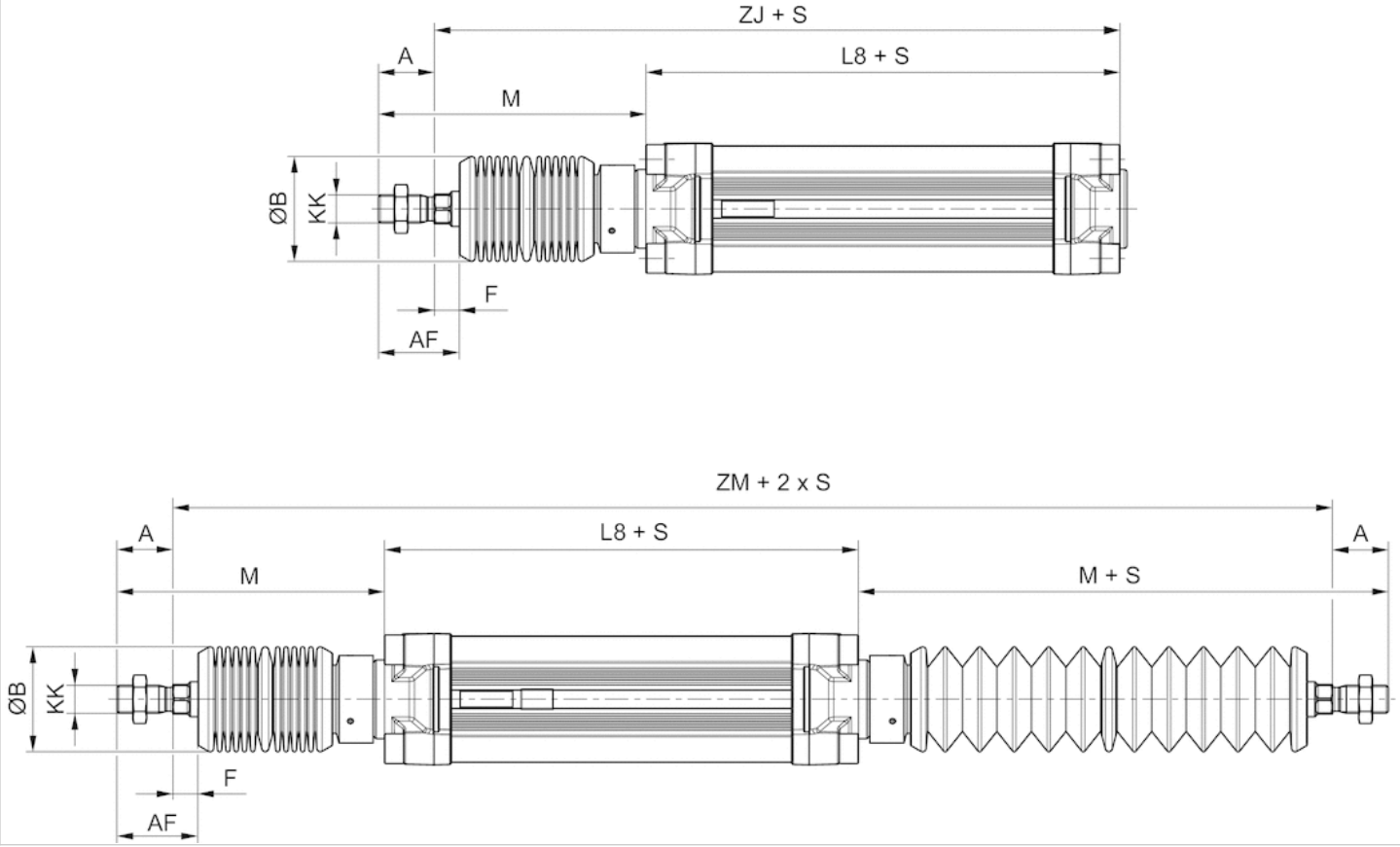

S = stroke

Dimensions

Piston Ø	A	Ø B	KK	L8	AF	F
32 mm	22	42	M10x1.25	94	34	12
40 mm	24	42	M12x1.25	105	39	15
50 mm	32	64	M16x1,5	106	47	15
63 mm	32	64	M16x1,5	121	47	15
80 mm	40	64	M20x1,5	128	57	17
100 mm	40	64	M20x1,5	138	57	17
125 mm	54	94	M27x2	160	71	17

Stroke-dependent dimensions

Piston Ø	S=0-75 M	S=0-75 ZJ	S=0-75 ZM	S=76-150 M	S=76-150 ZJ
32 mm	81	153	212	107	179
40 mm	138	219	333	138	219
50 mm	153	227	348	153	227
63 mm	153	242	363	153	242
80 mm	170	258	388	170	258
100 mm	160	258	378	160	258
125 mm	188	294	418	188	294

Piston Ø	S=76-150 ZM	S=151-250 M	S=151-250 ZJ	S=151-250 ZM
32 mm	264	127	199	304
40 mm	333	138	219	333
50 mm	348	153	227	348
63 mm	363	153	242	363
80 mm	388	170	258	388
100 mm	378	160	258	378
125 mm	428	188	294	428

Piston Ø	S=251-5000 M	S=251-500 ZJ	S=251-500 ZM	S=501-750 M
32 mm	–	–	–	–
40 mm	218	299	493	–
50 mm	233	307	508	313
63 mm	233	322	523	313
80 mm	250	338	548	330
100 mm	220	318	498	280
125 mm	248	354	548	308

Piston Ø	S=501-750 ZJ	S=501-750 ZM	S=751-1000 M	S=751-1000 ZJ
32 mm	–	–	–	–
40 mm	–	–	-	-
50 mm	387	668	-	-
63 mm	402	683	394	483
80 mm	418	708	411	499
100 mm	378	618	340	438
125 mm	414	668	368	474

Piston Ø	S=751-1000 ZM
32 mm	–
40 mm	-
50 mm	-
63 mm	845
80 mm	870
100 mm	738
125 mm	788

S = stroke

Weight [kg]

Piston Ø	Stroke	Weight 0 mm stroke	Weight +10 mm stroke
32	0-75	0,603	0.022
32	76-150	0,665	0.022
32	151-250	0,721	0.022
40	0-125	0,894	0.032
40	126-250	0,933	0.032
40	251-350	1,011	0.032
40	351-500	1,173	0.032
50	0-130	1,443	0.047
50	131-250	1,545	0.047
50	251-500	1,648	0.047
50	501-630	1,944	0.047
50	631-750	2,24	0.047
50	751-1000	2,538	0.047
63	0-130	1,808	0.054
63	131-250	1,911	0.054
63	251-500	2,013	0.054
63	501-630	2,309	0.054
63	631-750	2,605	0.054
63	751-1000	2,904	0.054
80	0-130	2,892	0.085
80	131-250	2,994	0.085
80	251-500	3,095	0.085
80	501-630	3,499	0.085
80	631-750	3,902	0.085
80	751-1000	4,31	0.085
100	0-125	3,988	0.1
100	126-250	4,09	0.1
100	251-500	4,191	0.1
100	501-600	4,519	0.1
100	601-750	4,847	0.1
100	751-1000	5,175	0.1
125	0-125	7,484	0.15
125	126-250	7,65	0.15
125	251-500	7,816	0.15
125	501-600	8,354	0.15
125	601-750	8,892	0.15
125	751-1000	9,429	0.15

Diagrams

Cushioning diagram

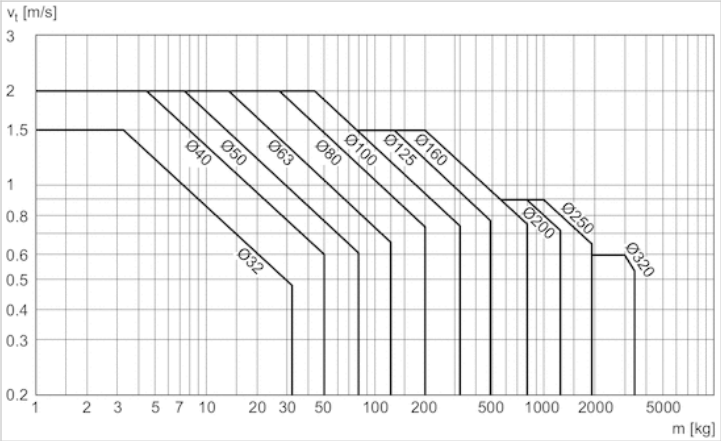

v = Piston velocity [m/s]
m = Cushionable mass [kg]

Accessories overview

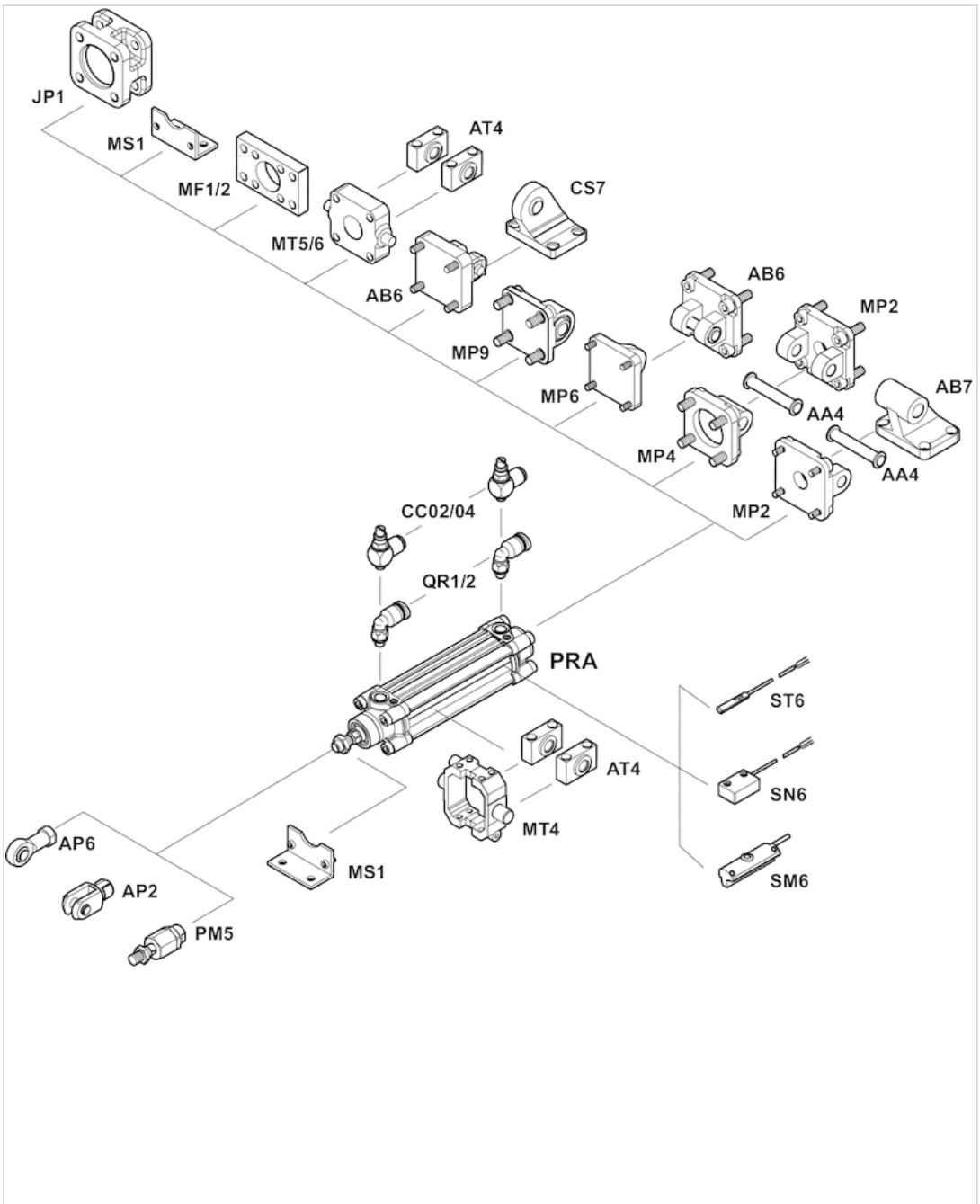

Profile cylinder ISO 15552, PRA series

- Ø 32-63 mm
- Ports G 1/8 G 1/4 G 3/8
- double-acting
- with magnetic piston
- Cushioning pneumatically adjustable
- Piston rod External thread
- Piston rod non-rotating



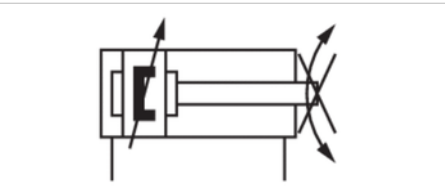

Standards	ISO 15552
Compressed air connection	Internal thread
Working pressure min./max.	1.5 ... 10 bar
Ambient temperature min./max.	-20 ... 80 °C
Medium temperature min./max.	-20 ... 80 °C
Medium	Compressed air
Max. particle size	50 µm
Oil content of compressed air	0 ... 5 mg/m³
Pressure for determining piston forces	6.3 bar

Technical data

Piston Ø Piston rod thread Ports Piston rod Ø	32 mm M10x1,25 G 1/8 12 mm	40 mm M12x1,25 G 1/4 16 mm	50 mm M16x1,5 G 1/4 20 mm	63 mm M16x1,5 G 3/8 20 mm
Stroke 25	R481601969	R481601980	R481601991	R481602002
50	R481601970	R481601981	R481601992	R481602003
80	R481601971	R481601982	R481601993	R481602004
100	R481601972	R481601983	R481601994	R481602005
125	R481601973	R481601984	R481601995	R481602006
160	R481601974	R481601985	R481601996	R481602007
200	R481601975	R481601986	R481601997	R481602008
250	R481601976	R481601987	R481601998	R481602009
320	R481601977	R481601988	R481601999	R481602010
400	R481601978	R481601989	R481602000	R481602011
500	R481601979	R481601990	R481602001	R481602012

Technical data

Piston Ø	32 mm	40 mm	50 mm	63 mm
Retracting piston force	435 N	660 N	1035 N	1765 N
Extracting piston force	505 N	790 N	1235 N	1960 N
Cushioning length	16.5 mm	19 mm	17 mm	16.5 mm
Cushioning energy	4.8 J	9 J	15 J	27 J
Torque for torsion protection, max.	0.75 Nm	1.5 Nm	2 Nm	2 Nm
Rotation angle tolerance (±)	1.8 °	1.6 °	1.4 °	1.4 °
Weight 0 mm stroke	0.5 kg	0.65 kg	1.06 kg	1.42 kg
Weight +10 mm stroke	0.022 kg	0.032 kg	0.047 kg	0.054 kg
Stroke max.	1500 mm	1500 mm	1500 mm	1500 mm

Technical information

The pressure dew point must be at least 15 °C under ambient and medium temperature and may not exceed 3 °C .
The oil content of compressed air must remain constant during the life cycle.
Use only the approved oils from AVENTICS. Further information can be found in the “Technical information” document (available in the MediaCentre).

Technical information

Material	
Cylinder tube	Aluminum, anodized
Piston rod	Stainless steel
Front cover	Die-cast aluminum
End cover	Die-cast aluminum
Seal	Polyurethane
Nut for piston rod	Steel, galvanized
Scraper	Polyurethane

Dimensions

Dimensions

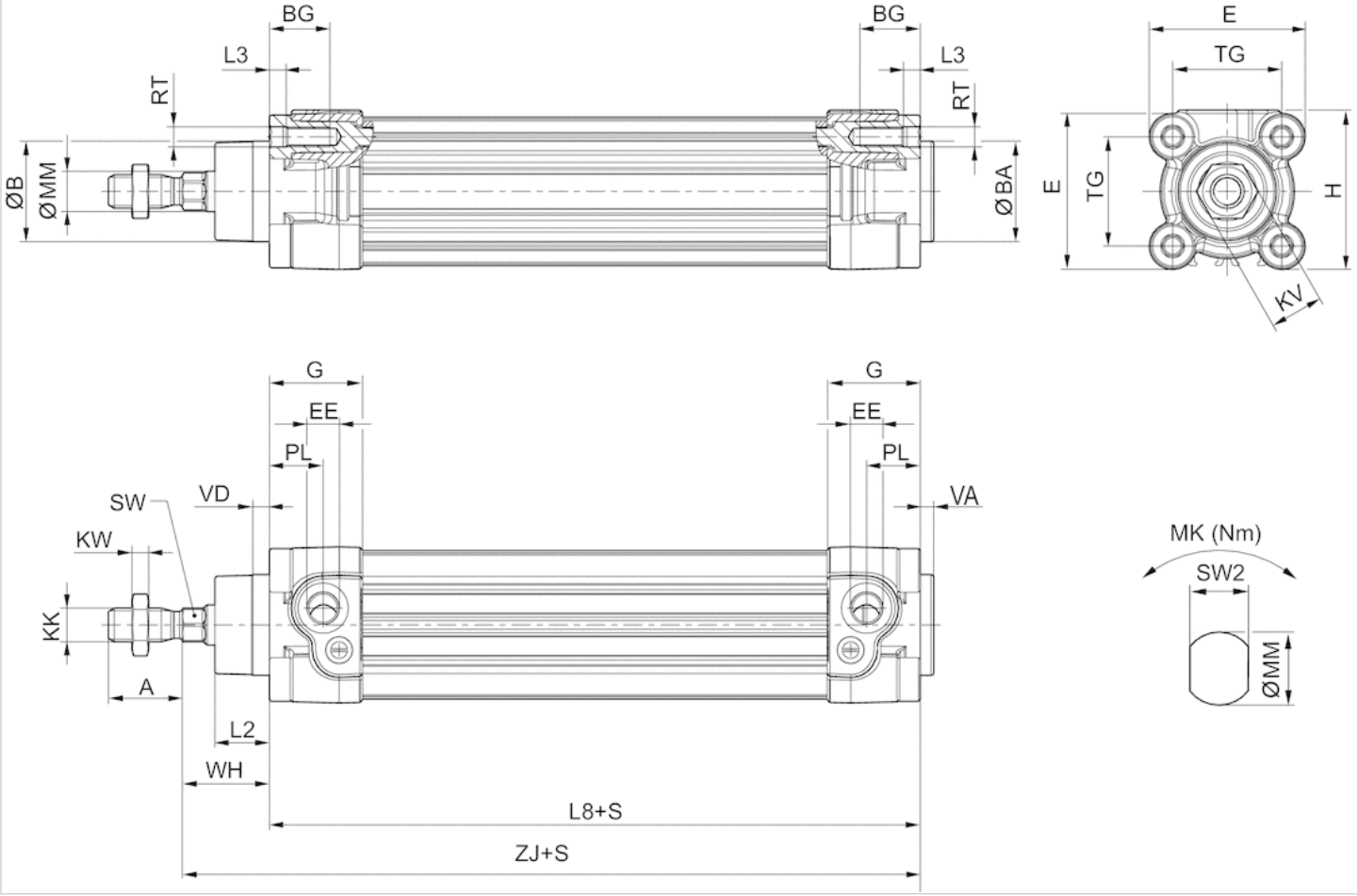

S = stroke

Dimensions

Piston Ø	A -2	ØB d11	ØBA d11	BG min.	E	EE	G	H	KK	KV	KW	ØMM f8	PL
32 mm	22	30	30	16	46.5	G 1/8	27.75	47.5	M10x1,25	16	5	12	16
40 mm	24	35	35	16	53	G 1/4	33.25	53	M12x1,25	18	6	16	20
50 mm	32	40	40	16	65	G 1/4	31	65	M16x1,5	24	8	20	19
63 mm	32	45	45	16	75	G 3/8	38.25	75	M16x1,5	24	8	20	24

Piston Ø	L2	L3 ±0,5	L8	RT	SW	TG	VA -1	VD	WH	ZJ	MK	SW2
32 mm	16.25	4.5	94±0,4	M6	10	32,5±0,5	4	5	26±1,4	120	0,75	10
40 mm	18.25	4.5	105±0,7	M6	13	38±0,5	4	5	30±1,4	135	1,5	13
50 mm	25	4.5	106±0,7	M8	16*	46,5±0,6	4	5	37±1,4	143	2	16
63 mm	25	4.5	121±0,8	M8	16*	56,5±0,7	4	5	37±1,8	158	2	16

* not according to ISO 15552

Diagrams

Cushioning diagram

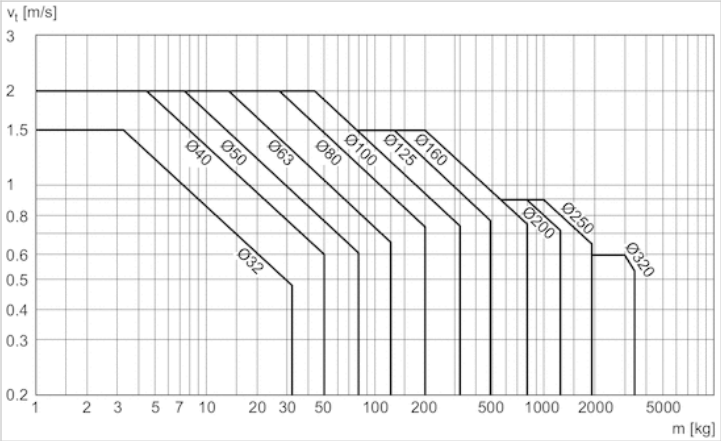

v = Piston velocity [m/s]
m = Cushionable mass [kg]

Accessories overview

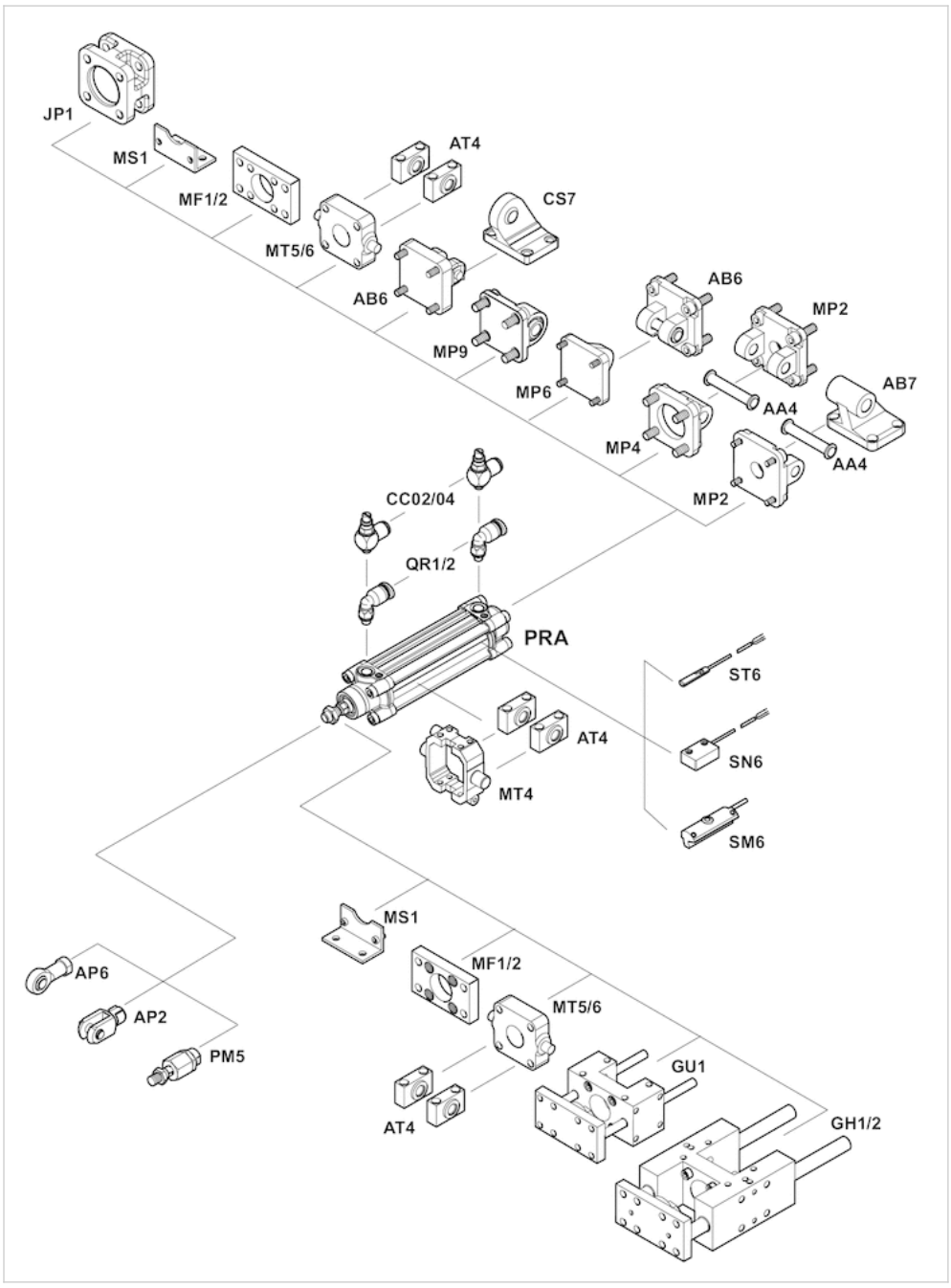

Profile cylinder ISO 15552, Series PRA - inch

- Ø 32-125 mm
- Ports 1/8 NPT 1/4 NPT 3/8 NPT 1/2 NPT
- double-acting
- with magnetic piston
- Cushioning pneumatically, pneumatically adjustable
- Piston rod External thread



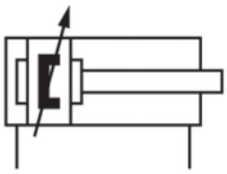

Compressed air connection	Internal thread
Ambient temperature min./max.	-20 ... 80 °C
Medium temperature min./max.	-20 ... 80 °C
Medium	Compressed air
Max. particle size	50 µm
Oil content of compressed air	0 ... 5 mg/m³
Pressure for determining piston forces	6.3 bar

Technical data

Piston Ø Piston rod thread Ports Piston rod Ø	32 mm 7/16-20 UNF 1/8 NPT 12 mm	40 mm 1/2-20 UNF 1/4 NPT 16 mm	50 mm 3/4-16 UNF 1/4 NPT 20 mm	63 mm 3/4-16 UNF 3/8 NPT 20 mm	80 mm 3/4-16 UNF 3/8 NPT 25 mm	100 mm 3/4-16 UNF 1/2 NPT 25 mm
Stroke 25.4	R480176154	R480176238	R480176328	R480176417	R480176506	R480176593
50.8	R480176162	R480176251	R480176334	R480176427	R480176510	R480176601
76.2	R480176169	R480176257	R480176345	R480176437	R480176523	R480176609
101.6	R480176174	R480176263	R480176354	R480176441	R480176526	R480176614
127	R480176187	R480176275	R480176363	R480176452	R480176534	R480176626
152.4	R480176190	R480176280	R480176370	R480176459	R480176546	R480176633
177.8	R480176201	R480176293	R480176377	R480176464	R480176554	R480176641
203.2	R480176209	R480176298	R480176383	R480176472	R480176561	R480176646
228.6	R480176218	R480176304	R480176395	R480176480	R480176567	R480176660
254	R480176228	R480176316	R480176400	R480176490	R480176581	R480176665
304.8	R480176232	R480176321	R480176412	R480176500	R480176585	R480176676

Piston Ø Piston rod thread Ports Piston rod Ø	125 mm 1-14 UNF 1/2 NPT 32 mm
Stroke 25.4	R480176685
50.8	R480176689
76.2	R480176694
101.6	R480176707
127	R480176712
152.4	R480176721
177.8	R480176729
203.2	R480176736
228.6	R480176746
254	R480176754
304.8	R480176761

Technical data

Piston Ø	32 mm	40 mm	50 mm	63 mm
Retracting piston force	435 N	660 N	1035 N	1765 N
Extracting piston force	505 N	790 N	1235 N	1960 N
Cushioning length	16.5 mm	19 mm	17 mm	16.5 mm
Cushioning energy	4.8 J	9 J	15 J	27 J
Weight 0 mm stroke	0.5 kg	0.65 kg	1.06 kg	1.42 kg
Weight +10 mm stroke	0.022 kg	0.032 kg	0.047 kg	0.054 kg
Working pressure min./max.	2 ... 10 bar	2 ... 10 bar	2 ... 10 bar	2 ... 10 bar
Stroke max.	1600 mm	1900 mm	2100 mm	2500 mm

Piston Ø	80 mm	100 mm	125 mm
Retracting piston force	2855 N	4635 N	7220 N
Extracting piston force	3165 N	4945 N	7725 N
Cushioning length	19.5 mm	19.5 mm	22 mm
Cushioning energy	54 J	88 J	140 J
Weight 0 mm stroke	2.37 kg	3.51 kg	6.72 kg
Weight +10 mm stroke	0.085 kg	0.1 kg	0.15 kg
Working pressure min./max.	2 ... 10 bar	2 ... 10 bar	2 ... 10 bar
Stroke max.	2800 mm	2800 mm	2750 mm

Technical information

The pressure dew point must be at least 15 °C under ambient and medium temperature and may not exceed 3 °C .
The oil content of compressed air must remain constant during the life cycle.
Use only the approved oils from AVENTICS. Further information can be found in the “Technical information” document (available in the MediaCentre).

Technical information

Material	
Cylinder tube	Aluminum, anodized
Piston rod	Stainless steel
Front cover	Die-cast aluminum
End cover	Die-cast aluminum
Seal	Polyurethane
Nut for piston rod	Steel, galvanized
Scraper	Polyurethane

Dimensions

Dimensions

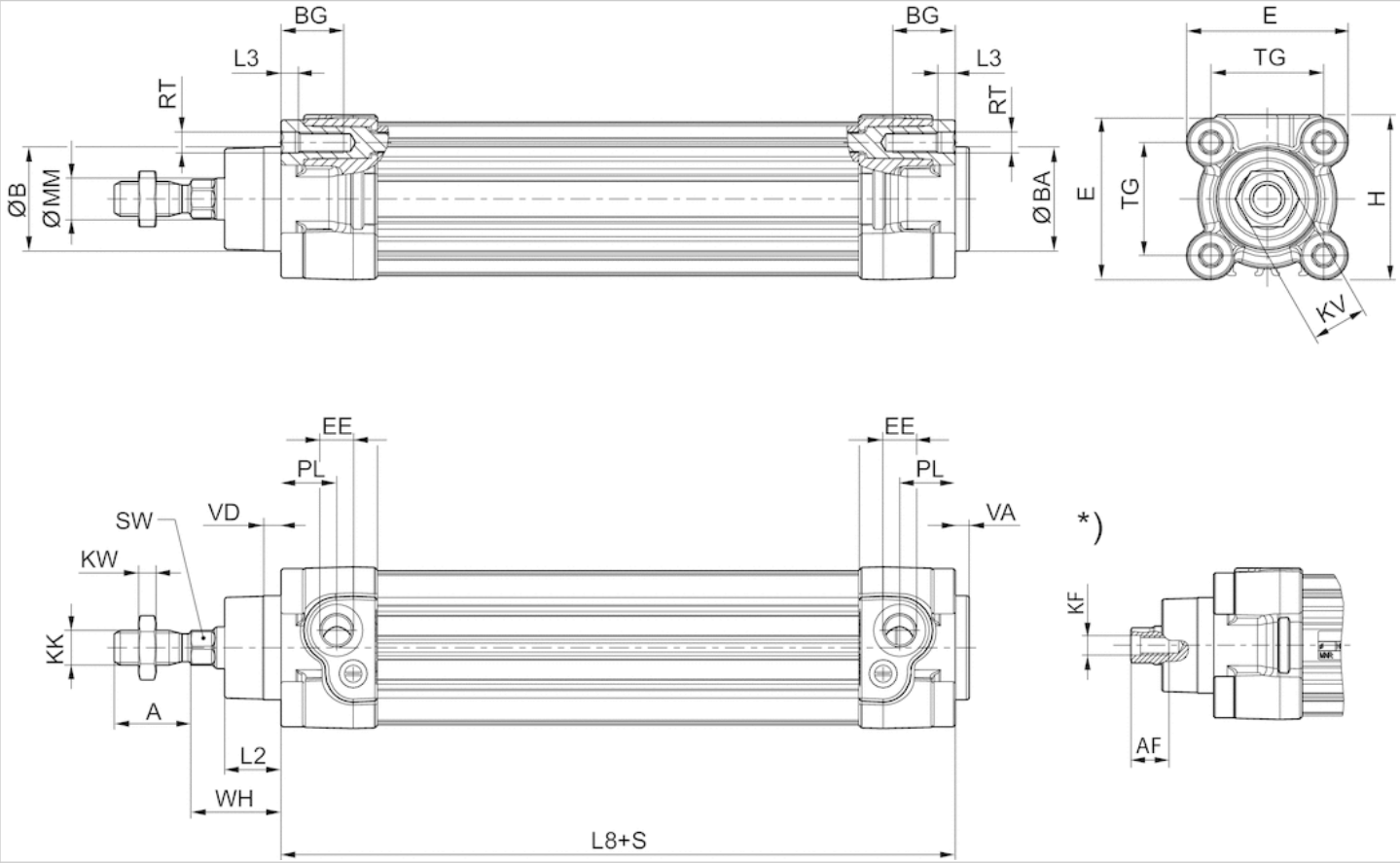

S = stroke
*) For cylinders with optional piston road with internal thread

Dimensions

Piston Ø	A -2	ØB d11	ØBA d11	BG min.	E	EE inch	EE	H	KK inch	KK
32 mm	22	30	30	16	46.5	1/8 NPT	G 1/8	47.5	7/16 - 20 UNF	M10x1,25
40 mm	24	35	35	16	53	1/4 NPT	G 1/4	53	1/2 - 20 UNF	M12x1,25
50 mm	32	40	40	16	65	1/4 NPT	G 1/4	65	3/4 - 16 UNF	M16x1,5
63 mm	32	45	45	16	75	3/8 NPT	G 3/8	75	3/4 - 16 UNF	M16x1,5
80 mm	40	45	45	17	95	3/8 NPT	G 3/8	95	3/4 - 16 UNF	M20x1,5
100 mm	40	55	55	17	115	1/2 NPT	G 1/2	115	3/4 - 16 UNF	M20x1,5
125 mm	54	60	60	20	140	1/2 NPT	G 1/2	140	1 - 14 UNF	M27x2

Piston Ø	KV	KW	ØMM f8	PL	L2	L3 ±0,5	L8	RT	SW	TG	VA -1	VD	WH
32 mm	16	5	12	16	16.25	4.5	94±0,4	M6	10	32,5±0,5	4	5	26±1,4
40 mm	18	6	16	20	18.25	4.5	105±0,7	M6	13	38±0,5	4	5	30±1,4
50 mm	24	8	20	19	25	4.5	106±0,7	M8	17	46,5±0,6	4	5	37±1,4
63 mm	24	8	20	24	25	4.5	121±0,8	M8	17	56,5±0,7	4	5	37±1,8
80 mm	30	10	25	23.5	33	0	128±0,8	M10	22	72±0,7	4	5	46±1,8
100 mm	30	10	25	25	36	0	138±1	M10	22	89±0,7	4	5	51±1,8
125 mm	41	13.5	32	33	45	0	160±1	M12	27	110±1,1	6	7	65±2,2

Diagrams

Cushioning diagram

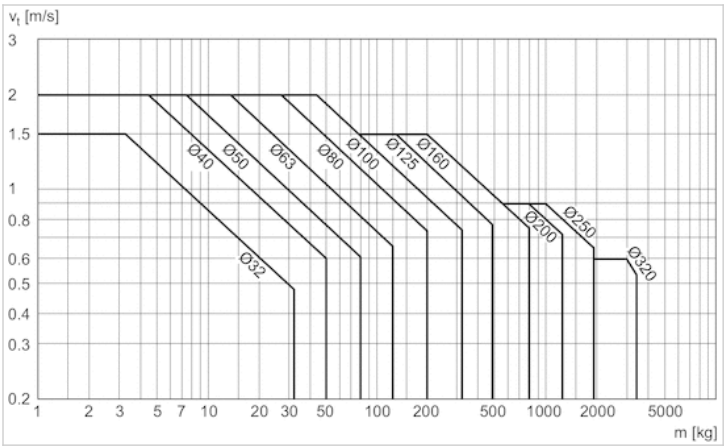

v = Piston velocity [m/s]
m = Cushionable mass [kg]

Accessories overview

Overview drawing

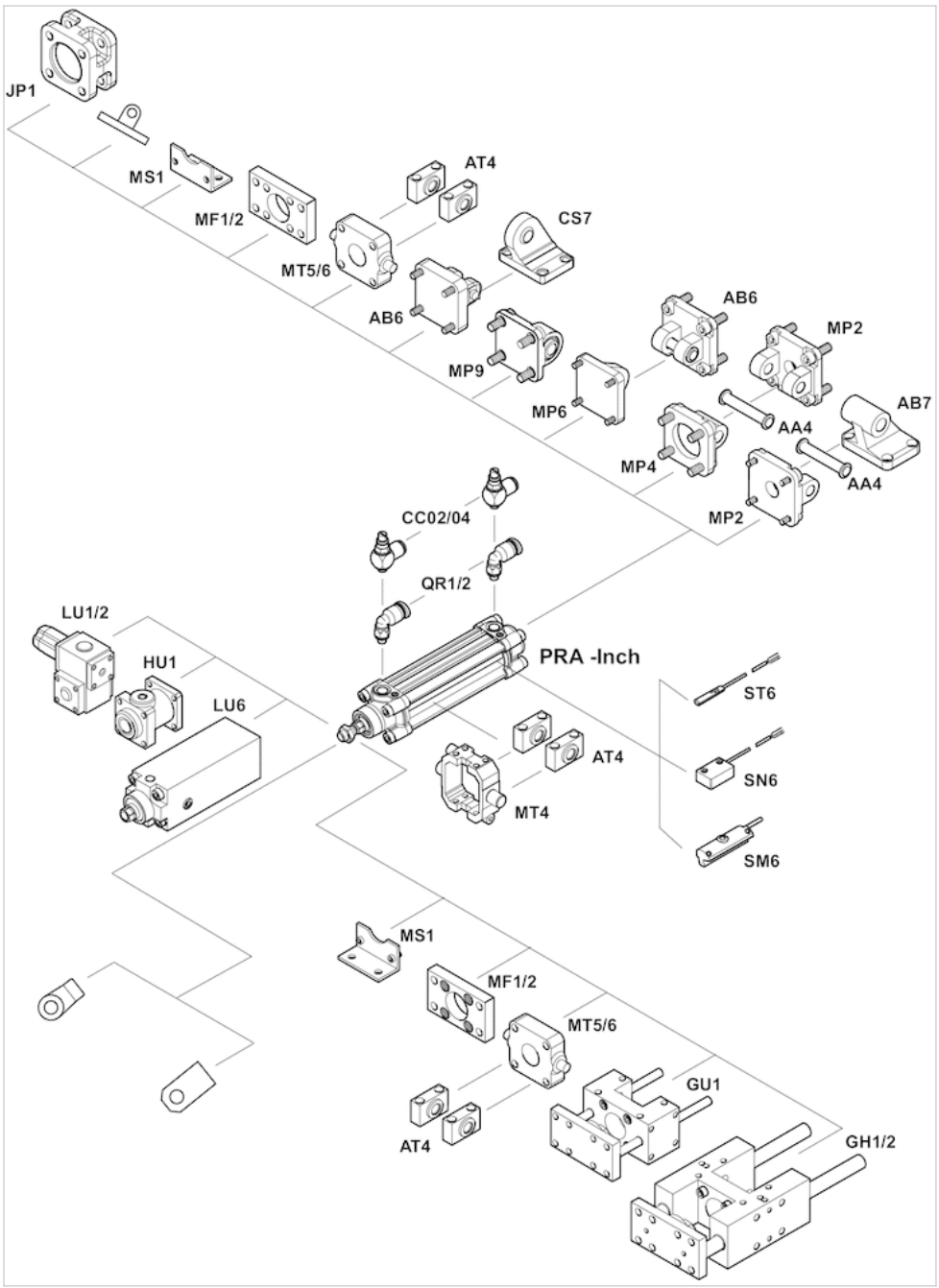

NOTE:
This overview drawing is only for orientation to indicate where the various accessory parts can be fastened to the cylinder. The illustration has been simplified for this purpose. It is thus not possible to derive the dimensions from this overview.

Profile cylinder ISO 15552, Series PRA - inch

- Ø 32-125 mm
- Ports 1/8 NPT 1/4 NPT 3/8 NPT 1/2 NPT
- double-acting
- with magnetic piston
- Cushioning pneumatically, pneumatically adjustable
- Piston rod External thread
- Piston rod through
- ATEX optional



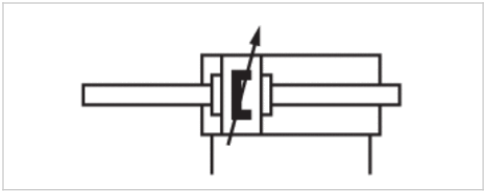

Compressed air connection	Internal thread
Working pressure min./max.	2 ... 10 bar
Ambient temperature min./max.	-20 ... 80 °C
Medium temperature min./max.	-20 ... 80 °C
Medium	Compressed air
Max. particle size	50 µm
Oil content of compressed air	0 ... 5 mg/m³
Pressure for determining piston forces	6.3 bar

Technical data

Piston Ø Piston rod thread Ports Piston rod Ø	32 mm 7/16-20 UNF 1/8 NPT 12 mm	40 mm 1/2-20 UNF 1/4 NPT 16 mm	50 mm 3/4-16 UNF 1/4 NPT 20 mm	63 mm 3/4-16 UNF 3/8 NPT 20 mm	80 mm 3/4-16 UNF 3/8 NPT 25 mm	100 mm 3/4-16 UNF 1/2 NPT 25 mm
Stroke 25.4	R480176152	R480176240	R480176332	R480176414	R480176507	R480176597
50.8	R480176160	R480176248	R480176341	R480176423	R480176517	R480176604
76.2	R480176173	R480176255	R480176348	R480176435	R480176519	R480176612
101.6	R480176175	R480176267	R480176356	R480176440	R480176533	R480176615
127	R480176182	R480176276	R480176359	R480176448	R480176535	R480176625
152.4	R480176191	R480176283	R480176366	R480176454	R480176542	R480176630
177.8	R480176204	R480176289	R480176378	R480176463	R480176555	R480176645
203.2	R480176212	R480176300	R480176389	R480176477	R480176559	R480176651
228.6	R480176214	R480176308	R480176391	R480176481	R480176573	R480176659
254	R480176226	R480176313	R480176404	R480176489	R480176577	R480176667
304.8	R480176236	R480176319	R480176408	R480176496	R480176582	R480176674

Piston Ø Piston rod thread Ports Piston rod Ø	125 mm 1-14 UNF 1/2 NPT 32 mm
Stroke 25.4	R480176680
50.8	R480176693
76.2	R480176700
101.6	R480176706
127	R480176715
152.4	R480176724
177.8	R480176726
203.2	R480176740
228.6	R480176749
254	R480176750
304.8	R480176762

Technical data

Piston Ø	32 mm	40 mm	50 mm	63 mm	80 mm	100 mm	125 mm
Retracting piston force	435 N	660 N	1035 N	1765 N	2855 N	4635 N	7220 N
Extracting piston force	435 N	660 N	1035 N	1765 N	2855 N	4635 N	7220 N
Cushioning length	16.5 mm	19 mm	17 mm	16.5 mm	19.5 mm	19.5 mm	22 mm
Cushioning energy	4.8 J	9 J	15 J	27 J	54 J	88 J	140 J
Weight 0 mm stroke	0.58 kg	0.8 kg	1.34 kg	1.72 kg	2.92 kg	4.08 kg	8.92 kg
Weight +10 mm stroke	0.031 kg	0.048 kg	0.072 kg	0.079 kg	0.124 kg	0.139 kg	0.22 kg
Stroke max.	1600 mm	1900 mm	2100 mm	2500 mm	2800 mm	2800 mm	2750 mm

Technical information

The pressure dew point must be at least 15 °C under ambient and medium temperature and may not exceed 3 °C .
The oil content of compressed air must remain constant during the life cycle.
Use only the approved oils from AVENTICS. Further information can be found in the “Technical information” document (available in the MediaCentre).

Technical information

Material	
Cylinder tube	Aluminum, anodized
Piston rod	Stainless steel
Front cover	Die-cast aluminum
End cover	Die-cast aluminum
Seal	Polyurethane
Nut for piston rod	Steel, galvanized
Scraper	Polyurethane

Dimensions

Dimensions

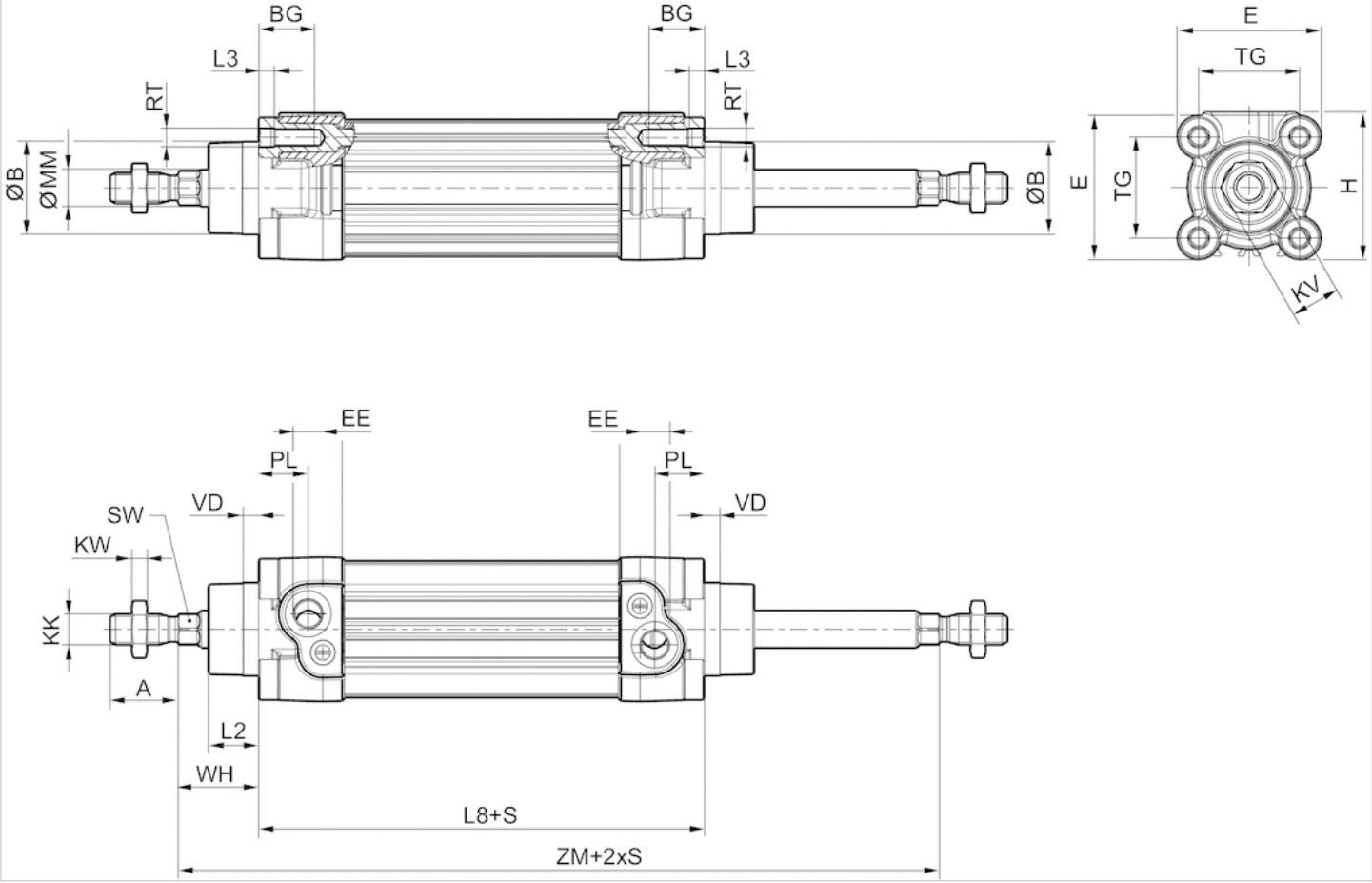

S = stroke

Dimensions

Piston Ø	A -2	ØB d11	BG min.	E	EE inch	EE	H	KK inch	KK	KV	KW
32 mm	22	30	16	46.5	1/8 NPT	G 1/8	47.5	7/16 - 20 UNF	M10x1,25	16	5
40 mm	24	35	16	53	1/4 NPT	G 1/4	53	1/2 -20 UNF	M12x1,25	18	6
50 mm	32	40	16	65	1/4 NPT	G 1/4	65	3/4 - 16 UNF	M16x1,5	24	8
63 mm	32	45	16	75	3/8 NPT	G 3/8	75	3/4 - 16 UNF	M16x1,5	24	8
80 mm	40	45	17	95	3/8 NPT	G 3/8	95	3/4 - 16 UNF	M20x1,5	30	10
100 mm	40	55	17	115	1/2 NPT	G 1/2	115	3/4 - 16 UNF	M20x1,5	30	10
125 mm	54	60	20	140	1/2 NPT	G 1/2	140	1 - 14 UNF	M27x2	41	13.5

Piston Ø	ØMM f8	PL	L2	L3 ±0,5	L8	RT	SW	TG	VD	WH	ZM
32 mm	12	16	16.25	4.5	94±0,4	M6	10	32,5±0,5	5	26±1,4	146+3/-1,5
40 mm	16	20	18.25	4.5	105±0,7	M6	13	38±0,5	5	30±1,4	165+3/-1,5
50 mm	20	19	25	4.5	106±0,7	M8	17	46,5±0,6	5	37±1,4	180+3/-1,5
63 mm	20	24	25	4.5	121±0,8	M8	17	56,5±0,7	5	37±1,8	195+3/-1,5
80 mm	25	23.5	33	0	128±0,8	M10	22	72±0,7	5	46±1,8	220+3/-1,5
100 mm	25	25	36	0	138±1	M10	22	89±0,7	5	51±1,8	240+3,5/-2
125 mm	32	33	45	0	160±1	M12	27	110±1,1	7	65±2,2	290+3,5/-2

Diagrams

Cushioning diagram

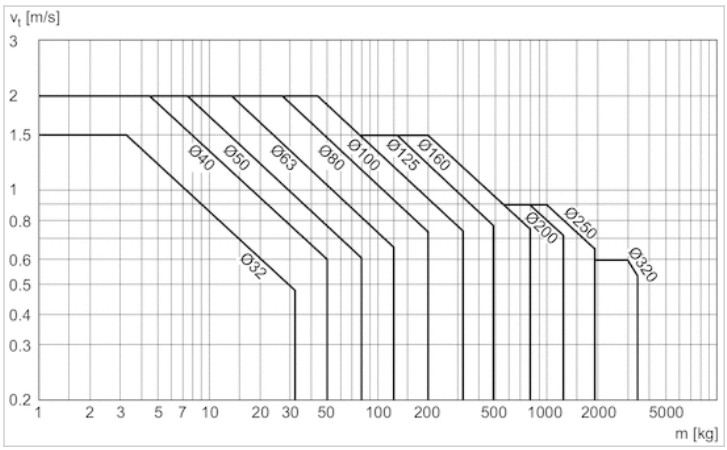

v = Piston velocity [m/s]
m = Cushionable mass [kg]

Accessories overview

Overview drawing

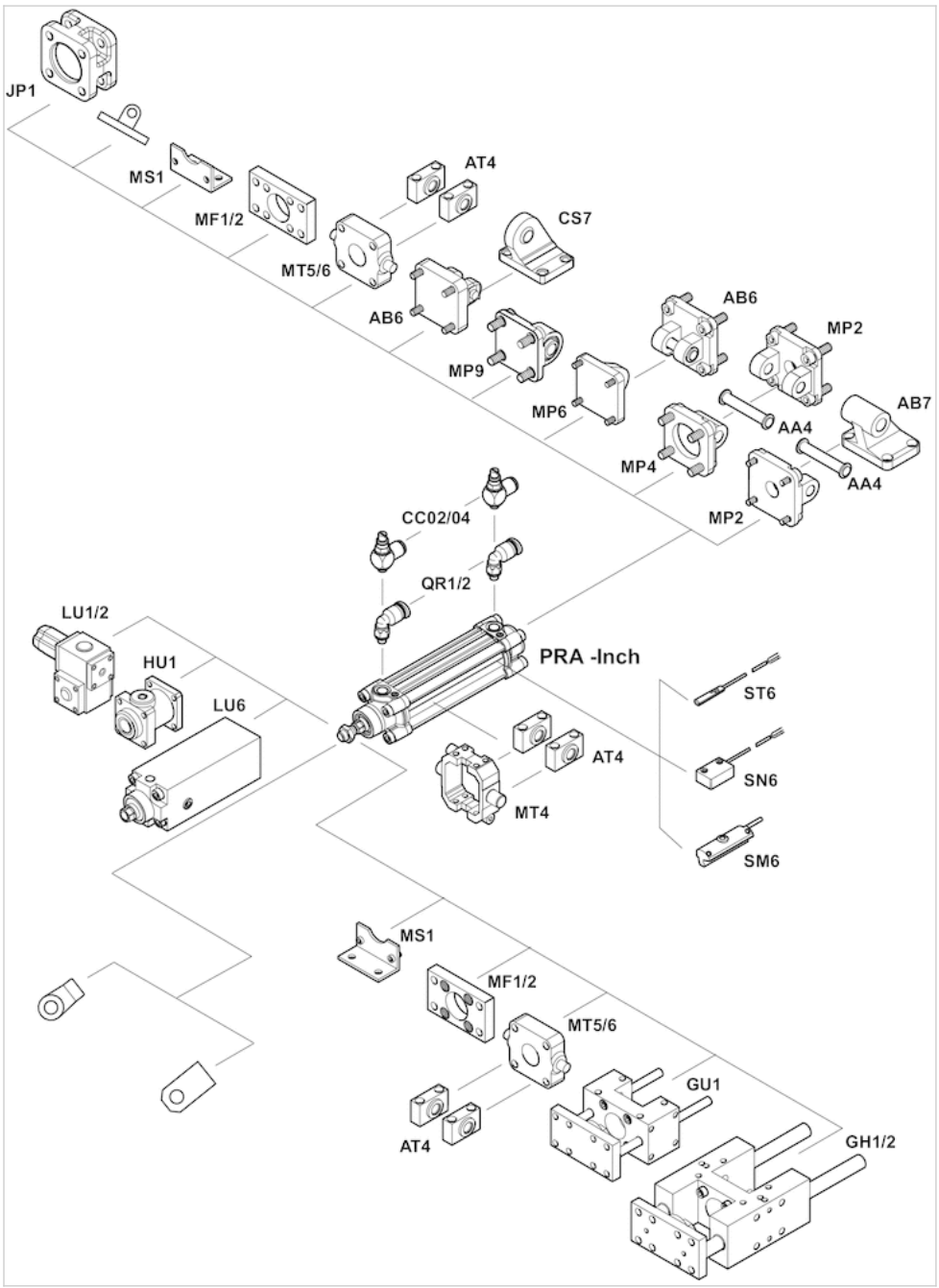

NOTE:
This overview drawing is only for orientation to indicate where the various accessory parts can be fastened to the cylinder. The illustration has been simplified for this purpose. It is thus not possible to derive the dimensions from this overview.

Bearing block AB7-HD, Series CM1

- Suitable for robust mechanical engineering applications, with fixed bearing
- Cylinder mounting in accordance with ISO 15552
- Suitable piston Ø 32 40 50 63 80 100 125 mm



Standards	ISO 15552

Technical data

Part No.	Piston Ø	Swivel bearing Ø
1825805275	32 mm	10 mm
1825805276	40 mm	12 mm
1825805277	50 mm	12 mm
1825805278	63 mm	16 mm
1825805279	80 mm	16 mm
1825805280	100 mm	20 mm
1825805281	125 mm	25 mm

Technical information

Material	
Material	Nodular graphite iron
	galvanized
Screws	galvanized steel

Dimensions

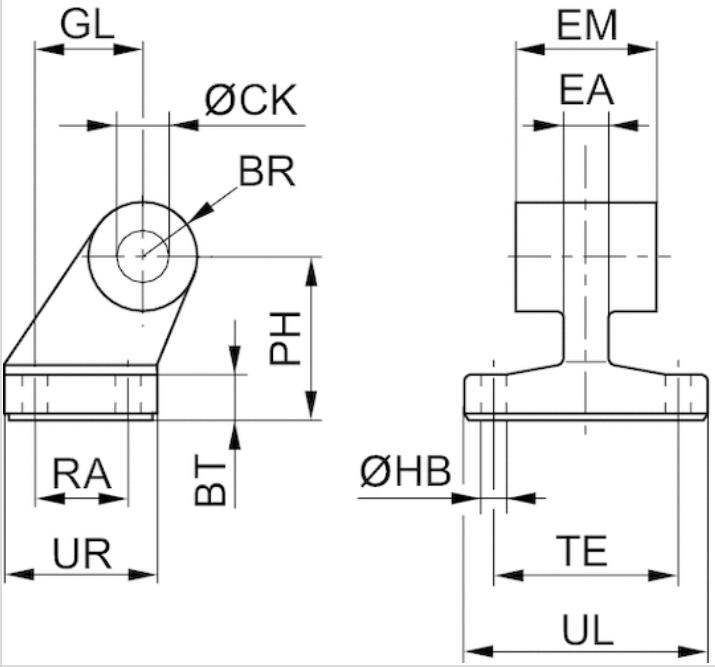

Dimensions

Part No.	Piston Ø	BR	BT	Ø CK H9	Ø HB H13	EM	GL JS14	EA max.	PH JS15
1825805275	32 mm	10	8	10	6.6	26 –0,2/–0,6	21	10	32
1825805276	40 mm	11	10	12	6.6	28 -0,2/-0,6	24	12	36
1825805277	50 mm	13	12	12	9	32 –0,2/–0,6	33	16	45
1825805278	63 mm	15	12	16	9	40 –0,2/–0,6	37	16	50
1825805279	80 mm	15	14	16	11	50 -0,2/–0,6	47	20	63
1825805280	100 mm	19	15	20	11	60 –0,2/–0,6	55	20	71
1825805281	125 mm	22,5	20	25	14	70 –0,5/–1,5	70	30	90

RA JS14	TE JS14	UL max.	UR max.
18	38	51	31
22	41	54	35
30	50	65	45
35	52	67	50
40	66	86	60
50	76	96	70
60	94	124	90

Bearing block CS7, Series CM1

- With ball joint and foot
- Cylinder mounting in accordance with VDMA 24562 part 2
- Suitable piston Ø 32 40 50 63 80 100 125 mm



Standards VDMA 24562 part 2

Technical data

Part No.	Piston Ø	Swivel bearing Ø
1827001784	32 mm	10 mm
1827001785	40 mm	12 mm
1827001786	50 mm	16 mm
1827001787	63 mm	16 mm
1827001788	80 mm	20 mm
1827001789	100 mm	20 mm
1827001790	125 mm	30 mm

Technical information

Material	
Material	Nodular graphite iron
	galvanized

Dimensions

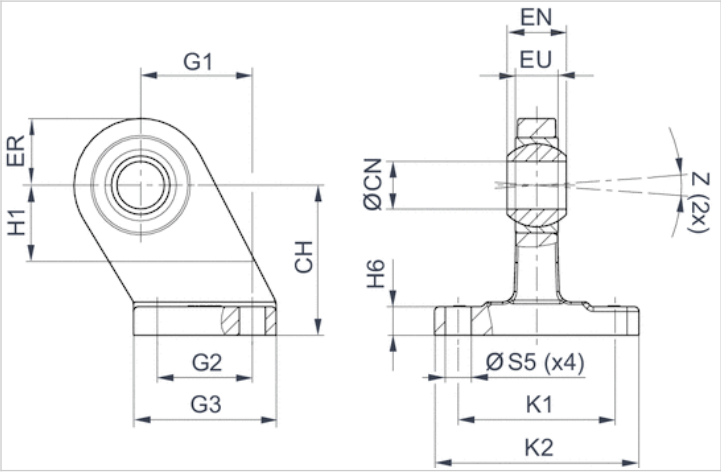

Dimensions

Part No.	Piston Ø	CH JS15	ØCN H7	EU max.	EN -1,0	ER max.	G1 JS14	G2 JS14	G3 max.
1827001784	32 mm	32	10	10.5	14	16	21	18	31
1827001785	40 mm	36	12	12	16	18	24	22	35
1827001786	50 mm	45	16	15	21	21	33	30	45
1827001787	63 mm	50	16	15	21	23	37	35	50
1827001788	80 mm	63	20	18	25	28	47	40	60
1827001789	100 mm	71	20	18	25	30	55	50	70
1827001790	125 mm	90	30	25	37	40	70	60	90

H1 min.	H6	K1 JS14	K2 max.	ØS5 H13	Z min.
16	9 ±1	38	51	6.6	4°
20	9 ±1	41	54	6.6	4°
22	11 ±1	50	65	9	4°
27	11 ±1	52	67	9	4°
31	12 ±1,5	66	86	11	4°
38	13 ±1,5	76	96	11	4°
40	17 ±1,5	94	124	14	4°

Clevis mounting AB6, Series CM1

- Cylinder mounting in accordance with ISO 15552
- Suitable piston Ø 32 40 50 63 80 100 125 mm



Standards ISO 15552

Technical data

Part No.	Piston Ø	Swivel bearing Ø
1827001593	32 mm	10 mm
1827001594	40 mm	12 mm
1827001595	50 mm	16 mm
1827002024	63 mm	16 mm
1827001597	80 mm	20 mm
1827001598	100 mm	20 mm
1827001599	125 mm	30 mm

Scope of delivery: clevis mounting incl. pivot pins and mounting screws

Technical information

Material	
Material	Aluminum (forged)
Screws	Steel
	galvanized

Dimensions

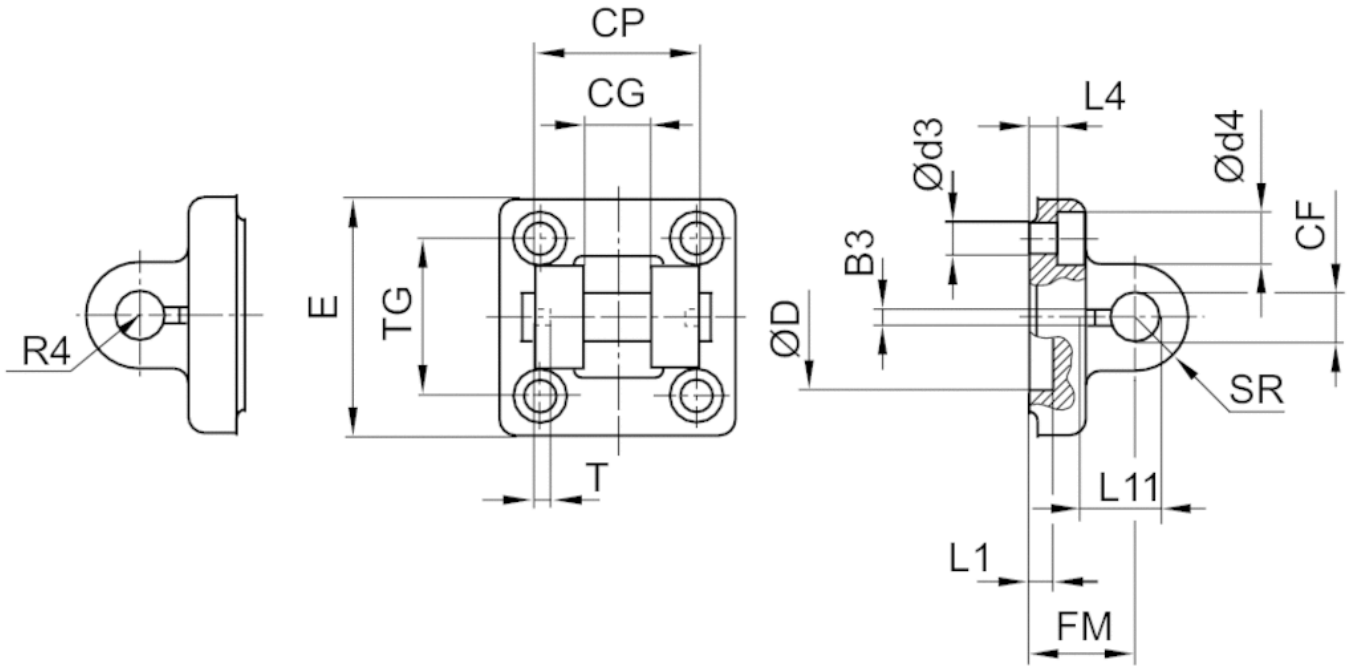

Dimensions

Part No.	Piston Ø	B3 ±0,2	Ø CF F7	CG D10	CP d12	Ø d3	Ø d4	Ø D	E	FM ±0,2
1827001593	32 mm	3.3	10	14	34	6.6	11	30	49	22
1827001594	40 mm	4.3	12	16	40	6.6	11	35	55	25
1827001595	50 mm	4.3	16	21	45	9	15	40	67	27
1827002024	63 mm	4.3	16	21	51	9	15	45	77	32
1827001597	80 mm	4.3	20	25	65	11	18	45	97	36
1827001598	100 mm	4.3	20	25	75	11	18	55	117	41
1827001599	125 mm	6.3	30	37	97	14	20	60	140	50

L1 min.	L4 ±0,5	L11 –0,5	R4	SR	T ±0,2	TG
4.5	5.5	16.5	17	11	3	32,5 ±0,2
4.5	5.5	18	20	12	4	38 ±0,2
4.5	6.5	23	22	15	4	46,5 ±0,2
4.5	6.5	23	25	15	4	56,5 ±0,2
4.5	10	27	30	20	4	72 ±0,2
4.5	10	27	32	20	4	89 ±0,2
7	10	40	42	26	6	110 ±0,3

Clevis mounting MP2-HD, Series CM1

- Suitable for robust mechanical engineering applications
- Cylinder mounting in accordance with ISO 15552
- Suitable piston Ø 32 40 50 63 80 100 125 mm



Standards	ISO 15552

Technical data

Part No.	Piston Ø	Swivel bearing Ø
1827001289	32 mm	10 mm
1827001290	40 mm	12 mm
1827001291	50 mm	12 mm
1827001500	63 mm	16 mm
1827001293	80 mm	16 mm
1827001294	100 mm	20 mm
1827004862	125 mm	25 mm

Scope of delivery: clevis mounting incl. mounting screws

Technical information

Material	
Material	Aluminum (forged)
Screws	Steel
	galvanized

Dimensions

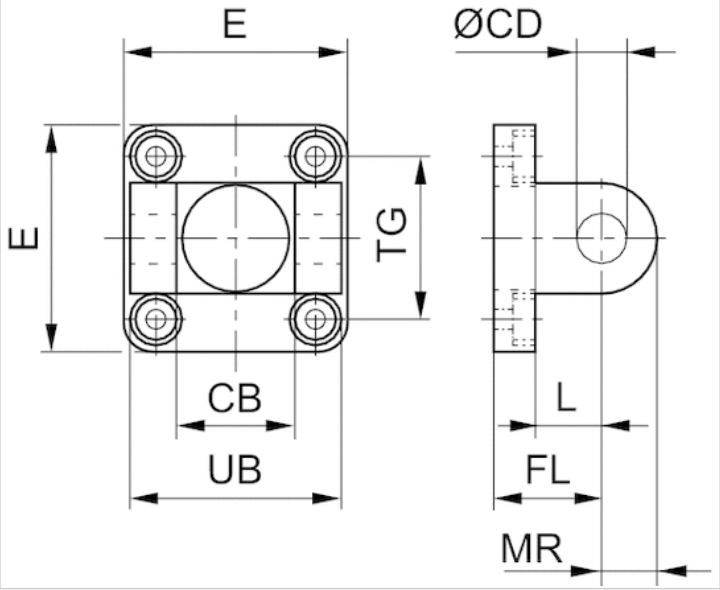

Dimensions

Part No.	Piston Ø	CB H14	Ø CD H9	E	FL ±0.2	L min.	MR max.	UB h13	TG
1827001289	32 mm	26	10	47.5	22	12	10	45	32.5 ±0.2
1827001290	40 mm	28	12	53.5	25	15	13	52	38 ±0.2
1827001291	50 mm	32	12	64	27	15	13	60	46.5 ±0.2
1827001500	63 mm	40	16	74	32	18	17	70	56.5 ±0.2
1827001293	80 mm	50	16	94	36	20	17	90	72.0 ±0.2
1827001294	100 mm	60	20	113.5	41	25	18	110	89.0 ±0.2
1827004862	125 mm	70	25	138	50	30	26	130	110 ±0.3

Rear eye MP4-HD, Series CM1

- Suitable for robust mechanical engineering applications, for clevis mounting MP2 and AB3
- Cylinder mounting in accordance with ISO 15552
- Suitable piston Ø 32 40 50 63 80 100 125 mm



Standards ISO 15552

Technical data

Part No.	Piston Ø	Swivel bearing Ø
1827001283	32 mm	10 mm
1827001284	40 mm	12 mm
1827001285	50 mm	12 mm
1827020086	63 mm	16 mm
1827001287	80 mm	16 mm
1827001288	100 mm	20 mm
1827004866	125 mm	25 mm

Scope of delivery: clevis incl. mounting screws

Technical information

Material	
Material	Aluminum (forged)
Screws	Steel
	galvanized

Dimensions

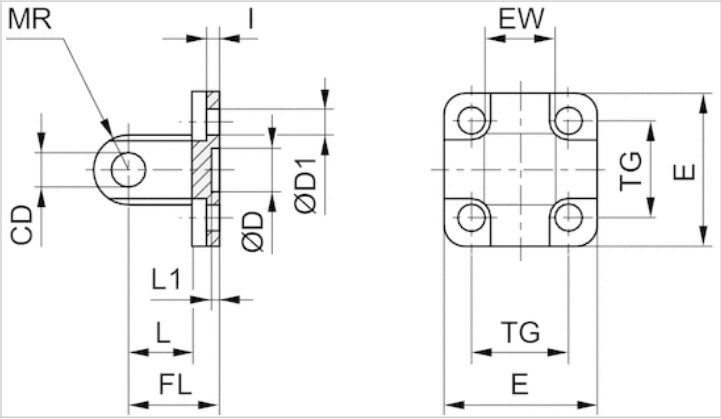

Dimensions

Part No.	Piston Ø	CD H9	Ø D	Ø D1	E	EW	FL ±0,2	I ±0,5	L min.	L1 min.
1827001283	32 mm	10	30 H11	6.6	48	26 –0,2/–0,6	22	5.5	12	4.5
1827001284	40 mm	12	35 H11	6.6	53	28 –0,2/–0,6	25	5.5	15	4.5
1827001285	50 mm	12	40 H11	9	63	32 –0,2/–0,6	27	6.5	15	4.5
1827020086	63 mm	16	45 H11	9	73	40 –0,2/–0,6	32	6.5	20	4.5
1827001287	80 mm	16	45 H11	11	98	50 –0,2/–0,6	36	10	20	4.5
1827001288	100 mm	20	55 H11	11	115	60 –0,2/–0,6	41	10	25	4.5
1827004866	125 mm	25	60 H11	14	140	70 –0,5/–1,2	50	10	30	7

MR max.	TG
10	32,5 ±0,2
12	38 ±0,2
12	46,5 ±0,2
16	56,5 ±0,2
16	72 ±0,2
20	89 ±0,2
26	110 ±0,3

Rear eye MP6, Series CM1

- With ball joint and foot
- Cylinder mounting in accordance with ISO 15552
- Suitable piston Ø 32 40 50 63 80 100 125 mm



Standards	ISO 15552
Weight	See table below

Technical data

Part No.	Piston Ø	Swivel bearing Ø	Bearing material, inner ring	Bearing material, outer ring	Weight
1827001619	32 mm	10 mm	Stainless steel	Brass with PTFE coating	0.1 kg
1827001620	40 mm	12 mm	Stainless steel	Brass with PTFE coating	0.1 kg
1827001621	50 mm	16 mm	Stainless steel	Brass with PTFE coating	0.2 kg
1827020087	63 mm	16 mm	Stainless steel	Brass with PTFE coating	0.3 kg
1827001623	80 mm	20 mm	Stainless steel	Brass with PTFE coating	0.6 kg
1827001624	100 mm	20 mm	Stainless steel	Brass with PTFE coating	0.8 kg
1827001625	125 mm	30 mm	Stainless steel	Brass with PTFE coating	1.4 kg

Scope of delivery: clevis incl. mounting screws

Technical information

Material	
Material	Aluminum (forged)
Screws	galvanized steel
Bearing	Stainless steel

Dimensions

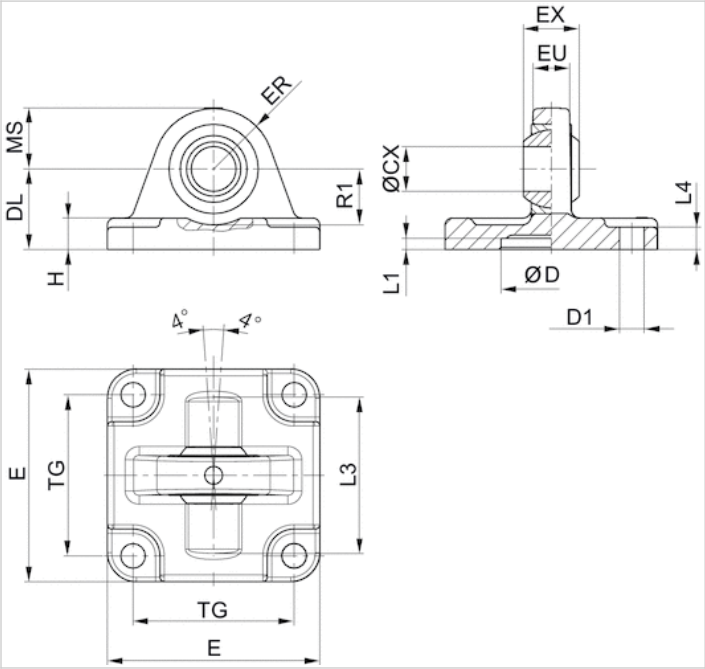

Dimensions

Part No.	Piston Ø	ØCX H7	ØD H11	ØD1 H13	DL ±0,2	E	EX –0,1	ER	EU	H	L1 min.
1827001619	32 mm	10	30	6.6	22	47	14	15	10.5	9	4.5
1827001620	40 mm	12	35	6.6	25	53	16	18	12	9	4.5
1827001621	50 mm	16	40	9	27	65	21	20	15	10.5	4.5
1827020087	63 mm	16	45	9	32	75	21	23	15	10.5	4.5
1827001623	80 mm	20	45	11	36	95	25	27	18	14	4.5
1827001624	100 mm	20	55	11	41	115	25	30	18	15	4.5
1827001625	125 mm	30	60	14	50	140	37	40	25	16	7

L3	L4	MS -0,5	R1 min.	TG
36	5.5	15	12	32,5 ±0,2
42	5.5	18	15	38 ±0,2
48	6.5	21	19	46,5 ±0,2
55	6.5	23	21	56,5 ±0,2
70	10	27	24	72 ±0,2
80	10	30	25	89 ±0,2
100	10	40	33	110 ±0,3

Rear eye MP9, Series CM1

- With rubber bushing
- Cylinder mounting in accordance with ISO 15552
- Suitable piston Ø 32 40 50 63 80 100 125 mm



Standards	ISO 15552
Weight	See table below

Technical data

Part No.	Piston Ø	Swivel bearing Ø	Bearing material	Weight	Fig.
3683203000	32 mm	10 mm	Bronze	0.092 kg	Fig. 2
3683204000	40 mm	12 mm	Bronze	0.143 kg	Fig. 1
3683205000	50 mm	12 mm	Bronze	0.217 kg	Fig. 2
3683206000	63 mm	16 mm	Bronze	0.411 kg	Fig. 1
3683208000	80 mm	16 mm	Bronze	0.64 kg	Fig. 2
3683210000	100 mm	20 mm	Bronze	0.956 kg	Fig. 1
R412015973	125 mm	25 mm	steel, galvanized	1.37 kg	Fig. 2

Scope of delivery: clevis incl. mounting screws

Technical information

Material	
Material	Aluminum (forged)
Bearing	Bronze steel, galvanized

Dimensions

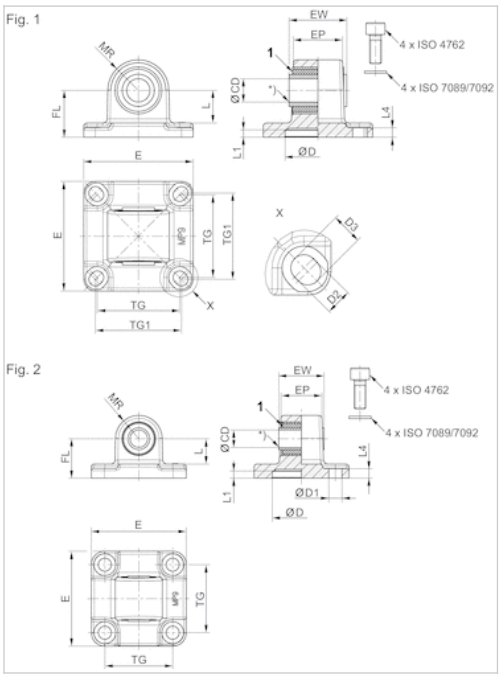

1) Rubber bushing

Dimensions

Part No.	Piston Ø	CD H11	CD H9	E	EW	EP	TG	TG1 ±0,2	FL ±0,2	L 1)	MR	L1	L4
3683203000	32 mm	10	-	46	25.5	18,9	32.5	–	22	13.8	12.5	5	5.5
3683204000	40 mm	-	12	53	27	23,5	38	40	25	16.3	15	5	5.5
3683205000	50 mm	-	12	65	31	28	46.5	–	27	17.3	16	5	6.5
3683206000	63 mm	-	16	75	39.5	33.5	56.5	59	32	22.3	21	5	6.5
3683208000	80 mm	-	16	94.5	49.5	43	72	–	36	21.8	22	5	10
3683210000	100 mm	-	20	114	59.5	54	89	90	41	25.8	25	5	10
R412015973	125 mm	-	25	138	69.5	60	110	–	50	33.8	34	7.5	10

D H11	D1 H13	D2 -0,2	D3 -0,2	Fig.
30	6.6	–	–	Fig. 2
35	–	6.6	8	Fig. 1
40	9	–	–	Fig. 2
45	6.6	–	–	Fig. 1
45	11	–	–	Fig. 2
55	–	11	11.7	Fig. 1
60	13.5	–	–	Fig. 2

Trunnion mounting MT4, Series CM1

- Suitable piston Ø 32 40 50 63 80 100 125 mm
- for series PRA



Technical data

Part No.	Piston Ø
1827003991	32 mm
1827003992	40 mm
1827003993	50 mm
1827003994	63 mm
1827003995	80 mm
1827003996	100 mm
1827003997	125 mm

Technical information

Material	
Material	Aluminum (forged)

Dimensions

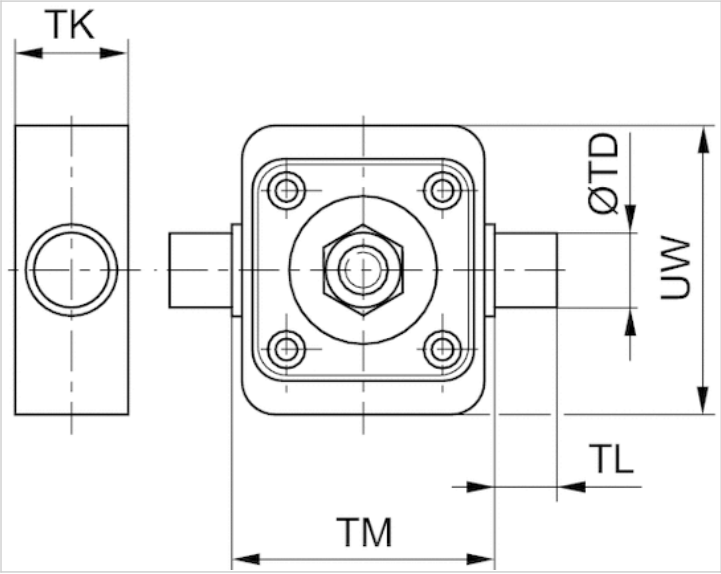

Dimensions

Part No.	Piston Ø	TD e9	TK 1)	TL h14	TM h14	UW
1827003991	32 mm	12	22	12	50	70
1827003992	40 mm	16	28	16	63	78
1827003993	50 mm	16	28	16	75	96
1827003994	63 mm	20	35	20	90	108
1827003995	80 mm	20	35	20	110	130
1827003996	100 mm	25	46	25	132	150
1827003997	125 mm	25	46	25	160	171

1) Max.

Trunnion mounting MT5, MT6, Series CM1

- for mounting to the cylinder cover or base
- Suitable piston Ø 32 40 50 63 80 100 125 mm
- for series CCI, CVI, CCL-IC/-IS, PRA/TRB CVI, CCL-IS, PRA, TRB



Weight

See table below

The delivered product may vary from that in the illustration.

Technical data

Part No.	Piston Ø	Weight
1827001609	32 mm	0.29 kg
1827001610	40 mm	0.5 kg
1827001611	50 mm	0.7 kg
1827002046	63 mm	1.1 kg
1827001613	80 mm	1.5 kg
1827001614	100 mm	2.7 kg
1827001615	125 mm	3.8 kg

Scope of delivery: trunnion mounting incl. mounting screws

Technical information

Material	
Material	Nodular graphite iron
	galvanized
Screws	Steel
	galvanized

Dimensions

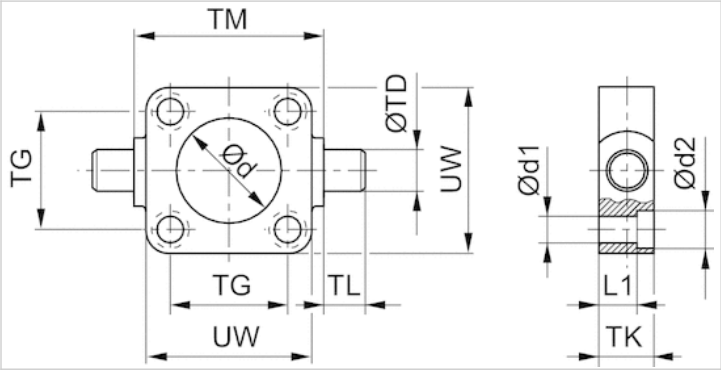

Dimensions

Part No.	Piston Ø	Ø d H11	Ø d1	Ø d2	L1	TD e9	TG ±0,2	TK	TL h14	TM h14	UW
1827001609	32 mm	30	6.6	11	7.5	12	32.5	16	12	50	48
1827001610	40 mm	35	6.6	11	7.5	16	38	20	16	63	56
1827001611	50 mm	40	9	15	10	16	46.5	24	16	75	65
1827002046	63 mm	45	9	15	10	20	56.5	24	20	90	75
1827001613	80 mm	45	11	18	16	20	72	28	20	110	100
1827001614	100 mm	55	11	18	25.5	25	89	38	25	132	120
1827001615	125 mm	60	14	20	34	25	110	46	25	160	145

Bearing, Series CM1

- for trunnion mounting
- Suitable piston Ø 32 40, 50 63, 80 mm



Technical data

Part No.	Piston Ø	Swivel bearing Ø	Scope of delivery
3671203000	32 mm	12 mm	2 piece
3671204000	40, 50 mm	16 mm	2 piece
3671206000	63, 80 mm	20 mm	2 piece

Technical information

Material	
Material	Aluminum

Dimensions

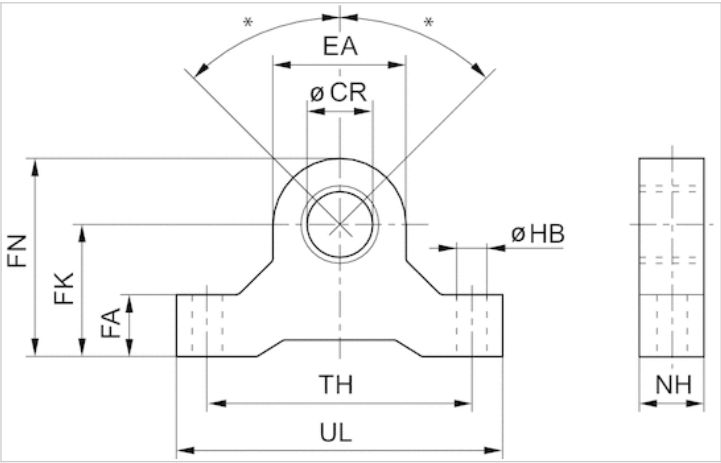

* Max. pendulum movement for cylinders with rear eye MP6 with ball joint: ±45°

Dimensions

Part No.	Ø CR H8	EA	FA	FK ±0,1	FN	HB	NH	TH	UL
3671203000	12	19	11	22	32	6.6	11	44	55
3671204000	16	28	16	35	49	9	16	65	82
3671206000	20	38	19	40	59	9	19	80	99

Bearing AT4, Series CM1

- for trunnion mounting MT4, MT5, MT6
- Cylinder mounting in accordance with ISO 15552
- Suitable piston Ø 20, 25, 32 40, 50 63, 80 100, 125 mm
- for series CCI, CCL-IC, ICL, KPZ, PRA/TRB CCI, CCL-IC, KPZ, PRA/TRB



Standards	ISO 15552

Technical data

Part No.	Piston Ø	Swivel bearing Ø	Scope of delivery
1827001603	20, 25, 32 mm	12 mm	2 piece
1827001604	40, 50 mm	16 mm	2 piece
1827001605	63, 80 mm	20 mm	2 piece
1827001606	100, 125 mm	25 mm	2 piece

Technical information

Material	
Material	Steel
	galvanized
Guide bushing	Sintered bronze

Dimensions

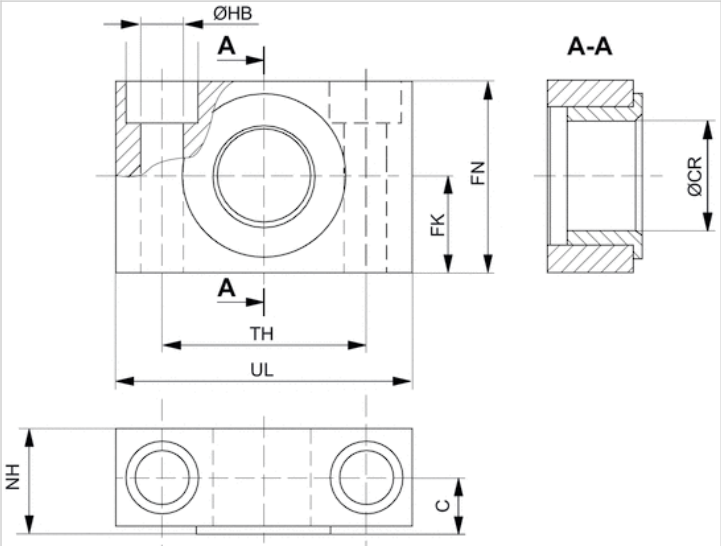

Dimensions

Part No.	Piston Ø	UL	NH	TH	C	CR H9	HB H13	FN	FK	Plain bearing
1827001603	20, 25, 32 mm	46	18	32 ±0,2	10.5	12	6.6	30	15 ±0,1	Sintered bronze
1827001604	40, 50 mm	55	21	36 ±0,2	12	16	9	36	18 ±0,1	Sintered bronze
1827001605	63, 80 mm	65	23	42 ±0,2	13	20	11	40	20 ±0,1	Sintered bronze
1827001606	100, 125 mm	75	28.5	50 ±0,2	16	25	14	50	25 ±0,1	Sintered bronze

Flange mounting MF1, MF2, Series CM1

- Cylinder mounting in accordance with ISO 15552
- Suitable piston Ø 32 40 50 63 80 100 125 mm



Standards ISO 15552

Technical data

Part No.	Piston Ø	Swivel bearing Ø
1827001277	32 mm	30 mm
1827001278	40 mm	35 mm
1827001279	50 mm	40 mm
1827001499	63 mm	45 mm
1827001281	80 mm	45 mm
1827001282	100 mm	55 mm
1827004861	125 mm	60 mm

Scope of delivery: flange mounting incl. mounting screws

Technical information

Material	
Material	Steel
	galvanized
Screws	Steel
	galvanized

Dimensions

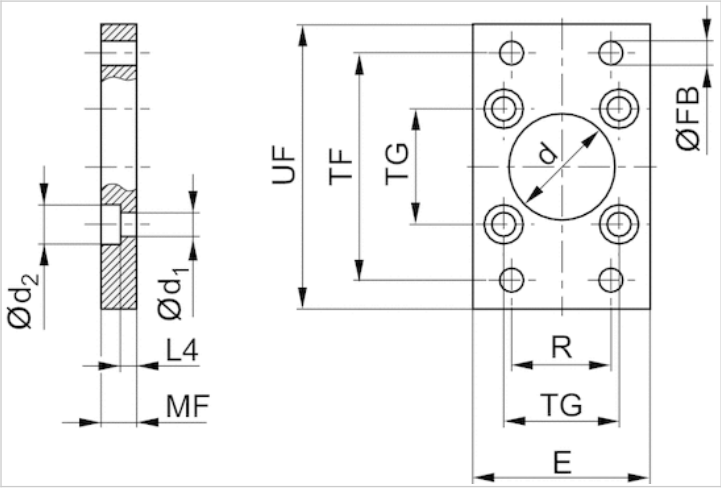

Dimensions

Part No.	Piston Ø	Ød H11	Ød1	Ød2	E max.	ØFB	L4	MF	R	TF	TG	UF
1827001277	32 mm	30	6.6	11	50	7	4.5	10	32	64	32,5 ±0,2	80
1827001278	40 mm	35	6.6	11	55	9	4.5	10	36	72	38 ±0,2	90
1827001279	50 mm	40	9	15	65	9	6	12	45	90	46,5 ±0,2	110
1827001499	63 mm	45	9	15	75	9	6	12	50	100	56,5 ±0,2	125
1827001281	80 mm	45	11	18	100	12	9	16	63	126	72 ±0,2	154
1827001282	100 mm	55	11	18	120	14	9	16	75	150	89 ±0,2	186
1827004861	125 mm	60	14	20	140	16	10.5	20	90	180	110 ±0,3	220

Intermediate flange JP1, Series CM1

- for multi-position cylinders
- Suitable piston Ø 32 40 50 63 80 100 125 mm



Technical data

Part No.	Piston Ø
1827020247	32 mm
1827020248	40 mm
1827020249	50 mm
1827020250	63 mm
1827020251	80 mm
1827020252	100 mm
1827020253	125 mm

Scope of delivery incl. mounting screws

Technical information

Material	
Material	Aluminum

Dimensions

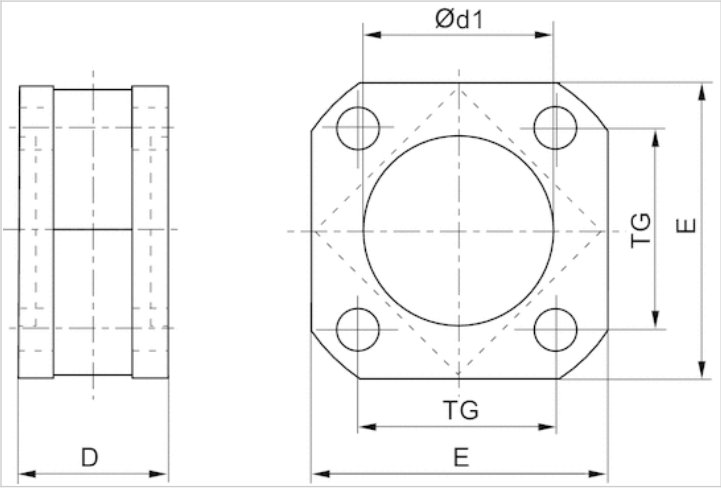

Dimensions

Part No.	Piston Ø	D	Ø d1 N7	E	TG
1827020247	32 mm	27	30	47	32.5
1827020248	40 mm	27	35	53	38
1827020249	50 mm	32	40	65	46.5
1827020250	63 mm	28	45	75	56.5
1827020251	80 mm	38	45	95	72
1827020252	100 mm	38	55	115	89
1827020253	125 mm	44	60	140	110

Foot mounting MS1, Series CM1

- to mount on cylinder PRA, TRB, CCL-IS/-IC, CCI, KPZ, 167, CVI, ITS
- Cylinder mounting in accordance with ISO 15552
- Suitable piston Ø 32 40 50 63 80 100 125 mm



Standards ISO 15552

Technical data

Part No.	Piston Ø	For series
1827001271	32 mm	PRA/TRB CCL-IC/-IS CCI CVI
1827001272	40 mm	PRA/TRB CCL-IC/-IS CCI CVI
1827001273	50 mm	PRA/TRB CCL-IC/-IS CCI CVI
1827001498	63 mm	PRA/TRB CCL-IC/-IS CCI CVI
1827001275	80 mm	PRA/TRB CCL-IC/-IS CCI CVI
1827001276	100 mm	CCI CCL-IC/-IS PRA/TRB CVI
1827001310	125 mm	PRA/TRB CCL-IS CVI

Scope of delivery: 2 foot mountings incl. mounting screws

Technical information

Material	
Material	Steel
	galvanized
Screws	Steel
	galvanized

Dimensions

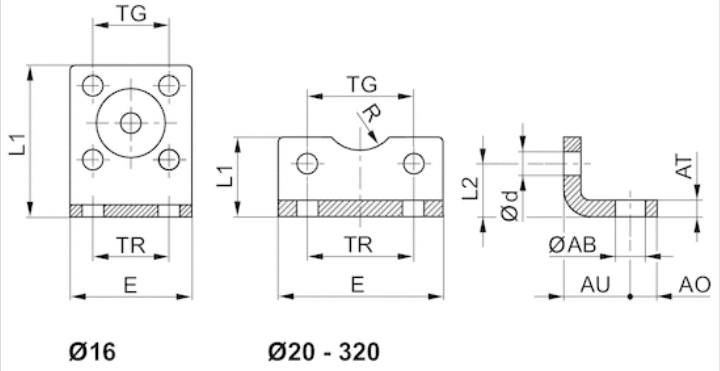

Dimensions

Part No.	Piston Ø	ØAB	AO	AT	AU ±0,2	Ød	E	L1	L2	R	TG	TR
1827001271	32 mm	7	8	4 ±0,3	24	6.6	48	25	15.5	15	32,5 ±0,2	32
1827001272	40 mm	10	10	4 ±0,3	28	6.6	56	26	17	17.5	38 ±0,2	36
1827001273	50 mm	10	11	5 ±0,3	32	9	68	32	21.5	20	46,5 ±0,2	45
1827001498	63 mm	10	13	5 ±0,3	32	9	78	34	21.5	22.5	56,5 ±0,2	50
1827001275	80 mm	12	16	6 ±0,5	41	11	98	47	27	22.5	72 ±0,2	63
1827001276	100 mm	14.5	19	6 ±0,5	41	11	117	52	26.5	27.5	89 ±0,2	75
1827001310	125 mm	16.5	20	8 ±1,0	45	13.5	144	69	35	30	110 ±0,3	90

Bolts AA4, Series CM1

- Cylinder mounting in accordance with ISO 15552
- Suitable piston Ø 32 40 50 63 80 100 125 mm



Standards	See table below
Weight	See table below

Technical data

Part No.	Piston Ø	Standardization	Weight	Fig.
1823120020	32 mm	-	0.03 kg	Fig. 1
1823120021	40 mm	-	0.05 kg	Fig. 1
1823120022	50 mm	-	0.06 kg	Fig. 1
1823120023	63 mm	-	0.12 kg	Fig. 1
1823120024	80 mm	-	0.15 kg	Fig. 1
1823120025	100 mm	-	0.29 kg	Fig. 1
5236000092	125 mm	ISO 15552	0.53 kg	Fig. 2

Scope of delivery: pivot pins incl. circlips

Technical information

Material	
Material	Steel
	galvanized

Dimensions

Fig. 1

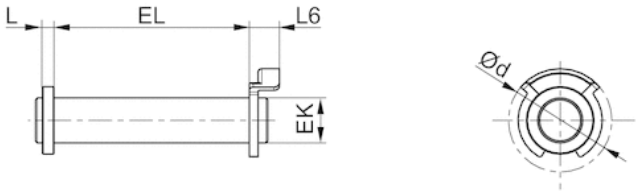

Fig. 2

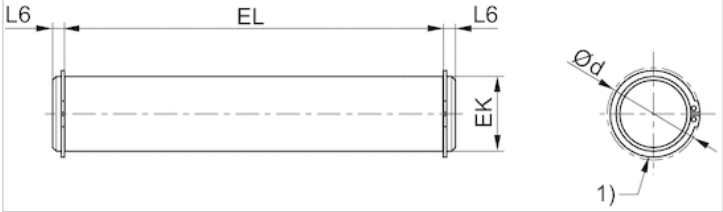

1) circlip DIN 471

Dimensions

Part No.	Piston Ø	Fig.	Ø d max.	EK e8	EL	L max.	L6 max.
1823120020	32 mm	Fig. 1	20	10	45.2 +0,3	3.5	9
1823120021	40 mm	Fig. 1	22	12	52.2 +0,3	4	9
1823120022	50 mm	Fig. 1	22	12	60.2 +0,3	4	9
1823120023	63 mm	Fig. 1	28	16	70.2 +0,3	4.5	11
1823120024	80 mm	Fig. 1	28	16	90.2 +0,3	4.5	11
1823120025	100 mm	Fig. 1	38	20	110.2 +0,3	5	11
5236000092	125 mm	Fig. 2	34.2	25	132 +0,5	-	3.75

Piston rod nut MR9



Weight See table below

Technical data

Part No.	Suitable piston rod thread	Weight
1823A00020	M10x1,25	0.01 kg
8103190344	M12x1,25	0.012 kg
1823300030	M16x1,5	0.017 kg
1823300031	M20x1,5	0.03 kg
1823A00029	M27x2	0.108 kg
8103190414	M36x2	0.175 kg
8103190424	M42x2	0.37 kg

Technical information

Material	
	Steel
	galvanized

Dimensions

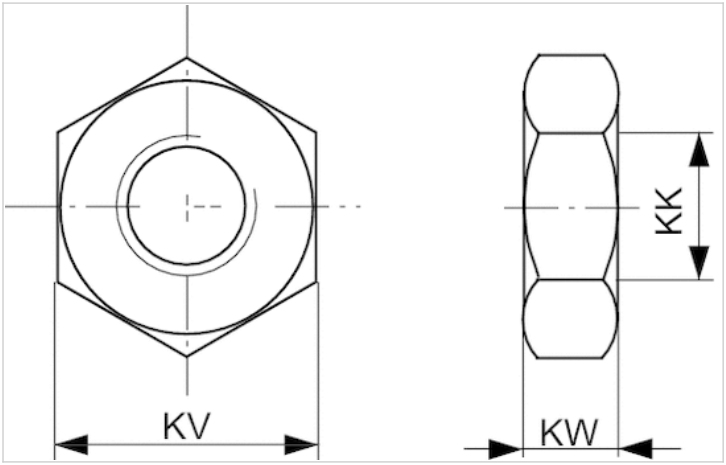

Dimensions

Part No.	KK	KV	KW
8103190344	M12x1,25	19	6
1823300030	M16x1,5	24	8
1823300031	M20x1,5	30	10
1823A00029	M27x2	41	13.5
8103190414	M36x2	50	16
8103190424	M42x2	60	21

Rod clevis AP2, Series CM2

- to mount on cylinder PRA, TRB, CCI, MNI, ICM, KPZ, KHZ, 167, CVI, RPC, RDC, ITS



Weight See table below

Technical data

Part No.	Suitable piston rod thread	for	Weight
1822122024	M10x1,25	PRA TRB CCI MNI ICM KPZ 167 CVI RPC RDC	0.1 kg
1822122025	M12x1,25	PRA TRB CCI KPZ 167 CVI RPC 102	0.16 kg
1822122005	M16x1,5	PRA TRB CCI KPZ 167 CVI RPC RDC 102	0.4 kg
1822122004	M20x1,5	PRA TRB KPZ 167 CVI 102	0.7 kg
1827001493	M27x2	PRA TRB CCL-IS 167 CVI	2 kg

Part No.	Fig.
1822122024	Fig. 1
1822122025	Fig. 1
1822122005	Fig. 1
1822122004	Fig. 1
1827001493	Fig. 2

Technical information

Material	
	Steel
	galvanized

Dimensions

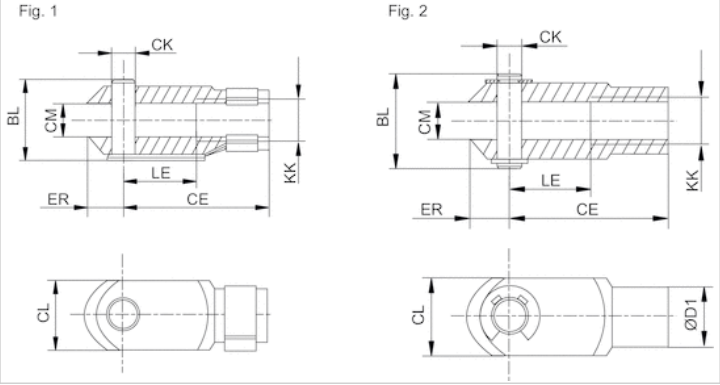

Dimensions

Part No.	KK	BL	CE	ØCK e11	CL	CM	ØD1	ER	LE	Fig.
1822122024	M10x1,25	26	40	10	20	10	18	12	20	Fig. 1
1822122025	M12x1,25	31	48	12	24	12	20	14	24	Fig. 1
1822122005	M16x1,5	39	64	16	32	16	26	19	32	Fig. 1
1822122004	M20x1,5	50	80	20	40	20	34	20	40	Fig. 1
1827001493	M27x2	68	110	30	55	30	48	38	54	Fig. 2

Rod clevis PM6, Series CM2

- for ball eye rod end AP6



Technical data

Part No.	for	Swivel bearing Ø
1822122032	AP6	14 mm
1822122033	AP6	16 mm
1822122034	AP6	21 mm
1822122035	AP6	25 mm
1822122036	AP6	30 mm

Scope of delivery incl. bolt

Technical information

Material	
	Steel
	galvanized

Dimensions

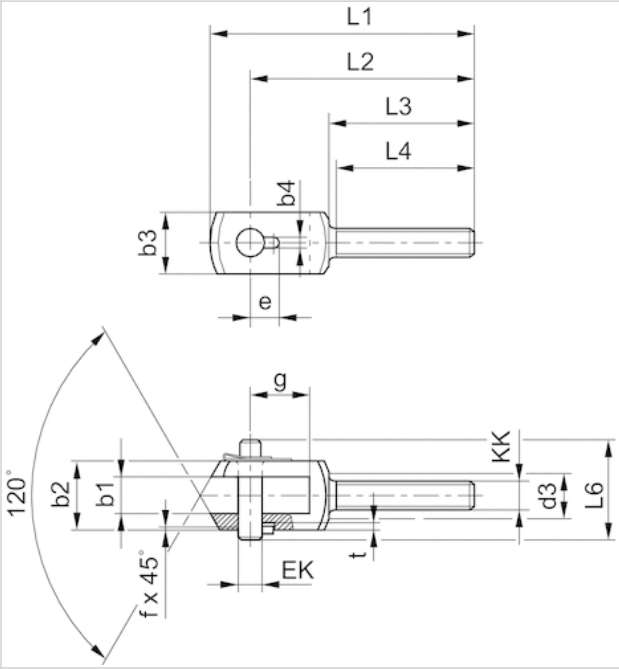

Dimensions

Part No.	b1 B12	b2 d12	b3	b4 +0,2	d3	e +0,3	EK	f	g	L1	L2	L3	L4 +1	L6	t +0,2
1822122032	14	28	20	3.3	17	11.5	10	0.7	20	90	78	53	50	35	3
1822122033	16	30	25	4.3	19	12	12	1	26	108	92	58	55	39	3
1822122034	21	40	35	4.3	24	14	16	1	31	129	108	65	62	50	3
1822122035	25	50	40	4.3	30	16	20	1	43	156	131	73	69	60	3
1822122036	37	67	60	6.3	38	24	30	1.5	54	200	168	98	92	77	5

Ball eye rod end AP6, series CM2

- with flange, to mount on cylinder PRA, TRB, CCI, SSI, MNI, RPC, KPZ, 167, CVI, RDC, 102, ITS



Weight See table below

Technical data

Part No.	Suitable piston rod thread	for	Swivel bearing Ø
1822124003	M10x1,25	PRA TRB MNI CCI SSI RPC KPZ 167 CVI RDC	254 mm
1822124004	M12x1,25	PRA TRB CCI SSI RPC KPZ 167 CVI 102	304.8 mm
1822124005	M16x1,5	PRA TRB CCI SSI RPC KPZ 167 CVI RDC 102	406.4 mm
1822124006	M20x1,5	PRA TRB KPZ 167 CVI 102	508 mm
1822124013	M27x2	PRA TRB 167 CVI	762 mm

Part No.	Weight
1822124003	0.07 kg
1822124004	0.12 kg
1822124005	0.21 kg
1822124006	0.38 kg
1822124013	1.17 kg

Technical information

Material	
	Steel
	galvanized

Dimensions

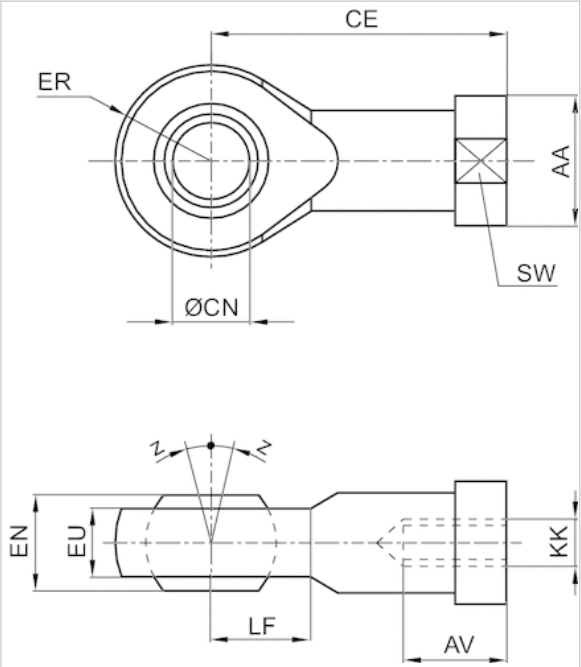

Dimensions

Part No.	KK	AA	AV min.	CE	Ø CN H7	EN –0,1	ER	EU max.	LF	SW	Z [°] max.
1822124003	M10x1,25	19	15	43	10	14	14	11.5	14	17	4
1822124004	M12x1,25	22	18	50	12	16	16	12.5	16	19	4
1822124005	M16x1,5	27	24	64	16	21	21	15.5	21	22	4
1822124006	M20x1,5	34	30	77	20	25	25	18.5	25	30	4
1822124013	M27x2	50	45	110	30	37	35	27	35	41	4

Compensating coupling PM5, series CM2

- to mount on cylinder PRA, TRB, CCL-IS/-IC, CCI, SSI, MNI, KPZ, KHZ, 167, CVI, RPC, RDC, ITS, spherical



Weight See table below

Technical data

Part No.	Suitable piston rod thread	for
R412026142	M10x1,25	PRA TRB CCL-IS CCL-IC CCI SSI KPZ 167 CVI RPC
R412026143	M12x1,25	PRA TRB CCI CCL-IS CCL-IC SSI KPZ 167 CVI RPC
R412026144	M16x1,5	PRA TRB CCI CCL-IS CCL-IC KPZ 167 CVI RPC RDC
R412026145	M20x1,5	PRA TRB CCL-IS SSI KPZ 167 CVI
1826409006	M27x2	PRA TRB CCL-IS CVI

Part No.	Weight
R412026142	0.21 kg
R412026143	0.21 kg
R412026144	0.65 kg
R412026145	0.68 kg
1826409006	1.7 kg

Technical information

Material	
	Steel
	galvanized

Dimensions

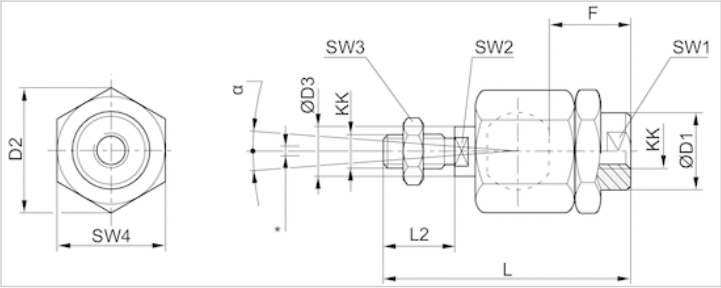

* Radial joint

Dimensions

Part No.	KK	Ø D1	D2	Ø D3	F	L ±2	L2	SW1	SW2	SW3	SW4	α [°]	1)	2)
R412026142	M10x1,25	22	32	14	23	74.5	23	19	12	17	30	8	0.05-0.5	0-2
R412026143	M12x1,25	22	32	14	24	75	24	19	12	19	30	7	0.05-0.5	0-2
R412026144	M16x1,5	32	45	22	30	103	30	30	20	24	41	6	0.05-0.5	0-2
R412026145	M20x1,5	32	45	22	40	119	40	30	20	30	41	6	0.05-0.5	0-2
1826409006	M27x2	62	62	28	48	147	54	32	24	41	55	8	0.05-0.2	0-2

1) Axial play

2) Radial play

Compensating coupling PM7, series CM2

- to mount on cylinder PRA, TRB, CCL-IS/-IC, CCI, SSI, KPZ, 167, CVI, RPC, ITS, with plate



Weight See table below

Technical data

Part No.	Suitable piston rod thread	for	Weight
1827001629	M10x1,25	PRA TRB CCL-IS CCL-IC CCI SSI KPZ RPC 167	0.3 kg
1827001630	M12x1,25	PRA TRB CCL-IS CCL-IC CCI SSI KPZ RPC 167	0.4 kg
1827001631	M16x1,5	PRA TRB CCL-IS CCL-IC CCI SSI KPZ RPC 167	0.9 kg
1827001632	M20x1,5	PRA TRB CCL-IS SSI KPZ CVI 167	1.15 kg
1827001633	M27x2	PRA TRB CCL-IS CVI	1.1 kg
1827001634	M36x2	ITS	3.4 kg

Technical information

Material	
	Steel
	galvanized

Dimensions

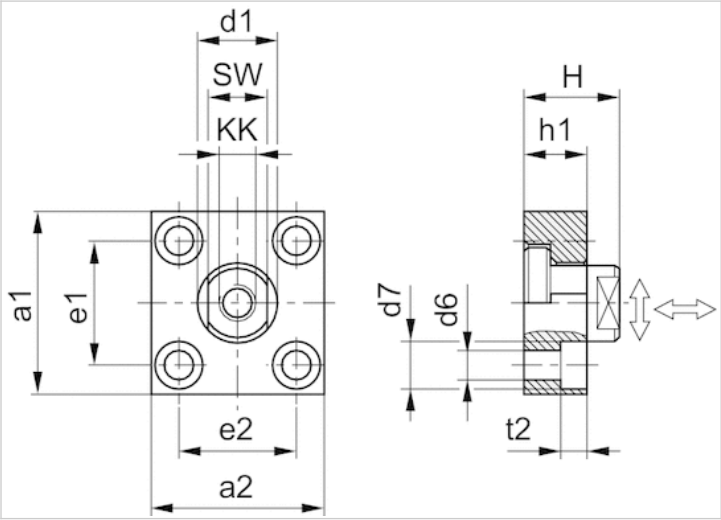

Dimensions

Part No.	a1	a2	d1 h11	d6 H13	d7 H13	e1 H13	e2	h1	t2	H	SW
1827001629	60	37	20	6.6	11	36 ±0,15	23 ±0,15	15	7	24	17
1827001630	60	56	25	9	15	42 ±0,2	38 ±0,2	20	9	30	19
1827001631	80	80	30	11	18	58 ±0,2	58 ±0,2	20	11	32	24
1827001632	90	90	40	14	20	65 ±0,3	65 ±0,3	20	13	35	36
1827001633	90	90	40	14	20	65 ±0,3	65 ±0,3	20	13	35	36
1827001634	125	125	60	18	26	90 ±0,3	90 ±0,3	30	17	55	50

Tightening torque for the coupling pin Ma ± 5%	Axial play min./max.	Radial play min./max.
17 Nm	0.4 0.8 mm	1.9 2.3 mm
29 Nm	0.4 0.8 mm	1.9 2.3 mm
71 Nm	0.4 0.8 mm	1.9 2.3 mm
138 Nm	0.4 0.8 mm	1.9 2.3 mm
350 Nm	0.4 20.31 mm	1.9 2.3 mm
1080 Nm	0.4 0.95 mm	2.8 3.4 mm

Guide unit GU1, Series CG1

- Ø 32-100 mm
- Plain bearing
- For standard cylinders ISO 15552



Bearing type	Plain bearing
Ambient temperature min./max.	-20 ... 80 °C

Technical data

Suitable piston Ø	32 mm	40 mm	50 mm	63 mm	80 mm	100 mm
Stroke 50	0821401010	0821401020	0821401030	0821401480	0821401050	0821401060
100	0821401011	0821401021	0821401031	0821401481	0821401051	0821401061
160	0821401012	0821401022	0821401032	0821401482	0821401052	0821401062
200	0821401013	0821401023	0821401033	0821401483	0821401053	0821401063
250	0821401014	0821401024	0821401034	0821401484	0821401054	0821401064
320	0821401015	0821401025	0821401035	0821401485	0821401055	0821401065
400	0821401016	0821401026	0821401036	0821401486	0821401056	0821401066
500	0821401017	0821401027	0821401037	0821401487	0821401057	0821401067
600	0821401018	0821401028	0821401038	0821401488	0821401058	0821401068
800	0821401019	0821401029	0821401039	0821401489	0821401059	0821401069
1000	0821401500	0821401502	0821401504	0821401490	0821401508	0821401510
1200	0821401501	0821401503	0821401505	0821401491	0821401509	0821401511

For use with hybrid inch cylinders with metric piston rod thread

Technical data

Suitable piston Ø	32 mm	40 mm	50 mm	63 mm	80 mm	100 mm
Weight 0 mm stroke	0.63 kg	0.946 kg	1.36 kg	1.66 kg	3.45 kg	4.69 kg
+10 mm stroke	0.012 kg	0.018 kg	0.018 kg	0.018 kg	0.022 kg	0.022 kg

Technical information

Material	
Bearing housings	Aluminum, colorless anodized
Bearing type	Sintered bronze
Carrying plate	Aluminum, colorless anodized

Material	
Flexible coupling in carrying plate	Stainless steel
Guide rods	Hardened heat-treated steel, ground

Dimensions

Ø 32 ... 100 mm

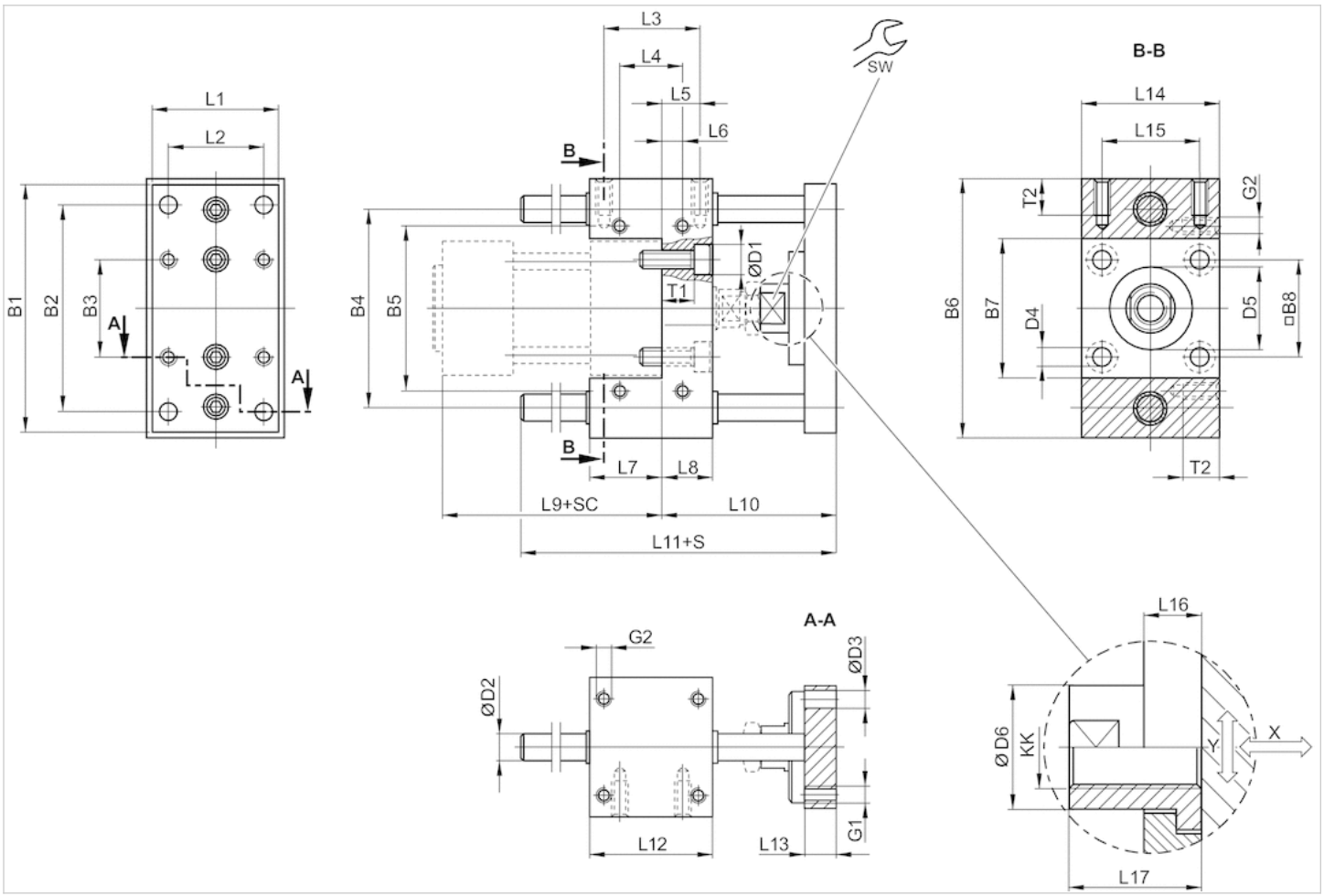

S = stroke
SC = cylinder stroke
X = max. play (axial)
Y = min. play (radial)

Dimensions

Piston Ø	B1	B2	B3	B4	B5	B6	B7	B8	D1	D2	D3	D4	D5	D6	G1	G2	KK	L1
32 mm	90	78	32.5	74	58	100	48	32.5	11	10	6.6	6.6	30 M8	18	M6	M6	M10x1,25	45
40 mm	100	84	38	80	64	106	54	38	11	12	6.6	6.6	35 M8	18	M6	M6	M12x1,25	50
50 mm	120	100	46.5	96	80	125	66	46.5	15	12	9	9	40 M8	24	M8	M8	M16x1,5	60
63 mm	125	105	56.5	104	95	132	76	56.5	15	12	9	9	45 M8	24	M8	M8	M16x1,5	70
80 mm	155	130	72	130	130	165	98	72	18	16	11	11	45 M8	30	M10	M10	M20x1,5	90
100 mm	175	150	89	150	150	185	118	89	18	16	11	11	55 M8	30	M10	M10	M20x1,5	110

Piston Ø	L2	L3	L4	L5	L6	L7	L8	L9	L10	L11	L12	L13	L14	L15	L16	L17	SW	T1	T2
32 mm	32.5	32.5	32.5	9.25	9.25	31	17	94	69	106	48	12	48	32.5	14	22	15	10	14
40 mm	38	38	38	11	11	37	21	105	74	117	58	12	56	38	14	22	15	14	14
50 mm	46.5	46.5	46.5	18.75	18.75	34	25	106	89	129	59	15	66	46.5	14	26	22	16	16
63 mm	56.5	56.5	56.5	15.25	15.25	51	25	121	89	146	76	15	76	56.5	14	26	22	16	16
80 mm	72	72	50	25	14	56	34	128	106	170	90	16	98	72	14	32	27	24	20
100 mm	89	89	70	28.5	19	71	39	138	111	190	110	16	118	89	14	32	27	29	20

Diagrams

Useful load

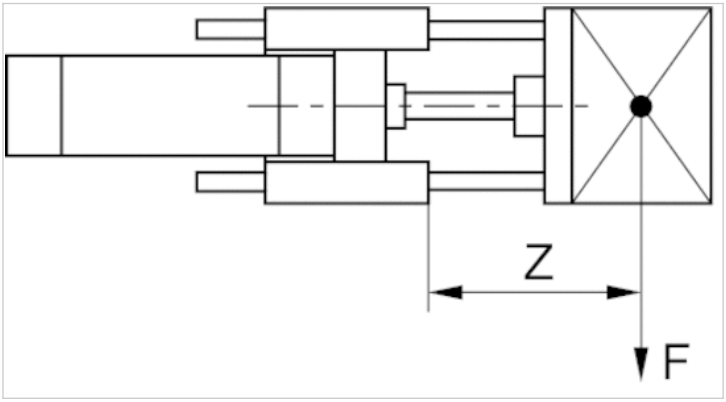

F = Useful load, Z = Projection

Useful load

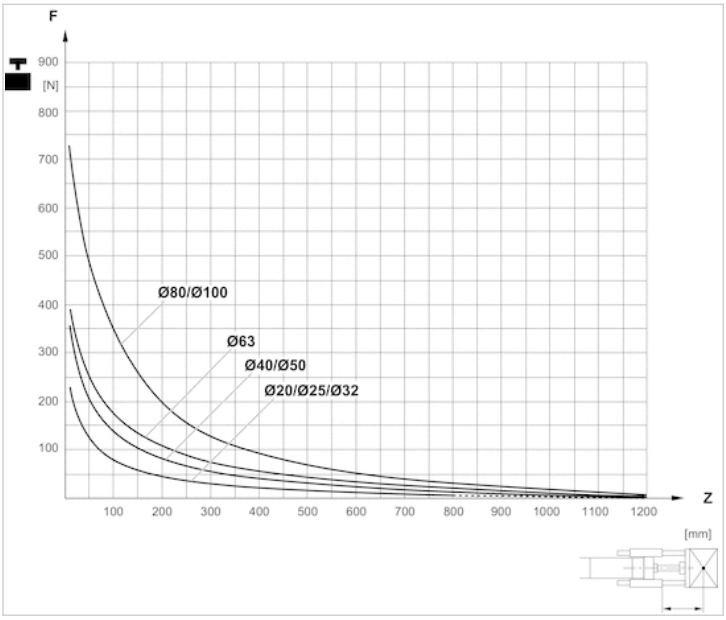

F = Useful load, Z = Projection

Guide unit GH1, Series CG1

- Ø 32-100 mm
- Plain bearing
- For standard cylinders ISO 15552



Bearing type	Plain bearing
Ambient temperature min./max.	-20 ... 80 °C

Technical data

Suitable piston Ø	32 mm	40 mm	50 mm	63 mm	80 mm	100 mm
Stroke 50	0821401220	0821401230	0821401240	0821401280	-	-
100	0821401221	0821401231	0821401241	0821401281	0821401260	0821401270
160	0821401222	0821401232	0821401242	0821401285	-	-
200	0821401223	0821401233	0821401243	0821401282	0821401261	0821401271
250	0821401224	0821401234	0821401244	0821401286	-	-
320	0821401225	0821401235	0821401245	0821401283	0821401262	0821401272
400	0821401226	0821401236	0821401246	0821401287	-	-
500	0821401227	0821401237	0821401247	0821401284	0821401263	0821401273
600	0821401228	0821401238	0821401249	0821401288	0821401264	0821401274
800	0821401229	0821401239	0821401474	0821401289	0821401265	0821401275
1000	0821401470	0821401472	0821401475	0821401290	0821401266	0821401276
1200	0821401471	0821401473	0821401476	0821401291	0821401267	0821401277

Inch dimensions rounded to the nearest whole number., For use with hybrid inch cylinders with metric piston rod thread

Technical data

Suitable piston Ø	32 mm	40 mm	50 mm	63 mm	80 mm	100 mm
Weight 0 mm stroke	1.3 kg	2.3 kg	3.7 kg	4.7 kg	8.8 kg	11.1 kg
+10 mm stroke	0.009 kg	0.016 kg	0.025 kg	0.025 kg	0.039 kg	0.039 kg

Technical information

Material	
Bearing housings	Aluminum, colorless anodized
Bearing type	Sintered bronze
Carrying plate	Aluminum, colorless anodized

Material	
Flexible coupling in carrying plate	Stainless steel
Guide rods	Hardened heat-treated steel, ground

Dimensions

Ø 32 ... 100 mm

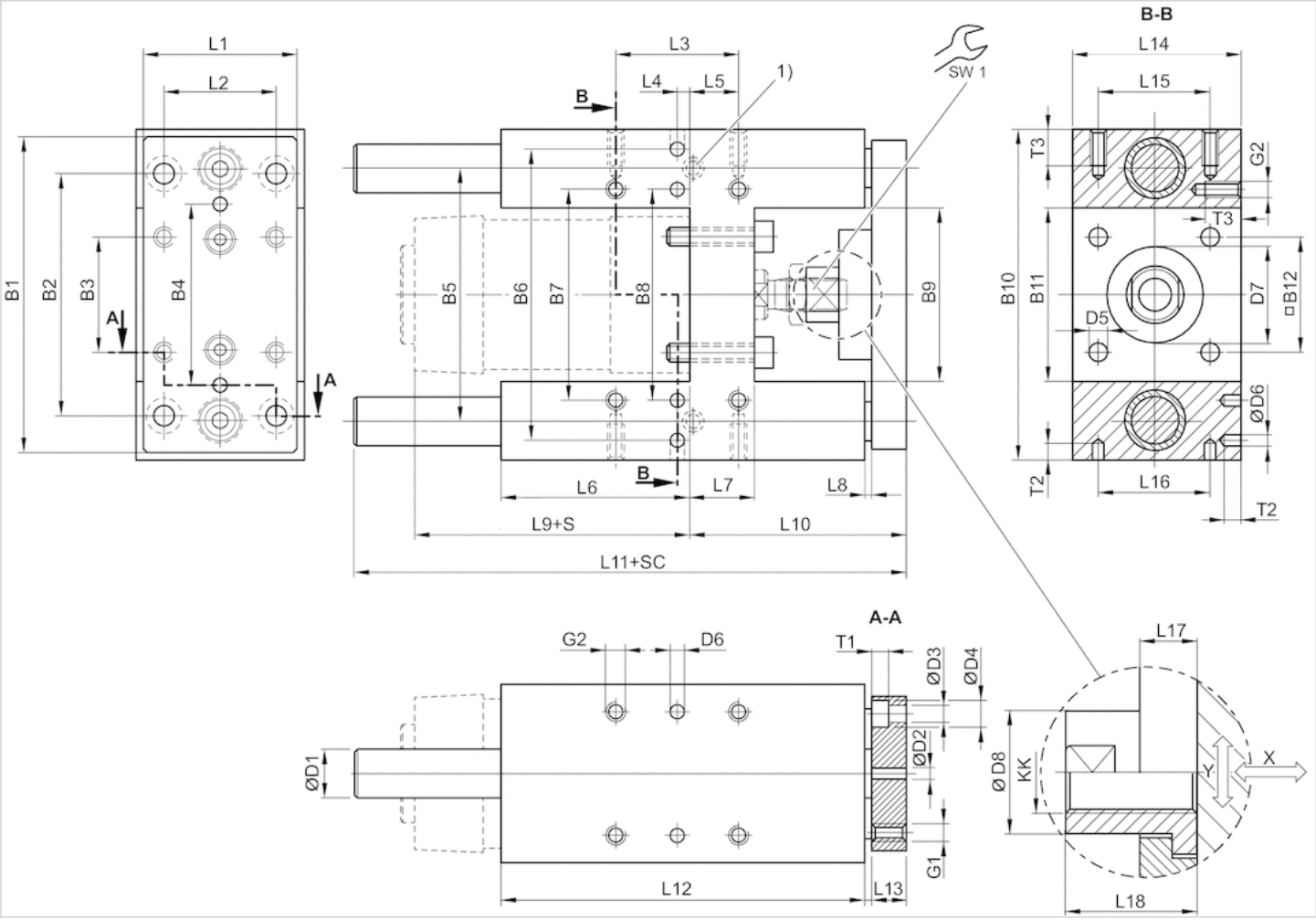

1) Lube nipple
S = stroke
SC = cylinder stroke
X = max. play (axial)
Y = min. play (radial)

Dimensions

Piston Ø	B1	B2	B3	B4	B5	B6	B7	B8	B9	B10	B11	B12	D1	D2 H7	D3	D4	D5	D6 H7
32 mm	90	78	32.5	50	74	81	61	61	50.2	97	50.2	32.5	12	6	6.6	11	6.6	6
40 mm	110	84	38	54	87	99	69	69	58.2	115	58.2	38	16	6	6.6	11	6.6	6
50 mm	130	100	46.5	72	104	119	85	85	70.2	137	70.2	46.5	20	6	9	15	9	6
63 mm	145	105	56.5	82	119	132	100	100	85.2	152	85.2	56.5	20	6	9	15	9	6
80 mm	180	130	72	106	148	166	130	130	105.4	189	105.4	72	25	6	11	18	11	6
100 mm	200	150	89	131	172	190	150	150	130.4	213	130.4	89	25	6	11	18	11	6

Piston Ø	D7 M8	D8	G1	G2	KK	L1	L2	L3	L4	L5	L6	L7	L8	L9	L10	L11	L12
32 mm	30	14.5	M6	M6	M10x1,25	45	32.5	32.5	12	4.25	76	17	3	94	64	177.5	125
40 mm	35	18	M6	M6	M12x1,25	54	38	38	8	11	81	21	3	105	74	192.5	140
50 mm	40	24	M8	M8	M16x1,5	63	46.5	46.5	4.5	18.75	79	26	3	106	89	205	150
63 mm	45	24	M8	M8	M16x1,5	80	56.5	56.5	13	15.25	111	26	3	121	89	237	182
80 mm	45	30	M10	M10	M20x1,5	100	72	72	15	21	128	34	3	128	110	280	215
100 mm	55	30	M10	M10	M20x1,5	120	89	89	20	24.5	128	39	3	138	115	280	220

Piston Ø	L13	L14	L15	L16	L17	L18	T1	T2	T3	SW1
32 mm	12	50	32.5	32.5	6	17	6.5	10	15	13
40 mm	12	58	38	38	14	22	6.5	10	15	15
50 mm	15	70	46.5	46.5	14	26	9	10	16	22
63 mm	15	85	56.5	56.5	14	26	9	10	16	22
80 mm	20	105	72	72	14	32	11	10	20	27
100 mm	20	130	89	89	14	32	11	10	20	27

Diagrams

Useful load

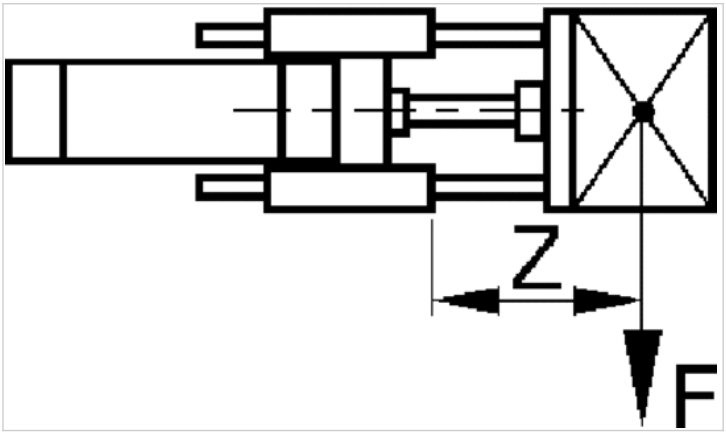

F = Useful load, Z = Projection

Useful load

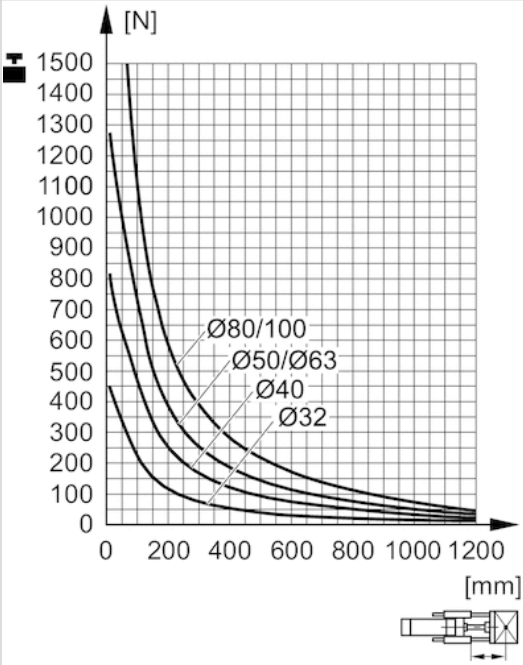

F = Useful load, Z = Projection

Bending due to own load

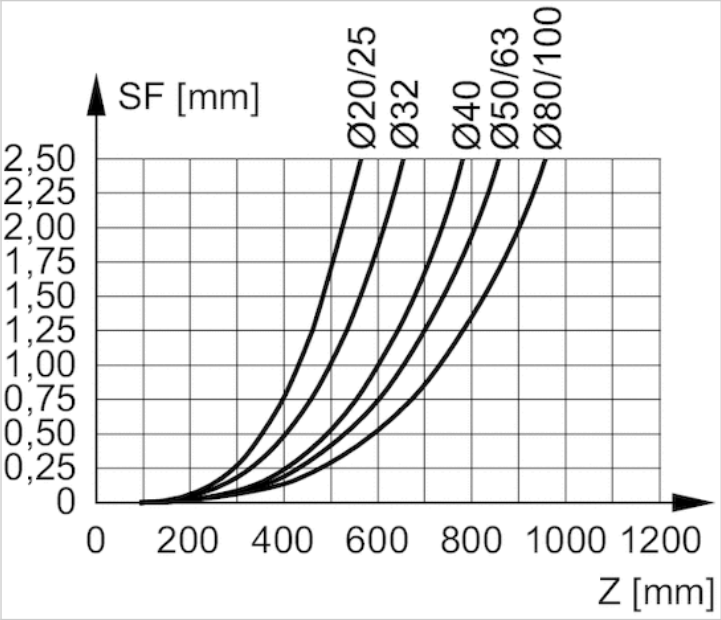

F = useful load (at the load center), SF = bending, Z = projection

Bending due to 10 N load

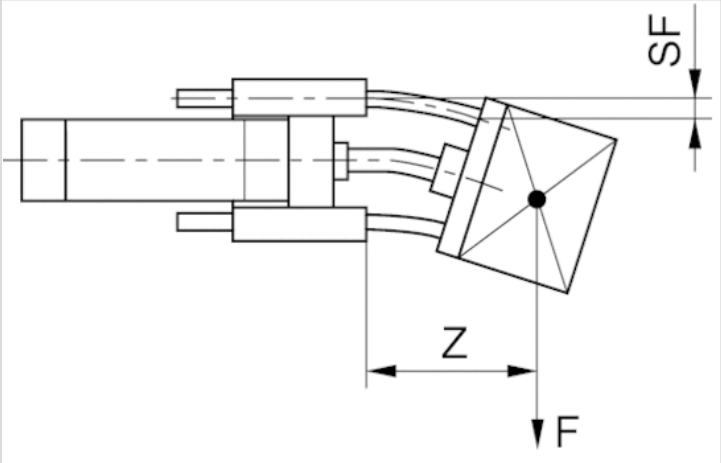

F = useful load (at the load center), SF = bending, Z = projection

Bending due to 10 N load

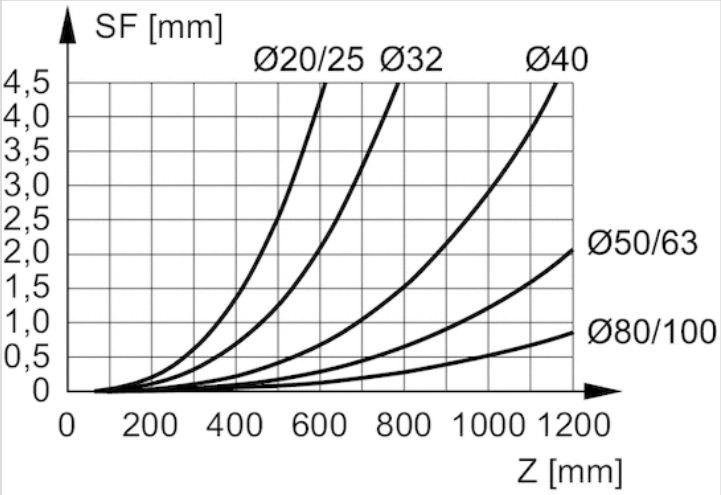

F = useful load (at the load center), SF = bending, Z = projection

Guide unit GH2, Series CG1

- Ø 32-100 mm
- Linear ball bearing
- For standard cylinders ISO 15552



Bearing type	Linear ball bearing
Ambient temperature min./max.	-20 ... 80 °C

Technical data

Suitable piston Ø	32 mm	40 mm	50 mm	63 mm	80 mm	100 mm
Stroke 50	0821401320	0821401330	0821401340	0821401380	-	-
100	0821401321	0821401331	0821401341	0821401381	0821401360	0821401370
200	0821401322	0821401332	0821401342	0821401382	0821401361	0821401371
320	0821401323	0821401333	0821401343	0821401383	0821401362	0821401372
500	0821401324	0821401334	0821401344	0821401384	0821401363	0821401373
600	0821401325	0821401335	0821401345	0821401385	0821401364	0821401374
800	0821401326	0821401336	0821401346	0821401386	0821401365	0821401375
1000	0821401327	0821401337	0821401347	0821401387	0821401366	0821401376
1200	0821401328	0821401338	0821401348	0821401388	0821401367	0821401377

For use with hybrid inch cylinders with metric piston rod thread

Technical data

Suitable piston Ø	32 mm	40 mm	50 mm	63 mm	80 mm	100 mm
Weight 0 mm stroke	1.3 kg	2.3 kg	3.7 kg	4.7 kg	8.8 kg	11.1 kg
+10 mm stroke	0.009 kg	0.016 kg	0.025 kg	0.025 kg	0.039 kg	0.039 kg

Technical information

Material	
Bearing housings	Aluminum, colorless anodized
Bearing type	Steel
Carrying plate	Aluminum, colorless anodized
Flexible coupling in carrying plate	Stainless steel
Guide rods	Hardened heat-treated steel

Dimensions

Ø 32 ... 100 mm

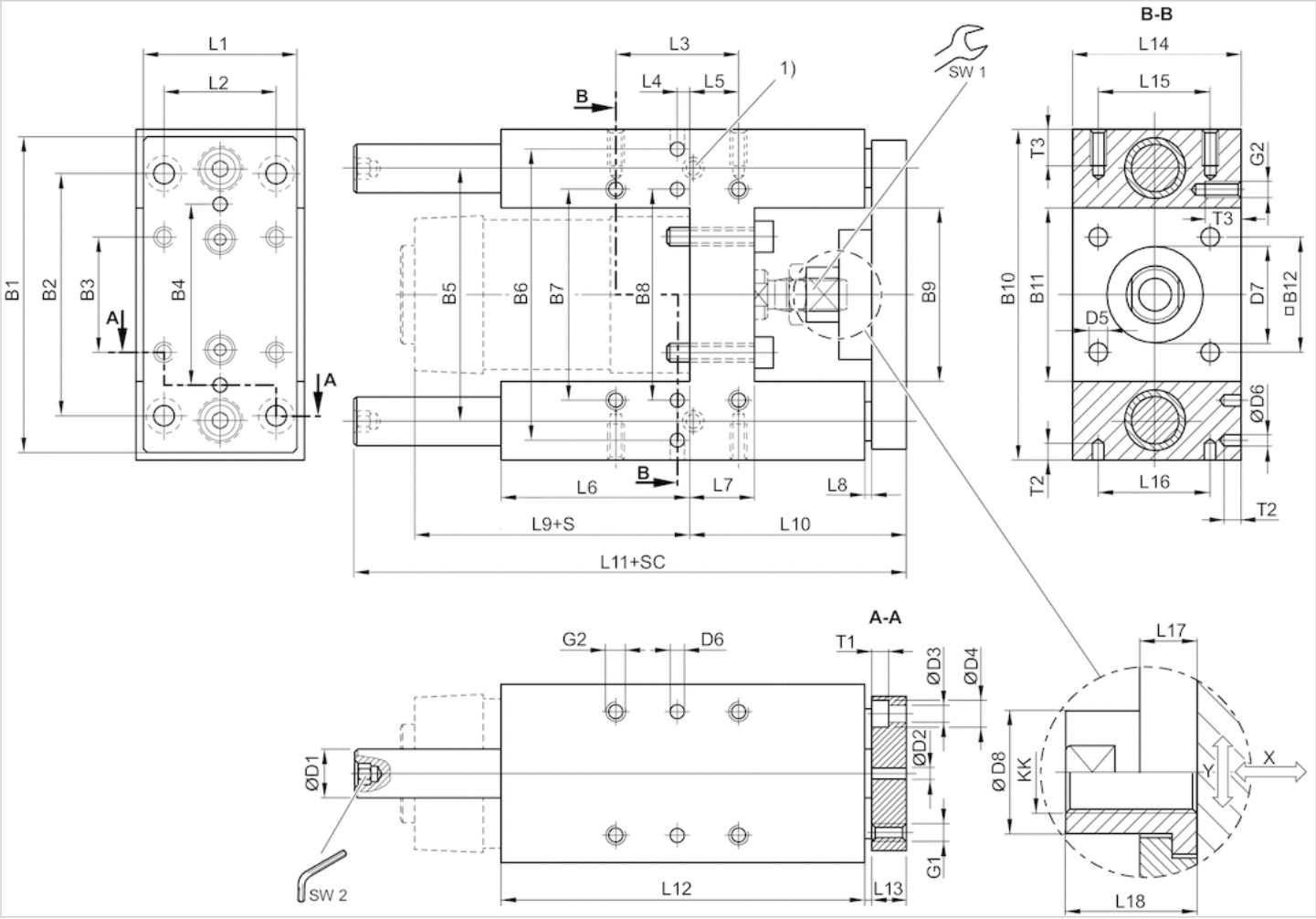

1) Lube nipple
S = stroke
SC = cylinder stroke
X = max. play (axial)
Y = min. play (radial)
Hexagon in guide rod

Dimensions

Piston Ø	B1	B2	B3	B4	B5	B6	B7	B8	B9	B10	B11	B12	D1	D2 H7	D3	D4	D5	D6 H7
32 mm	90	78	32.5	50	74	81	61	61	50.2	97	50.2	32.5	12	6	6.6	11	6.6	6
40 mm	110	84	38	54	87	99	69	69	58.2	115	58.2	38	16	6	6.6	11	6.6	6
50 mm	130	100	46.5	72	104	119	85	85	70.2	137	70.2	46.5	20	6	9	15	9	6
63 mm	145	105	56.5	82	119	132	100	100	85.2	152	85.2	56.5	20	6	9	15	9	6
80 mm	180	130	72	106	148	166	130	130	105.4	189	105.4	72	25	6	11	18	11	6
100 mm	200	150	89	131	172	190	150	150	130.4	213	130.4	89	25	6	11	18	11	6

Piston Ø	D7 M8	D8	G1	G2	KK	L1	L2	L3	L4	L5	L6	L7	L8	L9	L10	L11	L12
32 mm	30	14.5	M6	M6	M10x1,25	45	32.5	32.5	12	4.25	76	17	3	94	64	177.5	125
40 mm	35	18	M6	M6	M12x1,25	54	38	38	8	11	81	21	3	105	74	192.5	140

Piston Ø	D7 M8	D8	G1	G2	KK	L1	L2	L3	L4	L5	L6	L7	L8	L9	L10	L11	L12
50 mm	40	24	M8	M8	M16x1,5	63	46.5	46.5	4.5	18.75	79	26	3	106	89	237	150
63 mm	45	24	M8	M8	M16x1,5	80	56.5	56.5	13	15.25	111	26	3	121	89	237	182
80 mm	45	30	M10	M10	M20x1,5	100	72	72	15	21	128	34	3	128	110	280	215
100 mm	55	30	M10	M10	M20x1,5	120	89	89	20	24.5	128	39	3	138	115	280	220

Piston Ø	L13	L14	L15	L16	L17	L18	T1	T2	T3	SW1	SW2
32 mm	12	50	32.5	32.5	6	17	6.5	10	15	13	5
40 mm	12	58	38	38	14	22	6.5	10	15	15	6
50 mm	15	70	46.5	46.5	14	26	9	10	16	22	6
63 mm	15	85	56.5	56.5	14	26	9	10	16	22	6
80 mm	20	105	72	72	14	32	11	10	20	27	8
100 mm	20	130	89	89	14	32	11	10	20	27	8

Diagrams

Useful load

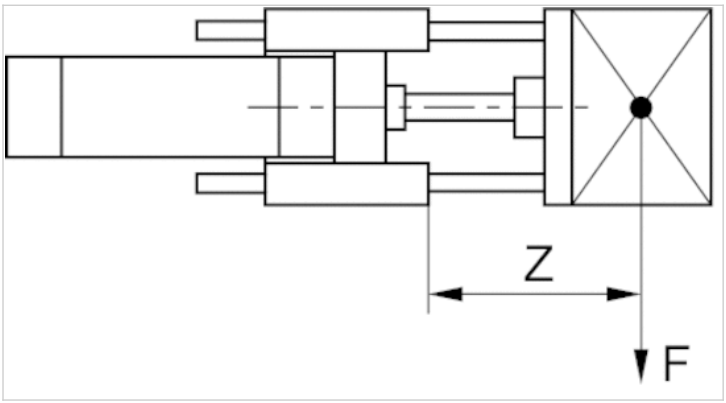

F = Useful load, Z = Projection

Useful load

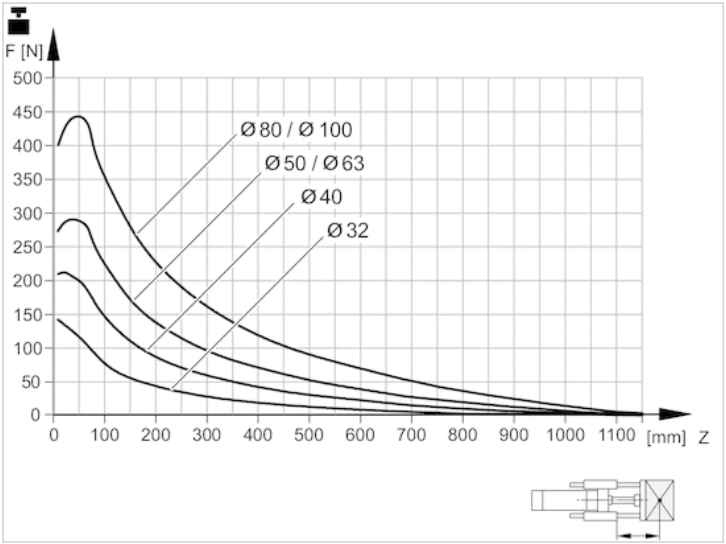

Service life 2x10⁶ m
F = Useful load, Z = Projection

Useful load

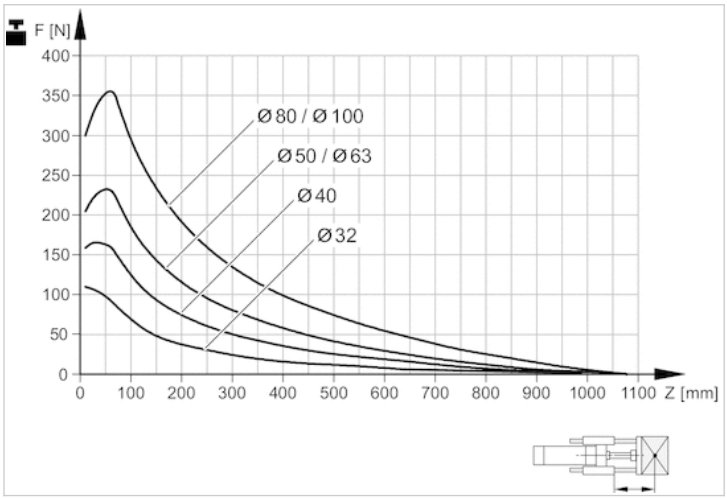

Service life 5x10⁶ m
F = Useful load, Z = Projection

Reduction of useful load for short-stroke

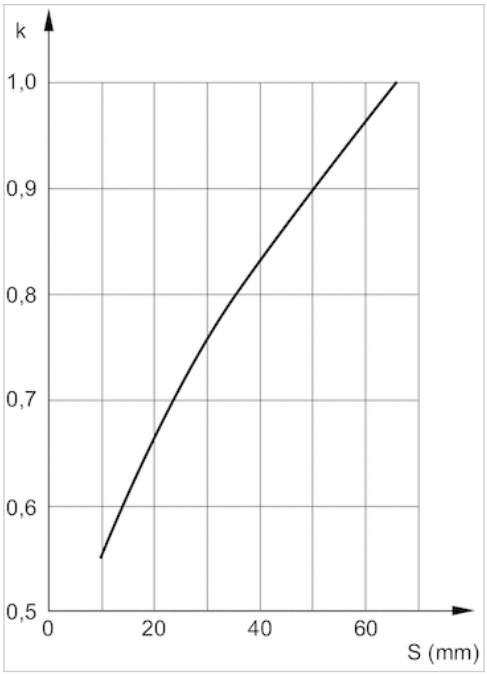

S = stroke
k=correction factor: normal=1, shock loaded=2
With a short stroke, the useful load figures determined from the diagram must be multiplied by the correction factor k.
These short-stroke adjustments are already included in the load diagram for a displacement of up to 60 mm.

Bending due to own load

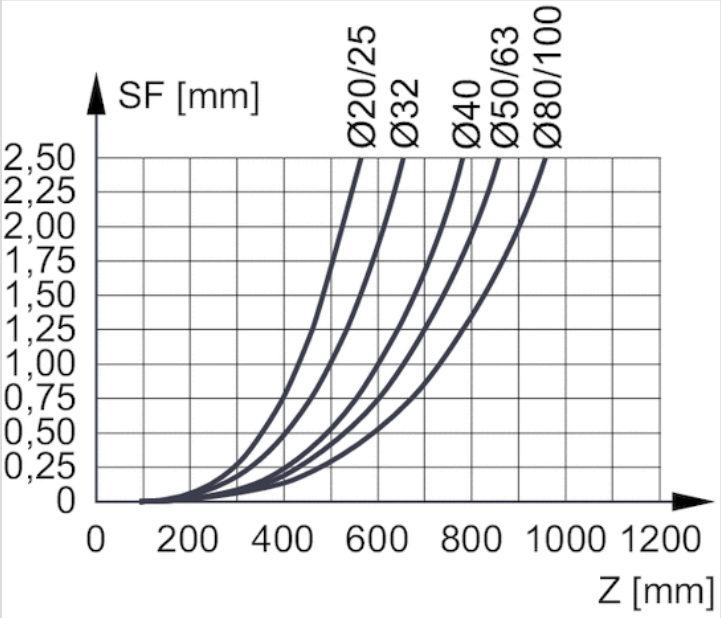

F = useful load (at the load center), SF = bending, Z = projection

Bending due to 10 N load

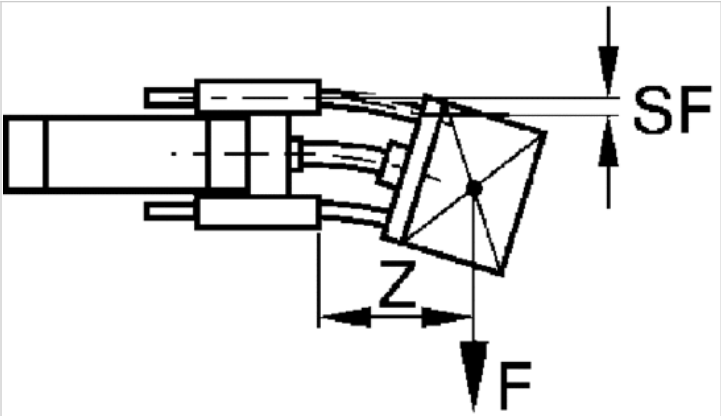

F = useful load (at the load center), SF = bending, Z = projection

Bending due to 10 N load

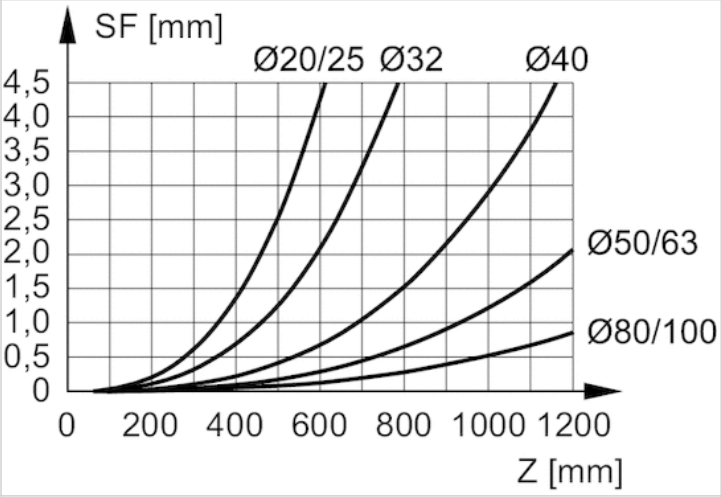

F = useful load (at the load center), SF = bending, Z = projection

Compensating coupling GU3 form B, series CG1



Technical data

Part No.	Suitable piston rod thread
R413000283	M8
R413000284	M10x1,25
R413000285	M20x1,5

Scope of delivery: flexible coupling incl. mounting screws

Technical information

Material	
	Stainless steel
	Steel

Dimensions

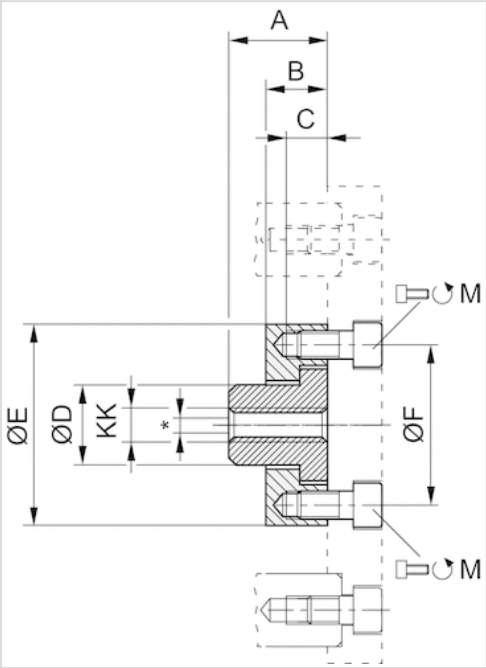

* Radial joint from 1,5 ... 1,8 mm

Dimensions

Part No.	KK	Ø	M	A	B	C	D	ØE	ØF
R413000283	M8	20	2x M5x12	22	6	6	14.5	SW 30	26
R413000284	M10x1,25	25/32	2x M5x12	17	6	6	14.5	SW 30	26
R413000285	M20x1,5	80/100	4x M6x20	32	14	9.5	30	60	51

Compensating coupling GU3 form C, series CG1



Technical data

Part No.	Suitable piston rod thread
R413000276	M6
R413000280	M12x1,25
R413000281	M16x1,5

Scope of delivery: flexible coupling incl. mounting screws

Technical information

Material	
	Stainless steel
	Steel

Dimensions

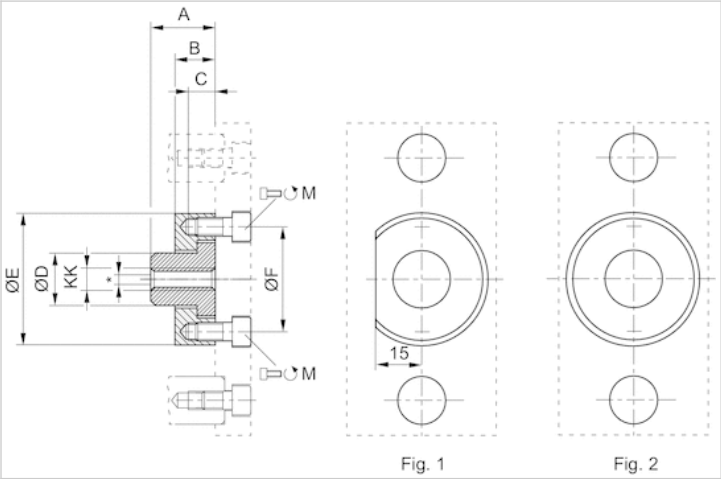

* Radial joint from 1,0 ... 2,5 mm

Dimensions

Part No.	KK	Ø	M	A	B	C	D	ØE	ØF
R413000276	M6	12/16	2x M4x10	18	7	7	10	22	15
R413000280	M12x1,25	40	2x M6x12	22	14	8	18	45	36
R413000281	M16x1,5	50/63	4x M6x14	26	14	8	24	54	45

Holding unit, Series HU1

- Ø 32-100 mm
- hold: spring force, release: compressed air



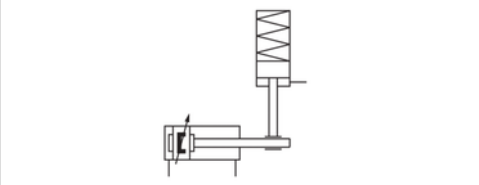

Function	Hold with clamping jaws
Release pressure	4 ... 8 bar
Ambient temperature min./max.	-10 ... 60 °C
Medium temperature min./max.	-10 ... 60 °C
Medium	Compressed air
Max. particle size	5 µm
Oil content of compressed air	0 ... 5 mg/m³
Weight	See table below

Technical data

Part No.	Piston Ø	suitable piston rod Ø	Piston rod extension	Compressed air connection	Static holding force	Weight
0821401165	32 mm	12 mm	42 mm	M5	650 N	0.2 kg
0821401166	40 mm	16 mm	45 mm	G 1/8	1100 N	0.27 kg
0821401167	50 mm	20 mm	57 mm	G 1/8	1600 N	0.57 kg
0821401168	63 mm	20 mm	57 mm	G 1/8	2500 N	0.8 kg
0821401169	80 mm	25 mm	77 mm	G 1/8	4000 N	1.85 kg
0821401170	100 mm	25 mm	77 mm	G 1/8	6300 N	2.9 kg

Holding force at 0 bar

Technical information

Warning: The holding unit may not be used for the following applications:
1) for dynamic holding
2) in or as safety equipment
Holding unit may only be unlocked when turned off.
Make sure that the load direction does not change during a holding interval. A change in the direction of force, as well as external forces such as impacts, strong vibrations, or torsional forces, will briefly release the piston rod and may destroy the HU1 holding unit.
When clamped, there must be no residual pressure on the holding unit (0 bar).
Note:
The minimum control pressure is >= the working pressure of the cylinder!

Technical information

Material	
Housing	Aluminum, black anodized

Dimensions

Dimensions

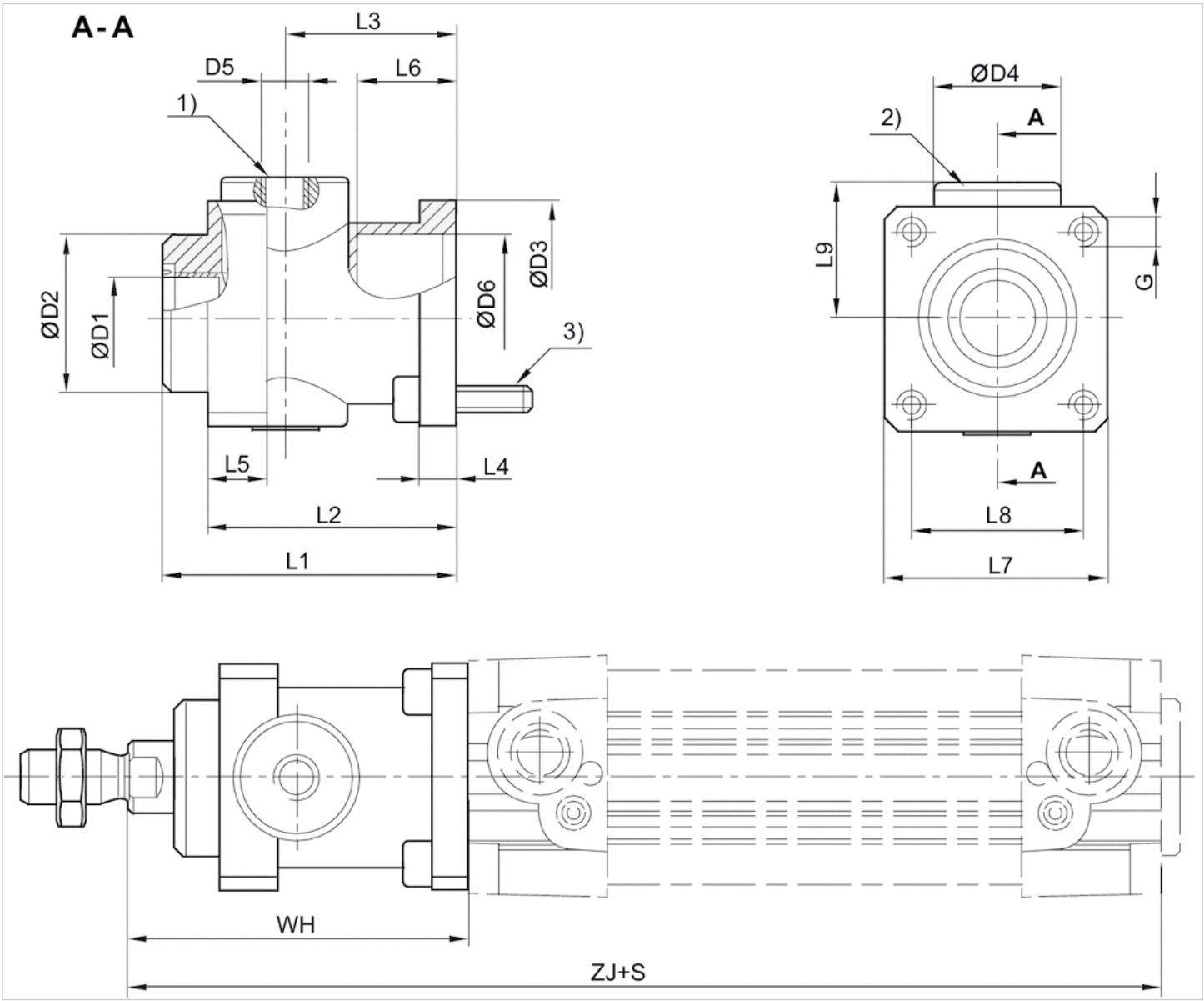

1) air connection
2) Holding cartridge
3) mounting screws 4x
S = stroke

Dimensions

Part No.	Piston Ø	Ø D1	Ø D2	Ø D3	Ø D4	D5	L1	L2	L3	L4	L5	L6	L7	L8	L9	G
0821401165	32 mm	12	30	35	25	M5	58	48	34	8	13	20.5	45	32.5	25.5	M6
0821401166	40 mm	16	35	40	28	G 1/8	65	55	38	8	13	22.5	50	38	30	M6
0821401167	50 mm	20	40	50	35	G 1/8	82	70	48	15	16	29.5	60	46.5	36	M8
0821401168	63 mm	20	45	60	38	G 1/8	82	70	49.5	15	16	29.5	70	56.5	40	M8
0821401169	80 mm	25	45	80	48	G 1/8	110	90	61	18	20	35	90	72	50	M10
0821401170	100 mm	25	55	100	58	G 1/8	115	100	69	18	20	–	105	89	58	M10

WH	ZJ
68	162
75	180
94	200
94	215
123	251
128	266

Locking unit, Series LU1

- Ø 32-100 mm
- Hold: adjustable spring force, Release: compressed air





Function	Clamp with eccentric tappet
Release pressure	2 ... 8 bar
Ambient temperature min./max.	-20 ... 80 °C
Medium temperature min./max.	-20 ... 80 °C
Medium	Compressed air
Max. particle size	5 µm
Oil content of compressed air	0 ... 5 mg/m³
Weight	See table below

Technical data

Part No.	Piston Ø	suitable piston rod Ø	Piston rod extension	Compressed air connection	Static holding force
0821401130	32 mm	12 mm	79 mm	G 1/8	840 N
0821401131	40 mm	16 mm	81 mm	G 1/8	1100 N
0821401132	50 63 mm	20 mm	100 mm	G 1/8	2700 N
0821401133	80 100 mm	25 mm	140 mm	G 1/8	5800 N

Part No.	Weight
0821401130	1.75 kg
0821401131	1.75 kg
0821401132	3 kg
0821401133	8.8 kg

Holding force at 0 bar, Mounting elements LU3, LU4, LU5 are required for assembly and must be ordered separately as accessories.

Technical information

Warning:
The Locking unit may not be used for the following applications:
- for dynamic holding
- in or as safety equipment

Locking unit may only be unlocked when turned off.
Note:
The minimum release pressure is >= the working pressure of the cylinder!
The holding force is dependent on the set spring force

Technical information

Material	
Housing	Aluminum, anodized
Cap	Die-cast aluminum

Dimensions

Dimensions

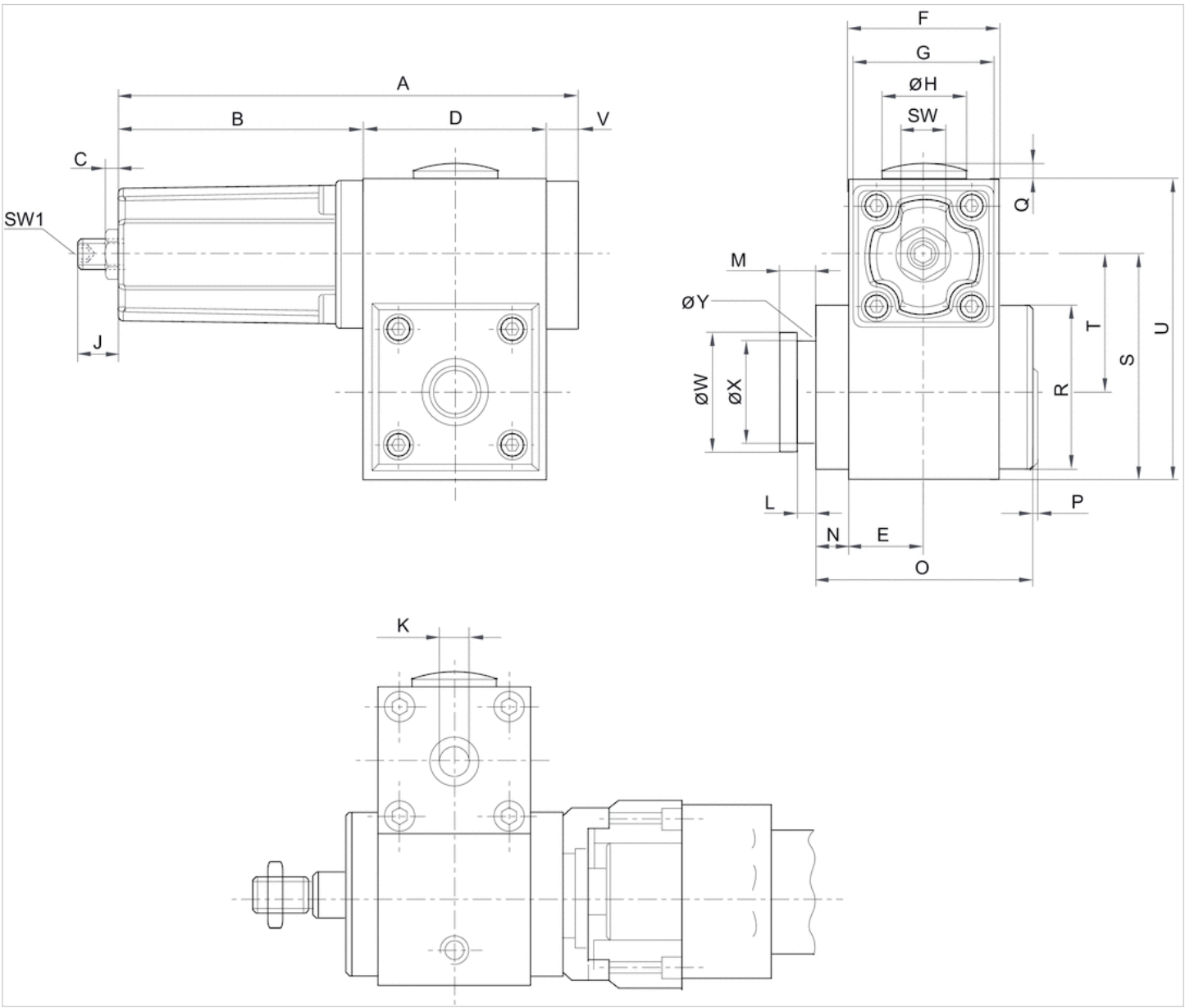

Dimensions

Part No.	A	B	C	D	E	F	G	ØH	J	K	L	M	N	O	P	Q	R	S	SW	SW1	T	U
0821401130	135	69	10	56	23	46	45	30	19	G 1/8	4.1	8	9	65	3	2.5	50	69	15	5	41.9	92
0821401131	135	69	10	56	23	46	45	30	18	G 1/8	5.1	10	9	65	3	2.5	50	69	15	5	40.5	92
0821401132	169	90	10	69	30	60	55	30	17	G 1/8	5.1	10	9	84	3	2.5	60	80	15	5	48	111
0821401133	208	98	16.7	100	40	80	65	37.5	15	G 1/8	8.1	16	13	118	3	2	90	119	24	8	72	155

V	ØW	ØX	ØY
10	29.9	24	3
10	39.9	30	3
10	39.9	30	3
10	54.9	40	5

Locking unit, Series LU1

- Ø 32-100 mm
- hold: spring force, release: compressed air



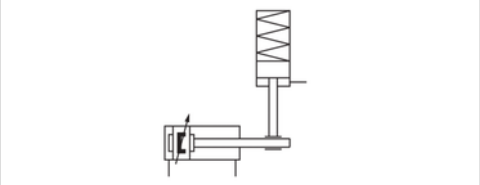

Function	Clamp with eccentric tappet
Release pressure	See table below
Ambient temperature min./max.	-20 ... 80 °C
Medium temperature min./max.	-20 ... 80 °C
Medium	Compressed air
Max. particle size	5 µm
Oil content of compressed air	0 ... 5 mg/m³
Weight	See table below

Technical data

Part No.	Piston Ø	suitable piston rod Ø	Piston rod extension	Compressed air connection	Release pressure
R412003730	32 mm	12 mm	79 mm	G 1/8	4.5 ... 8 bar
0821401134	32 mm	12 mm	79 mm	G 1/8	5.5 ... 8 bar
R412003731	40 mm	16 mm	81 mm	G 1/8	4.5 ... 8 bar
0821401135	40 mm	16 mm	81 mm	G 1/8	5.5 ... 8 bar
R412003732	50 63 mm	20 mm	100 mm	G 1/8	4.5 ... 8 bar
0821401136	50 63 mm	20 mm	100 mm	G 1/8	5.5 ... 8 bar
R412003733	80 100 mm	25 mm	140 mm	G 1/8	4.5 ... 8 bar
0821401137	80 100 mm	25 mm	140 mm	G 1/8	5.5 ... 8 bar

Part No.	Static holding force	Weight
R412003730	740 N	1.52 kg
0821401134	840 N	1.52 kg
R412003731	1000 N	1.5 kg
0821401135	1100 N	1.5 kg
R412003732	2300 N	2.56 kg
0821401136	2700 N	2.56 kg
R412003733	4000 N	7.7 kg
0821401137	5800 N	7.7 kg

Holding force at 0 bar, Mounting elements LU3, LU4, LU5 are required for assembly and must be ordered separately as accessories.

Technical information

Warning:
The Locking unit may not be used for the following applications:
- for dynamic holding
- in or as safety equipment
Locking unit may only be unlocked when turned off.

Technical information

Material	
Housing	Aluminum, anodized
Cap	Die-cast aluminum

Dimensions

Dimensions

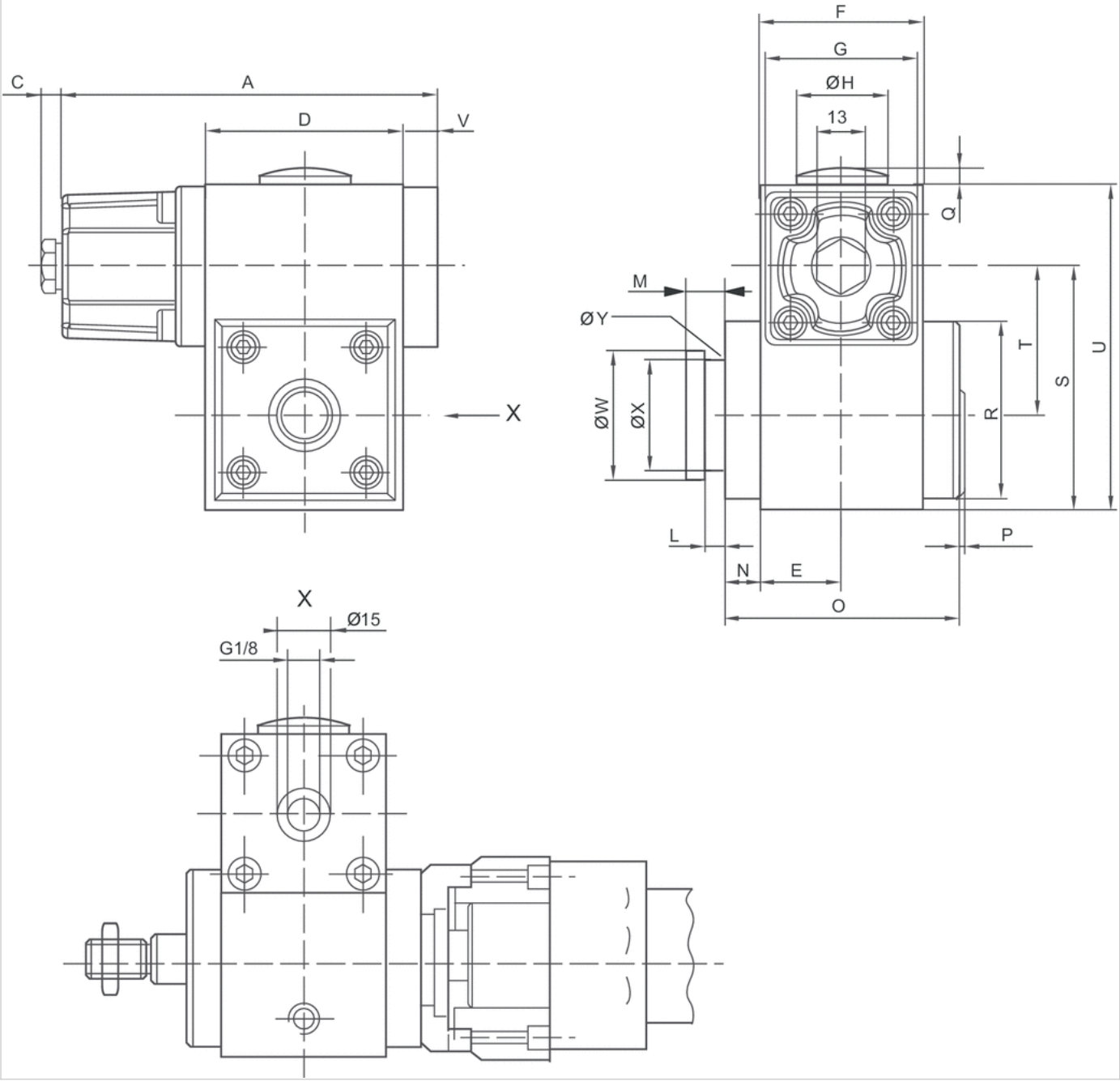

Dimensions

Part No.	A	C	D	E	F	G	Ø H	L	M	N	O	P	Q	R	S	T	U	V	Ø W	Ø X	Ø Y
R412003730	106	6	56	23	46	45	30	4.1	8	9	65	3	2.5	50	68.5	41.9	91.5	10	29.9	24	3
0821401134	106	6	56	23	46	45	30	4.1	8	9	65	3	2.5	50	68.5	41.9	91.5	10	29.9	24	3
R412003731	106	6	56	23	46	45	30	5.1	10	9	65	3	2.5	50	68.5	40.5	91.5	10	39.9	30	3
0821401135	106	6	56	23	46	45	30	5.1	10	9	65	3	2.5	50	68.5	40.5	91.5	10	39.9	30	3
R412003732	139.5	6	69	30	60	55	30	5.1	10	9	83.5	3	2.5	60	79.5	48	110	10	39.9	30	3
0821401136	139.5	6	69	30	60	55	30	5.1	10	9	83.5	3	2.5	60	79.5	48	110	10	39.9	30	3
R412003733	176.5	6	100	40	80	65	37.5	8.1	16	13	118	3	2	90	119	72	155	10	54.9	40	5
0821401137	176.5	6	100	40	80	65	37.5	8.1	16	13	118	3	2	90	119	72	155	10	54.9	40	5

Locking unit, Series LU6

- Ø 32-125 mm
- Holding and braking: non-adjustable spring, Release: compressed air



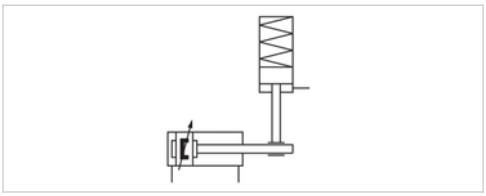

Version	Clamping jaw lock
Function	Static holding Dynamic braking
Release pressure	4 ... 10 bar
Ambient temperature min./max.	-25 ... 80 °C
Medium temperature min./max.	-25 ... 80 °C
Medium	Compressed air
Max. particle size	5 µm
Oil content of compressed air	0 mg/m³
Weight	See table below

Technical data

Part No.	Piston Ø	suitable piston rod Ø	Piston rod extension	Compressed air connection	Required flow rate
					Qn
5230996402	32 mm	12 mm	125 mm	G 1/8	50 l/min
5231996402	40 mm	16 mm	125 mm	G 1/8	70 l/min
5232996402	50 mm	20 mm	145 mm	G 1/8	140 l/min
5233996402	63 mm	20 mm	165 mm	G 1/8	240 l/min
5234996402	80 mm	25 mm	185 mm	G 1/8	450 l/min
5235996402	100 mm	25 mm	220 mm	G 1/8	700 l/min
5236996402	125 mm	32 mm	220 mm	G 1/4	1200 l/min

Part No.	Max. torsional moment of piston rod	B10d value static	B10d value dynamic
5230996402	0.5 Nm	5.000.000	2.000.000
5231996402	1 Nm	5.000.000	2.000.000
5232996402	2 Nm	5.000.000	2.000.000
5233996402	2.5 Nm	5.000.000	2.000.000
5234996402	5 Nm	5.000.000	2.000.000
5235996402	9 Nm	5.000.000	2.000.000
5236996402	15 Nm	5.000.000	2.000.000

Part No.	Buckling protection of the piston rod 1)		Weight	
	Max. cylinder stroke for Euler case 1	Max. cylinder stroke for Euler case 2		
5230996402	750 mm	400 mm	0.8 kg	1)
5231996402	1100 mm	550 mm	1 kg	1)
5232996402	1350 mm	700 mm	1.8 kg	1)
5233996402	950 mm	500 mm	2.8 kg	1)

Part No.	Buckling protection of the piston rod 1)		Weight	
	Max. cylinder stroke for Euler case 1	Max. cylinder stroke for Euler case 2		
5234996402	1350 mm	700 mm	5.5 kg	1)
5235996402	950 mm	500 mm	9.5 kg	1)
5236996402	1500 mm	800 mm	13.8 kg	2)

1) Only applies in dynamic cases, and only retracting DGUV certified

2) Only applies in dynamic cases, and only retracting

Technical data

Piston Ø	32 mm	40 mm	50 mm
Max. holding/braking force FLU6	760 N	1200 N	1900 N
Max. moving mass, external mmax	77 kg	122 kg	194 kg
Max. piston speed vmax	1 m/s	1 m/s	1 m/s
Max. total braking energy (MJ) Etotal	3.2 MJ	6 MJ	10 MJ
Max. braking energy per hour PLU6	720 J	1350 J	2250 J
Max. braking energy per braking cycle ELU6	4.8 J	9 J	15 J
Braking energy per braking cycle related to B10d EB10d	1.6 J	3 J	5 J
Brake response time (4 bar) tbrake	0.08 s	0.08 s	0.08 s
Brake response time (6.3 bar) tbrake	0.1 s	0.1 s	0.1 s
Brake response time (10 bar) tbrake	0.12 s	0.12 s	0.12 s

Piston Ø	63 mm	80 mm	100 mm
Max. holding/braking force FLU6	3000 N	5000 N	8000 N
Max. moving mass, external mmax	306 kg	510 kg	815 kg
Max. piston speed vmax	1 m/s	1 m/s	1 m/s
Max. total braking energy (MJ) Etotal	18 MJ	36 MJ	58 MJ
Max. braking energy per hour PLU6	4050 J	8100 J	13200 J
Max. braking energy per braking cycle ELU6	27 J	54 J	88 J
Braking energy per braking cycle related to B10d EB10d	9 J	18 J	29 J
Brake response time (4 bar) tbrake	0.08 s	0.08 s	0.09 s
Brake response time (6.3 bar) tbrake	0.1 s	0.1 s	0.11 s
Brake response time (10 bar) tbrake	0.12 s	0.12 s	0.13 s

Piston Ø	125 mm
Max. holding/braking force FLU6	12000 N
Max. moving mass, external mmax	1223 kg
Max. piston speed vmax	1 m/s
Max. total braking energy (MJ) Etotal	93 MJ
Max. braking energy per hour PLU6	21000 J
Max. braking energy per braking cycle ELU6	140 J
Braking energy per braking cycle related to B10d EB10d	47 J
Brake response time (4 bar) tbrake	0.09 s
Brake response time (6.3 bar) tbrake	0.11 s
Brake response time (10 bar) tbrake	0.13 s

The values for the max. braking energy per braking cycle are equivalent to the cushioning energy for cylinder series PRA and TRB.

Technical information

The maximum ambient and medium temperature is + 70 °C for the dynamic braking function.
Note:
Before pressurizing the locking unit, make sure that there is a balance of forces at the piston on the drive cylinder. Please see the operating instructions for further safety-relevant information. The locking unit can be used in controls with a max. performance level e in accordance with DIN EN ISO 13849-1 ("basic and well-tried safety principles"). For applications in category 2 to 4 controls, additional control measures according to DIN EN ISO 13849-1 are required.
The locking unit can be used as an individual component or pre-mounted on a cylinder..
Scope of delivery: LU6, each with 4 flange nuts, washers, and tie rods
For technical reasons, formulas and sample calculations have been moved to the MediaCentre (link to operating instructions).

Technical information

Material	
Housing	Aluminum, anodized
Seal	Nitrile butadiene rubber
Scraper	Nitrile butadiene rubber

Dimensions

Dimensions

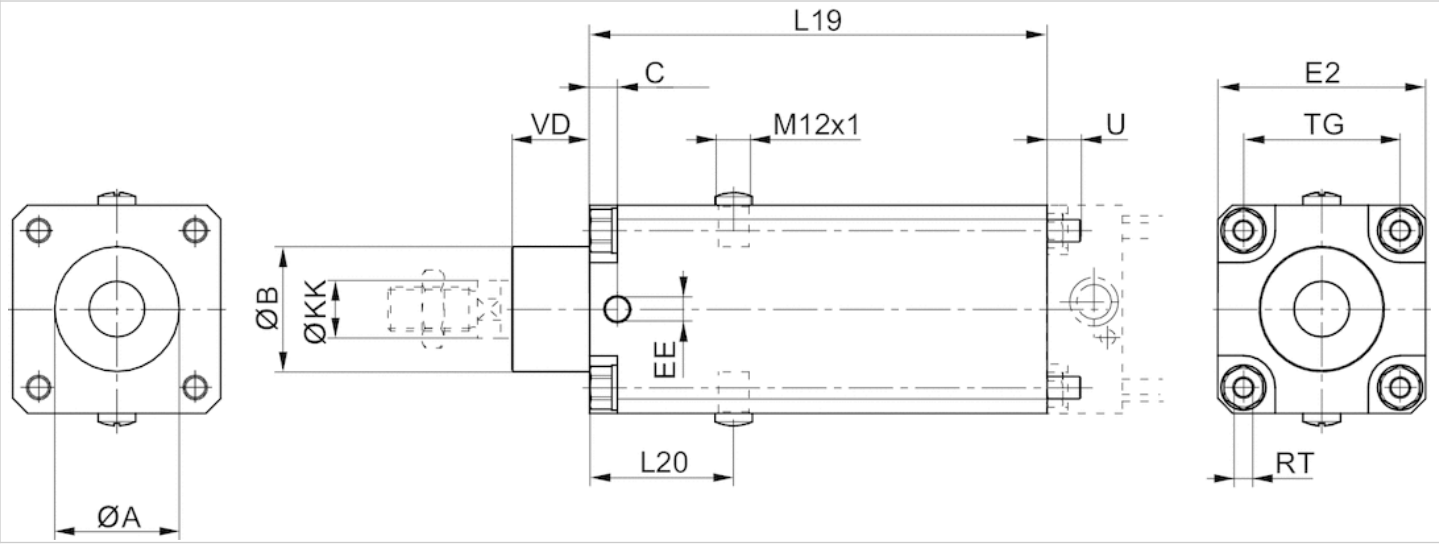

Dimensions

Piston Ø	ØA	ØB d11	C	EE	E2	L19	L20	ØKK e8-h9	TG	RT	U	VD
32 mm	30,5	30	9	G1/8	48	125	44	12	32,5	M6	10	19
40 mm	35,5	35	9	G1/8	53	125	44	16	38	M6	10	21
50 mm	40,5	40	9	G1/8	63	145	49	20	46,5	M8	11	28
63 mm	45,5	45	10	G1/8	75	165	52	20	56,5	M8	11	28
80 mm	45,5	45	11	G1/8	98	185	61.5	25	72	M10	16	34
100 mm	55,5	55	13	G1/8	118	220	68	25	89	M10	16	37
125 mm	60,5	60	13	G1/4	142	220	75	32	110	M12	16	45

Circuit diagram

Circuit example for non-safety relevant functions:, horizontal installation position

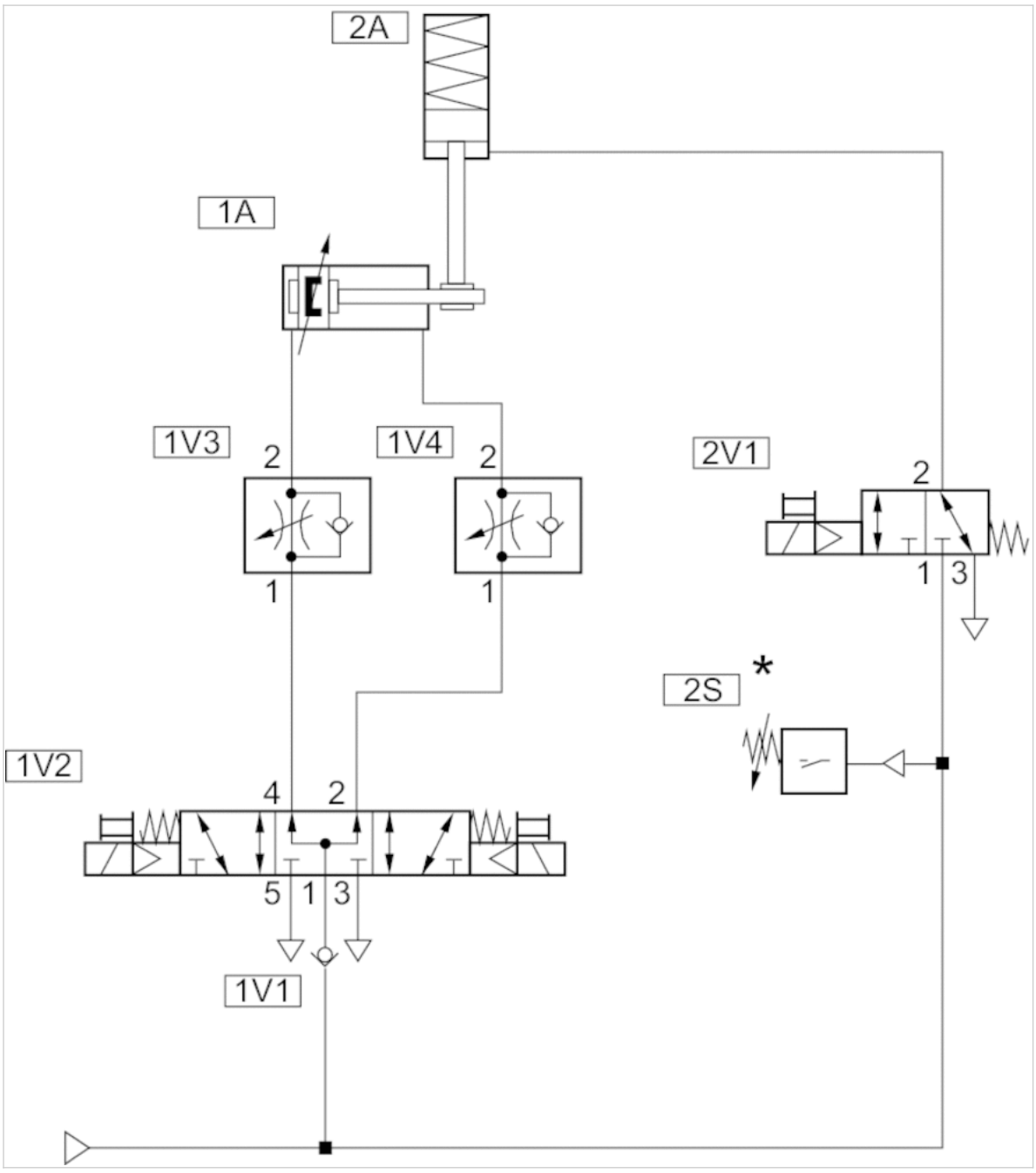

* From 4 bar : release of 2V1

Circuit example for non-safety relevant functions:, Vertical mounting orientation

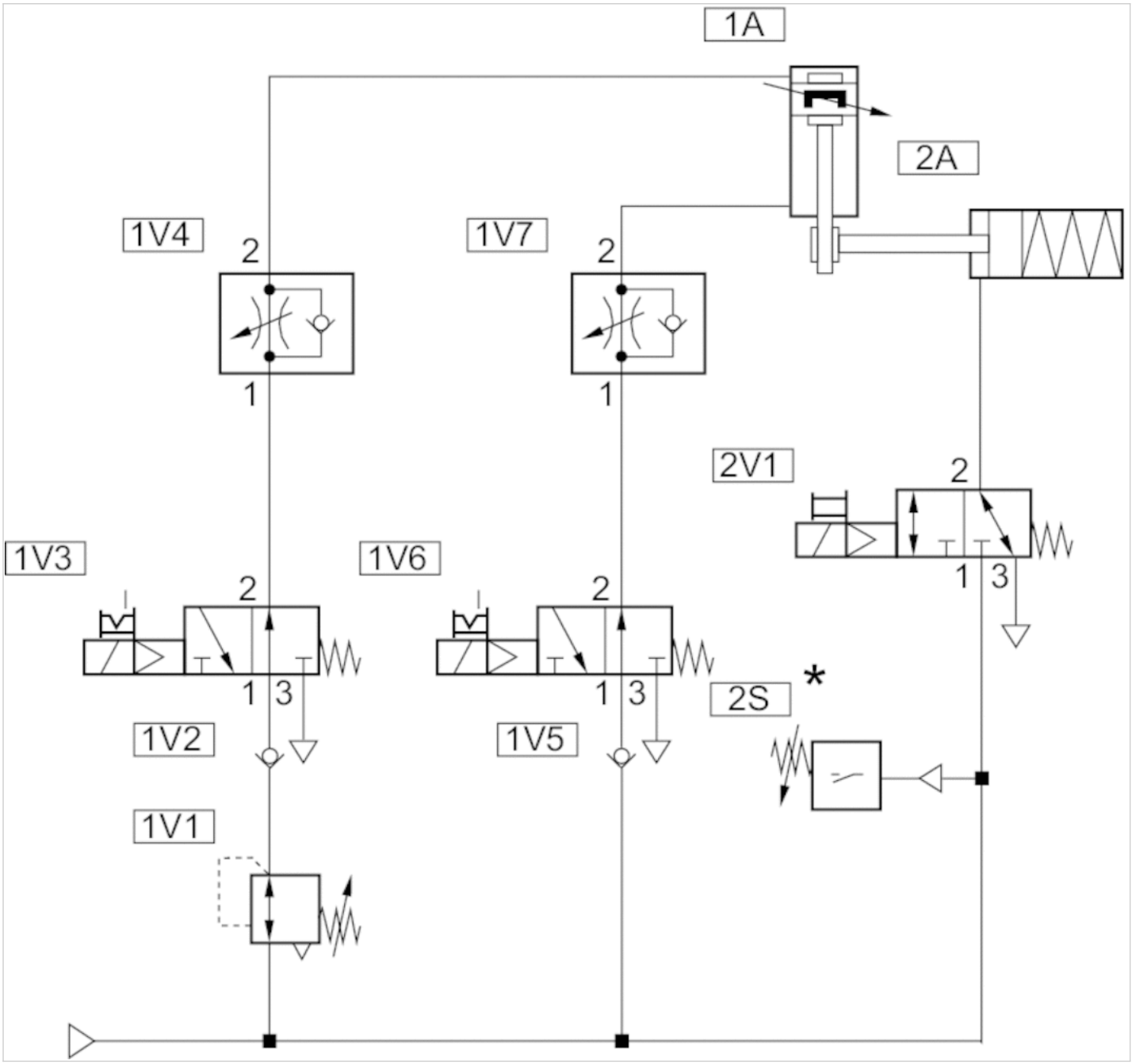

* From 4 bar : release of 2V1

Circuit example for safety-related stop functions:, horizontal installation position

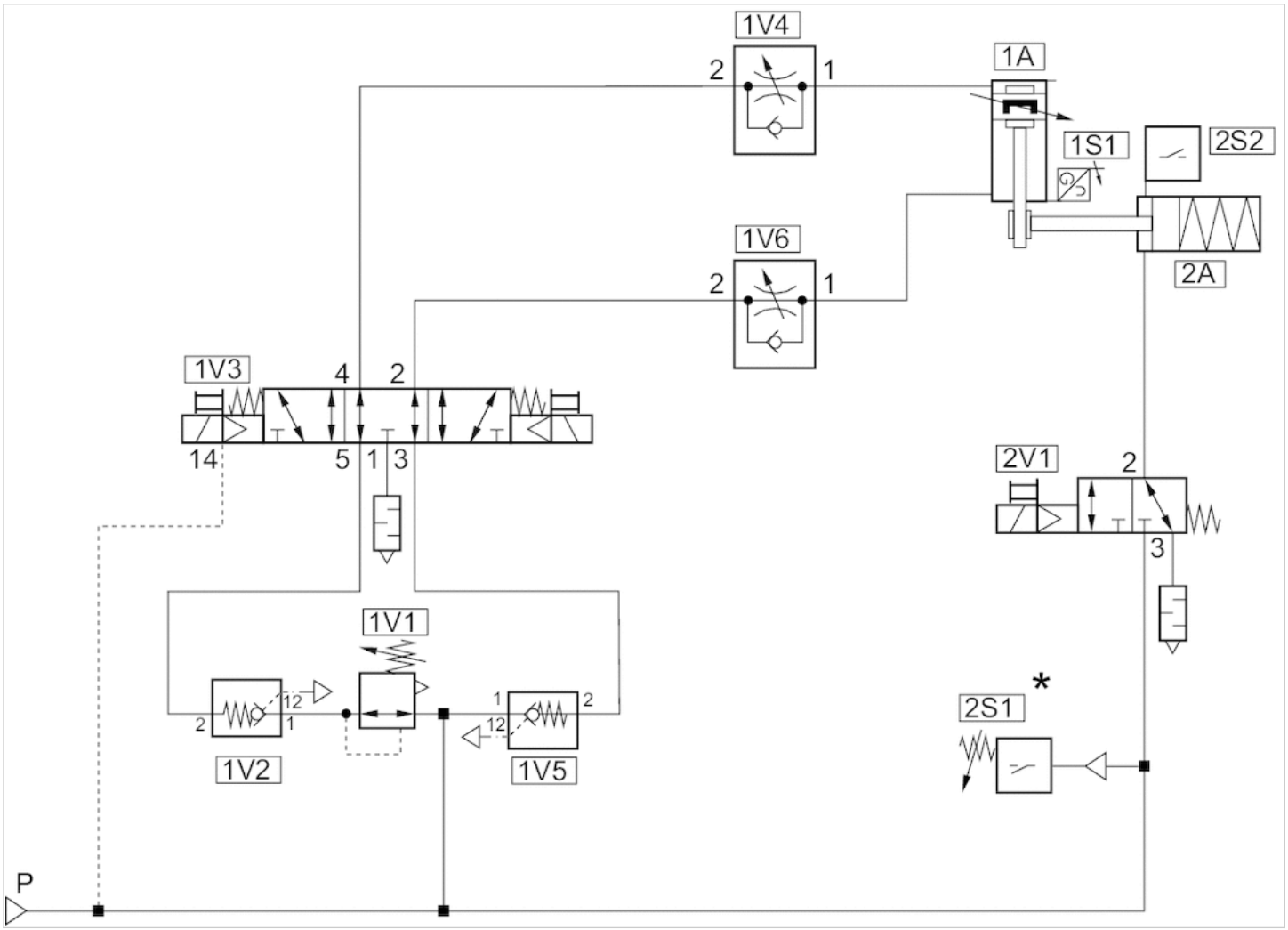

Channel 1: Safe stopping and closing
Channel 2: Safe brake control
* From 4 bar : release of 2V1

Circuit example for safety-related stop functions:, Vertical mounting orientation

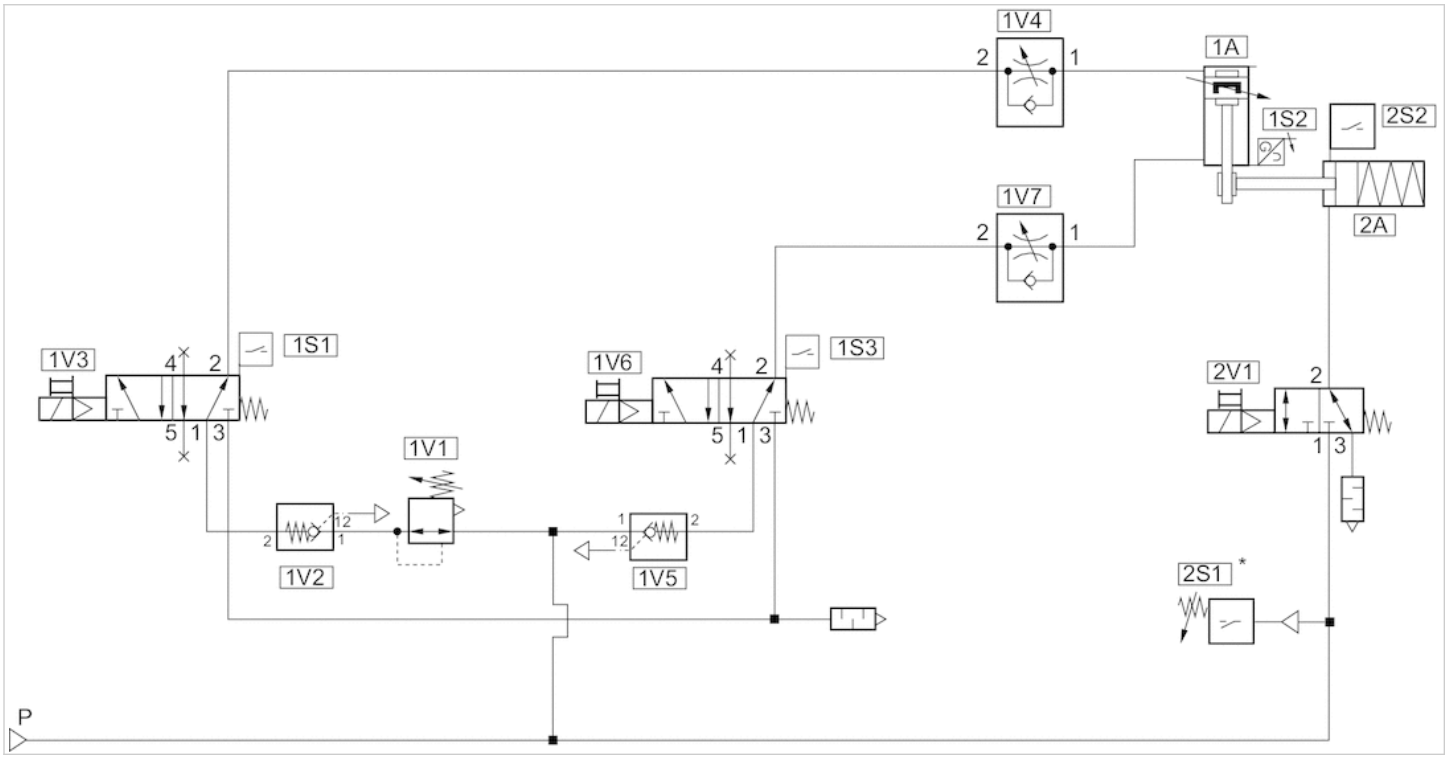

Channel 1: Safe stopping and closing
Channel 2: Safe brake control
* From 4 bar : release of 2V1

Foot mounting, Series LU4

- for cylinders with locking units
- Ø 32-100 mm



Ambient temperature min./max.	-20 ... 80 °C
Medium temperature min./max.	-20 ... 80 °C

Technical data

Part No.	Piston Ø
1827001520	32 mm
1827001521	40 mm
1827001522	50 mm
1827001526	63 mm
1827001524	80 mm
1827002152	100 mm

Technical information

Material	
Housing	Nodular graphite iron, galvanized

Dimensions

Dimensions

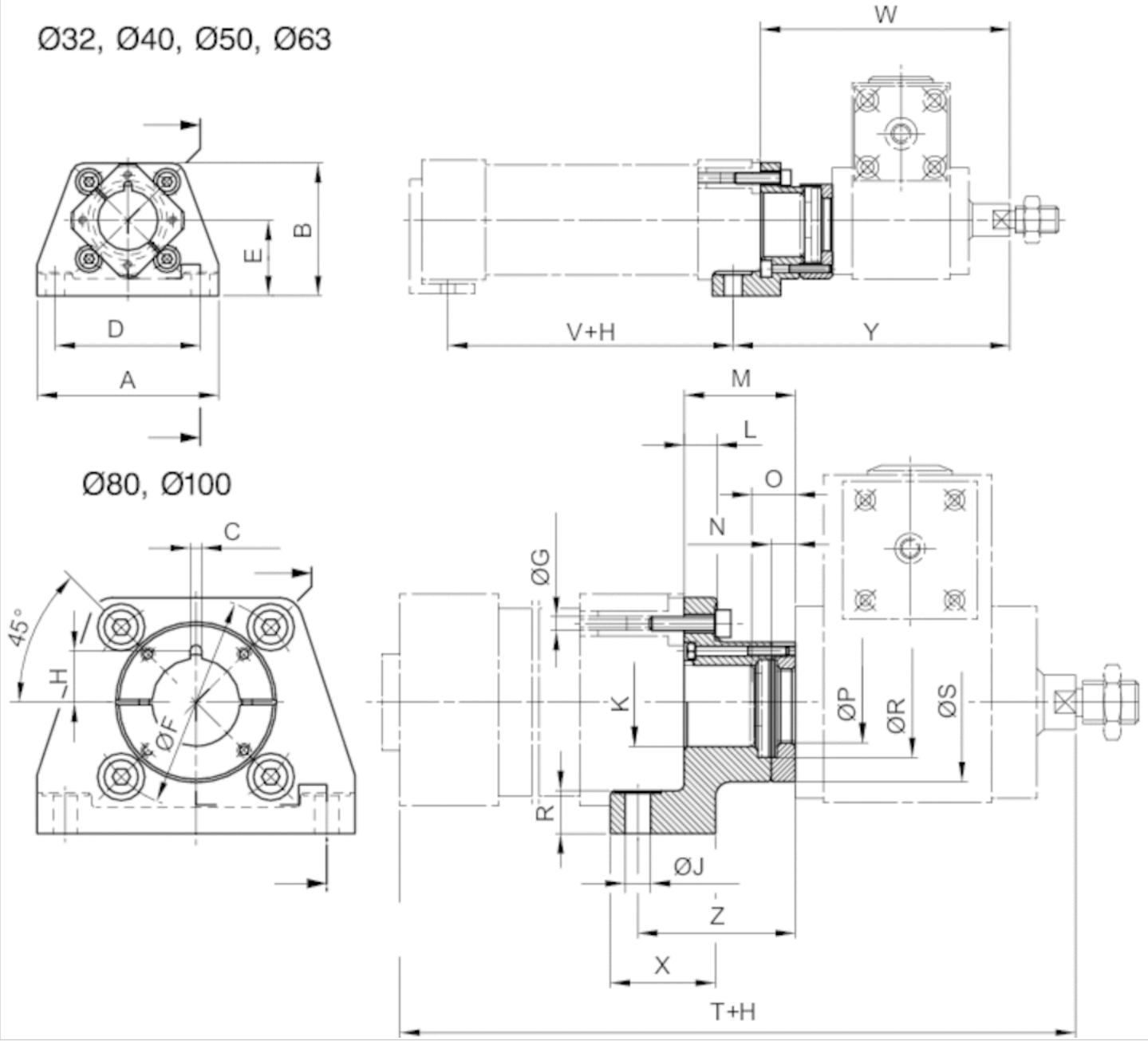

H = stroke
The locking unit can be rotated by 4x90°.

Dimensions

Part No.	A	B	C ±0,1	D ±0,1	E	Ø F	Ø G H13	I	J H8	K H10	L	M	N	O	Ø P	R
1827001520	79	57	3.6	65	32	46	6.6	13.2	6.6	30	7	27	3.9	–	24.2	9
1827001521	90	64	3.6	75	36	54	6.6	18.2	6.6	35	9.5	33	4.9	13	30.2	11
1827001522	110	80	3.6	90	45	66	8.4	18.2	9	40	11	38	4.9	–	30.2	15
1827001526	120	90	3.6	100	50	80	8.4	18.2	9	45	11	38	4.9	–	30.2	15
1827001524	153	113	6	128	63	102	10.5	24.5	11	45	15	52	7.9	18	40.2	19.5
1827002152	176	133	6	148	71	126	10.5	24.6	11	55	15	57	7.9	–	40.2	19.5

Ø R	Ø S	T	V	W	X	Y	Z
30	46.5	199	68	105	32	118	40
40	55.5	216	79	111	32	124	46
40	66	243	74	137	41	153	54
40	71	258	89	137	41	153	54
55	75	314	84	186	50	208	74
55	80	329	94	191	50	213	79

Flange mounting, Series LU5

- for cylinders with locking units
- Ø 32-100 mm



Ambient temperature min./max.	-20 ... 80 °C
Medium temperature min./max.	-20 ... 80 °C

Technical data

Part No.	Piston Ø
1827001512	32 mm
1827001513	40 mm
1827001514	50 mm
1827001503	63 mm
1827001516	80 mm
1827001517	100 mm

Technical information

Material	
Housing	Nodular graphite iron, galvanized

Dimensions

Dimensions

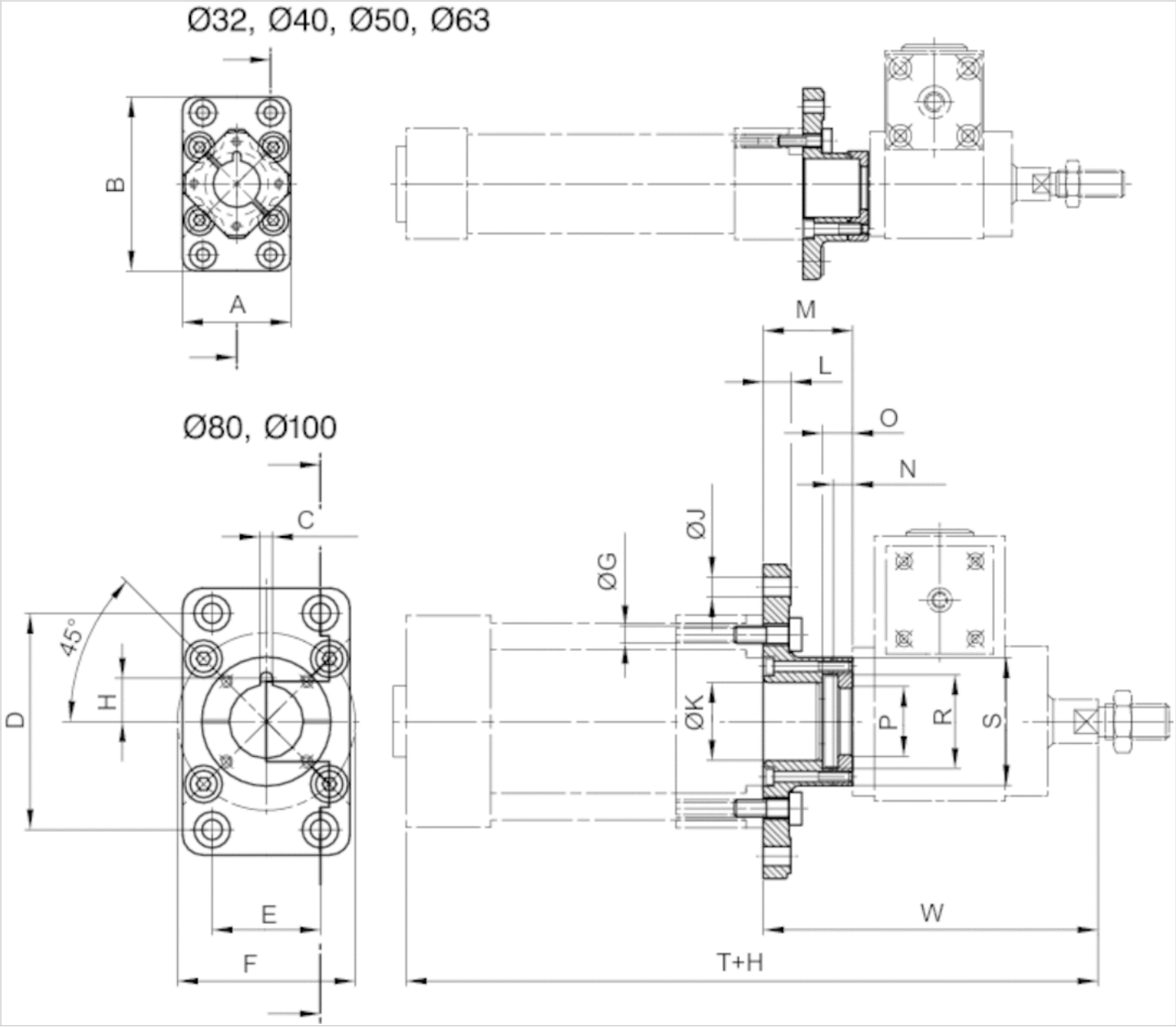

Dimensions

Part No.	A	B	C ±0,1	D ±0,1	E ±0,1	Ø F ±0,2	Ø G H13	H	Ø J H13	Ø K H10	L	M
1827001512	50	79	3.6	64	32	46	6.6	13.2	7	30	8	27
1827001513	56	91	3.6	72	36	54	6.6	18.2	9	35	10	33.3
1827001514	70	111	3.6	90	45	66	8.4	18.2	9	40	12	38.3
1827001503	80	120	3.6	100	50	80	8.4	18.2	9	45	12	38.3
1827001516	100	153	6	126	63	102	10.5	24.5	12	45	16	52
1827001517	120	178	6	150	75	126	10.5	24.6	14	55	16	57

N ±0,1	O	Ø P +0,2	Ø R +0,5	Ø S	W
3.9	8	24.2	33	50	105
4.9	10	30.2	40	55.5	111

N ±0,1	O	Ø P +0,2	Ø R +0,5	Ø S	W
4.9	10	30.2	40	66	137
4.9	10	30.2	40	71	137
7.9	16	40.2	55	75	186
7.9	16	40.2	55	80	191

Mounting flange, Series LU3

- for cylinders with locking units
- Ø 32-100 mm



Ambient temperature min./max.	-20 ... 80 °C
Medium temperature min./max.	-20 ... 80 °C
Weight	See table below

Technical data

Part No.	Piston Ø	Weight
1827001504	32 mm	0.235 kg
1827001505	40 mm	0.36 kg
1827001506	50 mm	0.635 kg
1827001508	63 mm	0.84 kg
1827001433	80 mm	1.62 kg
1827001434	100 mm	2.27 kg

Technical information

Material	
Housing	Nodular graphite iron, galvanized

Dimensions

Dimensions

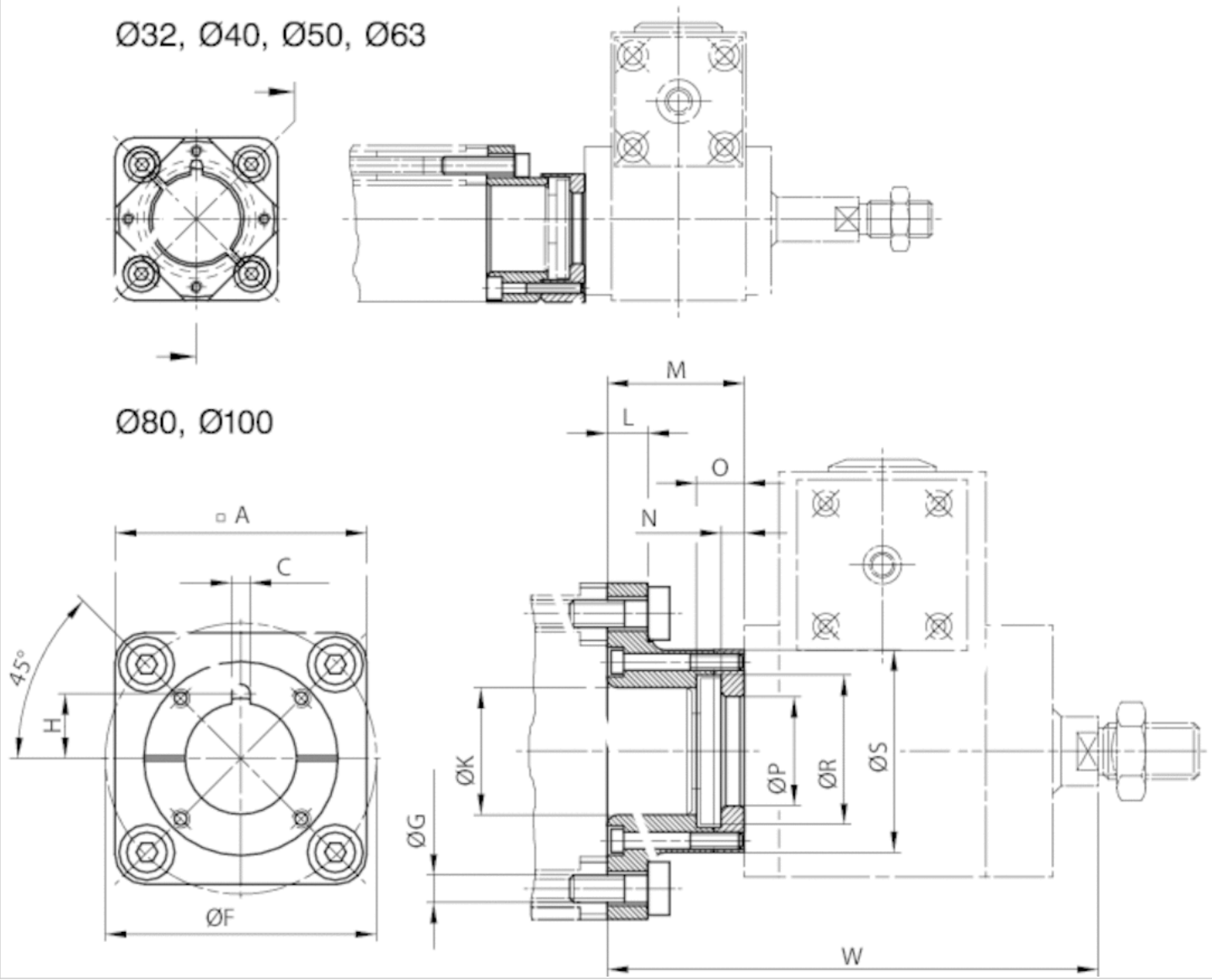

Screws included in scope of delivery
The locking unit can be rotated by 4x90°.

Dimensions

Part No.	A	C +0,1	Ø F ±0,2	G H13	H	Ø K H10	L	M	N -0,1	O	Ø P +0,2	Ø R +0,5
1827001504	50	3.6	46	6.6	13.2	30	7	27.2	3.9	8	24.2	33
1827001505	57	3.6	54	6.6	18.2	35	9.5	33.3	4.9	10	30.2	40
1827001506	68	3.6	66	8.4	18.2	40	11	38.3	4.9	10	30.2	40
1827001508	75	3.6	80	8.4	18.2	45	11	38.3	4.9	10	30.2	40
1827001433	95	6	102	10.5	24.5	45	15	52	7.9	16	40.2	55
1827001434	115	6	126	10.5	24.6	55	15	57	7.9	16	40.2	55

Ø S	W
46.5	105
55.5	111

Ø S	W
66	137
71	137
75	186
80	191

Modular sealing system

- Ø 32 mm ... 125 mm
- For series PRA, TRB, CCL-IS
- Piston Ø 32 40 50, 63 80, 100 125 mm



Working pressure min./max.	1.5 ... 10 bar
Ambient temperature min./max.	See table below
Medium	Compressed air
Oil content of compressed air	0 ... 5 mg/m³

Technical data

Part No.	Piston Ø	Piston rod seal	Scraper
0496400704	32 mm	Acrylonitrile butadiene rubber	Polyester elastomer
0496401107	32 mm	Acrylonitrile butadiene rubber	Polytetrafluorethylene
0496401700	32 mm	Fluorocaoutchouc	Polytetrafluorethylene
0496400402	40 mm	Acrylonitrile butadiene rubber	Brass
0496401409	40 mm	Fluorocaoutchouc	Brass
0496400801	40 mm	Acrylonitrile butadiene rubber	Polyester elastomer
0496401204	40 mm	Acrylonitrile butadiene rubber	Polytetrafluorethylene
0496401808	40 mm	Fluorocaoutchouc	Polytetrafluorethylene
0496400518	50, 63 mm	Acrylonitrile butadiene rubber	Brass
0496401506	50, 63 mm	Fluorocaoutchouc	Brass
0496400909	50, 63 mm	Acrylonitrile butadiene rubber	Polyester elastomer
0496402103	50, 63 mm	Acrylonitrile butadiene rubber	Polytetrafluorethylene
0496401905	50, 63 mm	Fluorocaoutchouc	Polytetrafluorethylene
0496400607	80, 100 mm	Acrylonitrile butadiene rubber	Brass
0496401603	80, 100 mm	Fluorocaoutchouc	Brass
0496401018	80, 100 mm	Acrylonitrile butadiene rubber	Polyester elastomer
0496402200	80, 100 mm	Acrylonitrile butadiene rubber	Polytetrafluorethylene
0496402006	80, 100 mm	Fluorocaoutchouc	Polytetrafluorethylene
0496301404	125 mm	Acrylonitrile butadiene rubber	Brass
0496303105	125 mm	Fluorocaoutchouc	Brass
0496301307	125 mm	Acrylonitrile butadiene rubber	Polyester elastomer
0496301706	125 mm	Acrylonitrile butadiene rubber	Polytetrafluorethylene
0496303202	125 mm	Fluorocaoutchouc	Polytetrafluorethylene

Part No.	Ambient temperature min./max.	Application area
0496400704	-20 ... 80 °C	1)
0496401107	-20 ... 80 °C	2)

Part No.	Ambient temperature min./max.	Application area
0496401700	-10 ... 150 °C	2)
0496400402	-20 ... 80 °C	3)
0496401409	-10 ... 150 °C	3)
0496400801	-20 ... 80 °C	1)
0496401204	-20 ... 80 °C	2)
0496401808	-10 ... 150 °C	2)
0496400518	-20 ... 80 °C	3)
0496401506	-10 ... 150 °C	3)
0496400909	-20 ... 80 °C	1)
0496402103	-20 ... 80 °C	2)
0496401905	-10 ... 150 °C	2)
0496400607	-20 ... 80 °C	3)
0496401603	-10 ... 150 °C	3)
0496401018	-20 ... 80 °C	1)
0496402200	-20 ... 80 °C	2)
0496402006	-10 ... 150 °C	2)
0496301404	-20 ... 80 °C	3)
0496303105	-10 ... 150 °C	3)
0496301307	-20 ... 80 °C	1)
0496301706	-20 ... 80 °C	2)
0496303202	-10 ... 150 °C	2)

1)Application area Paper/printing industry Textile industry

2)Application area Textile industry Food industry Chemical industry Sugar production

3)Application area Chemical industry Sugar production Steel construction Automotive industry Woodworking industry

Technical information

Material	
Housing	Aluminum, anodized
Scraper	Polyester elastomer Polytetrafluorethylene Brass
Piston rod seal	Acrylonitrile butadiene rubber Fluorocaoutchouc

Dimensions

For cylinder diameters: 32-40 mm, Dimensions in mm

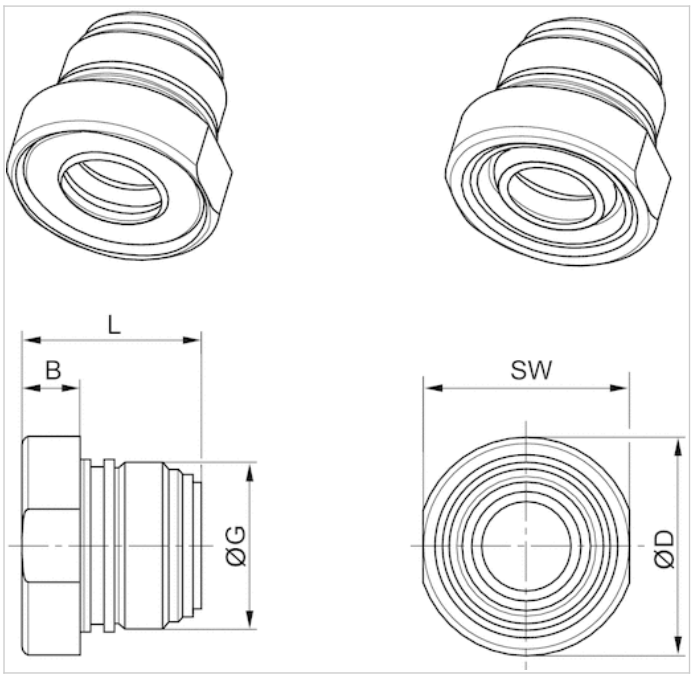

For cylinder diameters: 50 ... 125 mm, Dimensions in mm

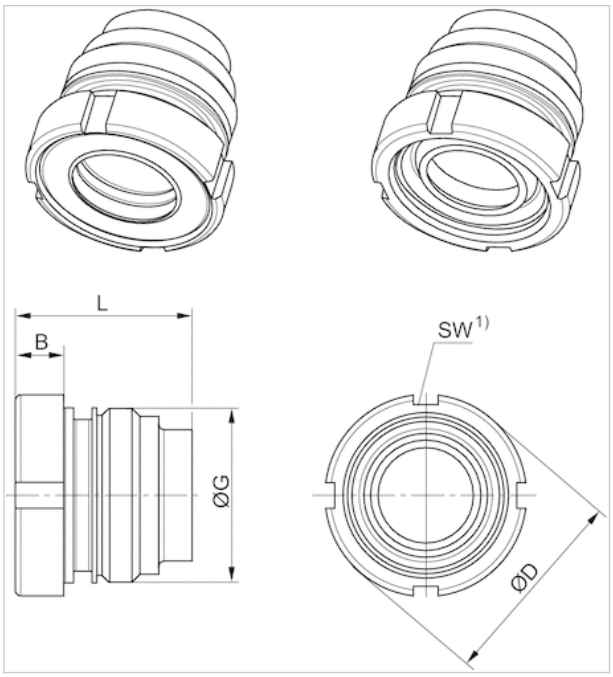

1) Can be mounted with hook wrench in accordance with DIN 1810 A

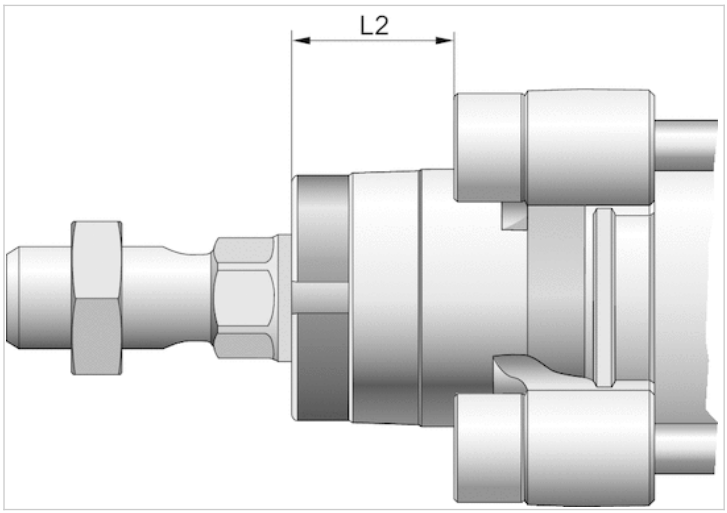

Dimensions

Piston Ø	B	ØD	G	L	L2	SW
32	6.7	24.5	M22x1	23	16.25	23
40	9.2	34	M26x1,5	28.1	18.25	32
50, 63	9	38.5	M33x2	33.5	25	40-42
80, 100	10	44	M40x2	44	33	45-50
125	12	57	M50x2	56	45	58-62

Dimensions

For cylinder diameters: 32-40 mm, Dimensions in mm

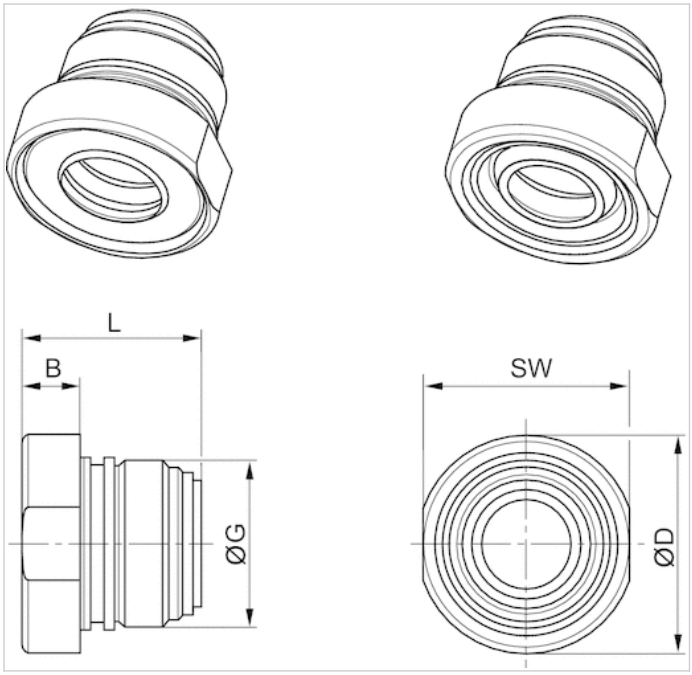

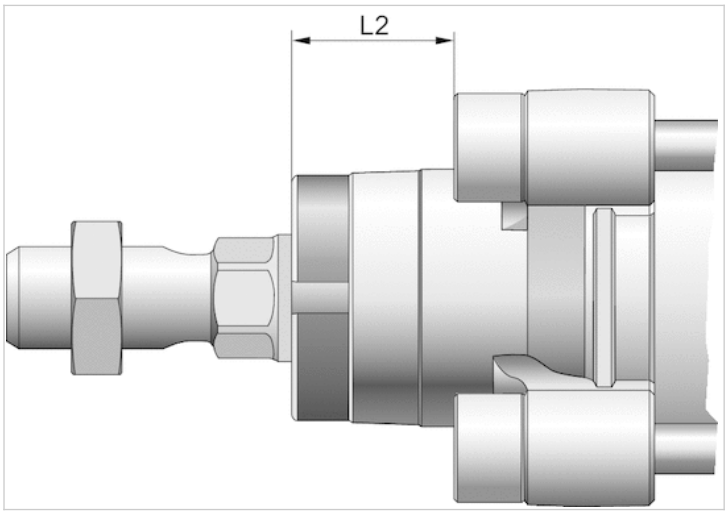

Dimensions

Piston Ø	B	ØD	G	L	L2	SW
32	6.7	24.5	M22x1	23	16.25	23
40	9.2	34	M26x1,5	28.1	18.25	32
50, 63	9	38.5	M33x2	33.5	25	40-42
80, 100	10	44	M40x2	44	33	45-50
125	12	57	M50x2	56	45	58-62

Dimensions

For cylinder diameters: 50 ... 125 mm, Dimensions in mm

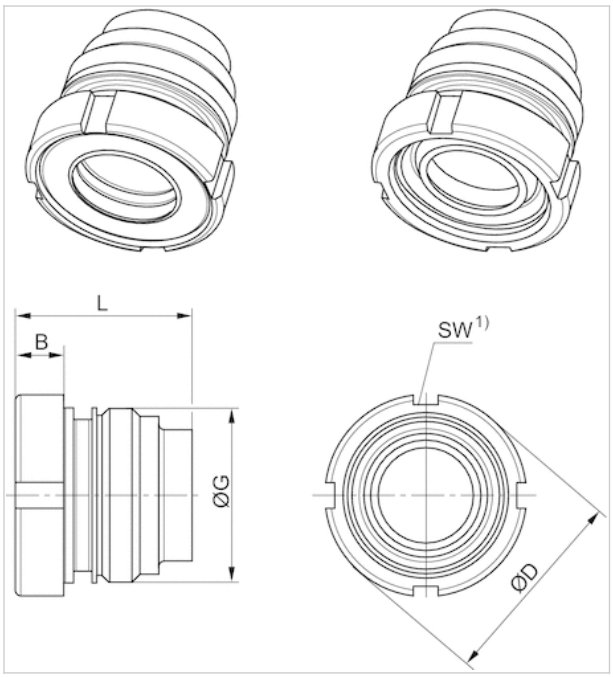

1) Can be mounted with hook wrench in accordance with DIN 1810 A

Sensor, Series ST4

- 4 mm T-slot
- with cable
- open cable ends, 3-pin
- UL certification
- Reed electronic PNP electronic NPN
- Direct mounting for series PRA, SSI, GSU, RTC, CKP, GPC, MSC, MSN, RCM, CVI
- Indirect mounting for series MNI, CSL-RD, ICM



Certificates	UL (Underwriters Laboratories) cULus RoHS
Ambient temperature min./max.	-30 ... 80 °C
Protection class	IP65, IP67
Switching point precision	±0,1 mT
Min./max. DC operating voltage	See table below
Switching logic	NO (make contact)
Display	LED
LED status display	Yellow
Vibration resistance	10 - 55 Hz, 1 mm
Shock resistance	30 g / 11 ms
Cable length L	3 5 m
Mounting screw	Combination: slotted and hexagon socket

Technical data

Part No.		for
R412019488		PRA, SSI, GSU, RTC, CKP, GPC, MSC, MSN, RCM, CVI
R412019489		PRA, SSI, GSU, RTC, CKP, GPC, MSC, MSN, RCM, CVI
R412019680		PRA, SSI, GSU, RTC, CKP, GPC, MSC, MSN, RCM, CVI
R412019681		PRA, SSI, GSU, RTC, CKP, GPC, MSC, MSN, RCM, CVI
R412019684		PRA, SSI, GSU, RTC, CKP, GPC, MSC, MSN, RCM, CVI
R412019685		PRA, SSI, GSU, RTC, CKP, GPC, MSC, MSN, RCM, CVI

Part No.	Type of contact	Cable length L	Min./max. DC operating voltage
R412019488	Reed	3 m	5 ... 30 V DC
R412019489	Reed	5 m	5 ... 30 V DC
R412019680	electronic PNP	3 m	10 ... 30 V DC
R412019681	electronic PNP	5 m	10 ... 30 V DC
R412019684	electronic NPN	3 m	10 ... 30 V DC
R412019685	electronic NPN	5 m	10 ... 30 V DC

Part No.	Voltage drop U at Imax	DC switching current, max.
R412019488	≤ 0,5 V	0.13 A
R412019489	≤ 0,5 V	0.13 A
R412019680	≤ 2,5 V	0.1 A
R412019681	≤ 2,5 V	0.1 A

Part No.	Voltage drop U at Imax	DC switching current, max.
R412019684	≤ 2,5 V	0.1 A
R412019685	≤ 2,5 V	0.1 A

Part No.	AC switching current, max.	Switching capacity
R412019488	0.13 A	3 W / 3 VA
R412019489	0.13 A	3 W / 3 VA
R412019680	-	-
R412019681	-	-
R412019684	-	-
R412019685	-	-

Part No.	Version
R412019488	Protected against polarity reversal
R412019489	Protected against polarity reversal
R412019680	short circuit resistant Protected against polarity reversal
R412019681	short circuit resistant Protected against polarity reversal
R412019684	short circuit resistant Protected against polarity reversal
R412019685	short circuit resistant Protected against polarity reversal

Technical information

The max. switching capacity must not be exceeded.

Technical information

Material	
Housing	Polyamide fiber-glass reinforced
Cable sheath	Polyurethane

Dimensions

Dimensions

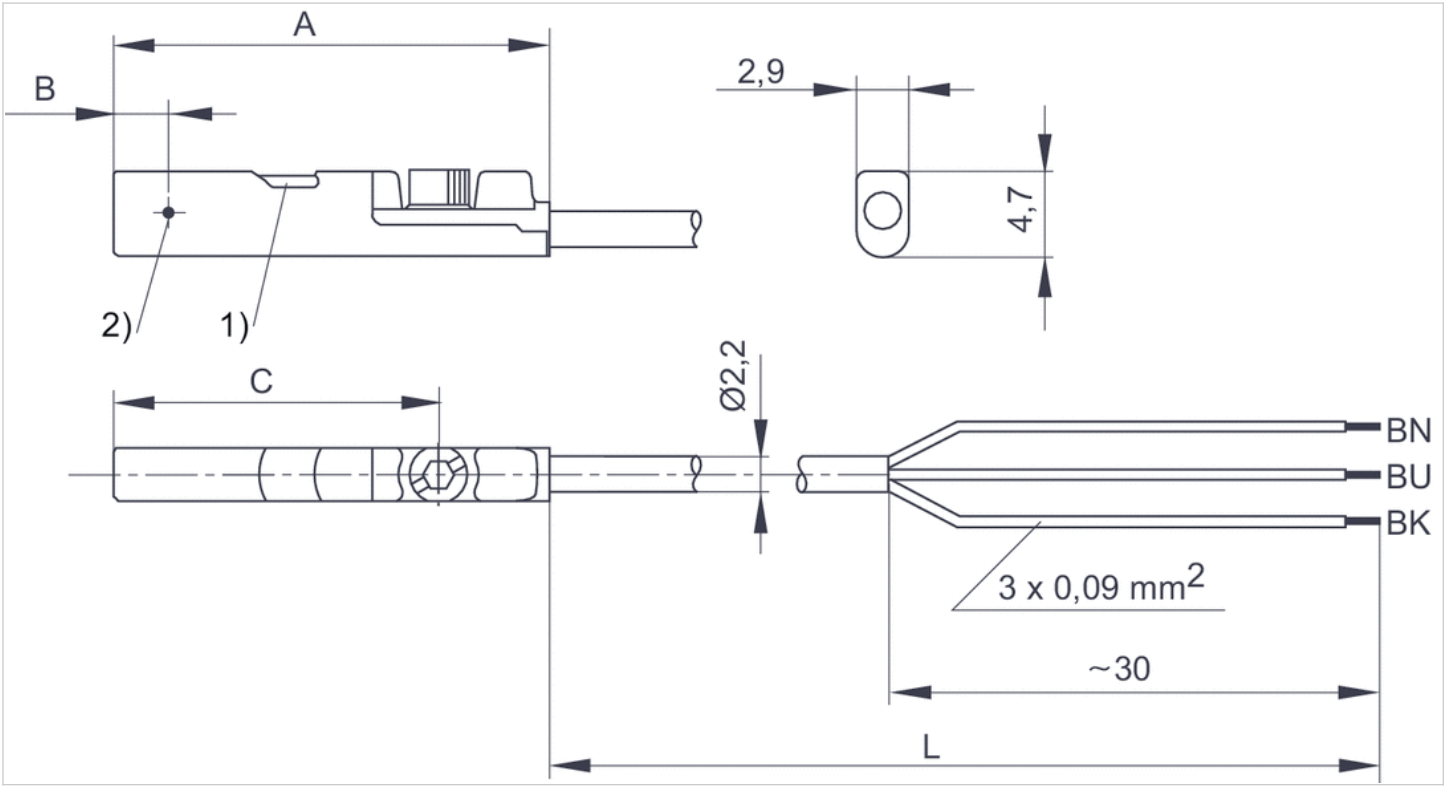

1) LED 2) Switching point
L = cable length
BN = brown, BK = black, BU = blue

Dimensions

Part No.	A	B	C
R412019488	26.3	6.3	20.3
R412019489	26.3	6.3	20.3
R412019680	23.7	2.8	17.7
R412019681	23.7	2.8	17.7
R412019684	23.7	2.8	17.7
R412019685	23.7	2.8	17.7

Sensor, Series ST4

- 4 mm T-slot
- with cable
- open cable ends
- With stretched impulse
- With stretched impulse
- electronic PNP
- Direct mounting for series PRA, SSI, GSU, RTC, CKP, GPC, MSC, MSN, RCM, CVI
- Indirect mounting for series MNI, CSL-RD, ICM



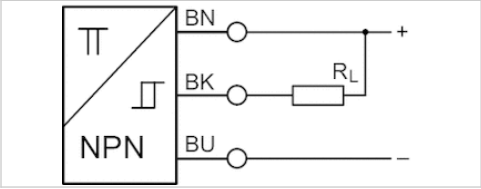

Certificates	RoHS
Ambient temperature min./max.	-30 ... 80 °C
Protection class	IP65, IP67
Switching point precision	±0,1 mT
Min./max. DC operating voltage	10 ... 30 V DC
Switching logic	NO (make contact)
Pulse stretching	20 ms
Display	LED
LED status display	Yellow
Vibration resistance	10 - 55 Hz, 1 mm
Shock resistance	30 g / 11 ms
Cable length L	5 m
Mounting screw	Combination: slotted and hexagon socket

Technical data

Part No.	for	Type of contact
R412024124	PRA, SSI, GSU, RTC, CKP, GPC, MSC, MSN, RCM, CVI	electronic PNP

Part No.	Cable length L	Voltage drop U at Imax	DC switching current, max.
R412024124	5 m	≤ 2,5 V	0.1 A

Part No.	Switch signal
R412024124	With stretched impulse

Technical information

The max. switching capacity must not be exceeded.

Technical information

Material	
Housing	Polyamide fiber-glass reinforced
Cable sheath	Polyurethane

Dimensions

Dimensions

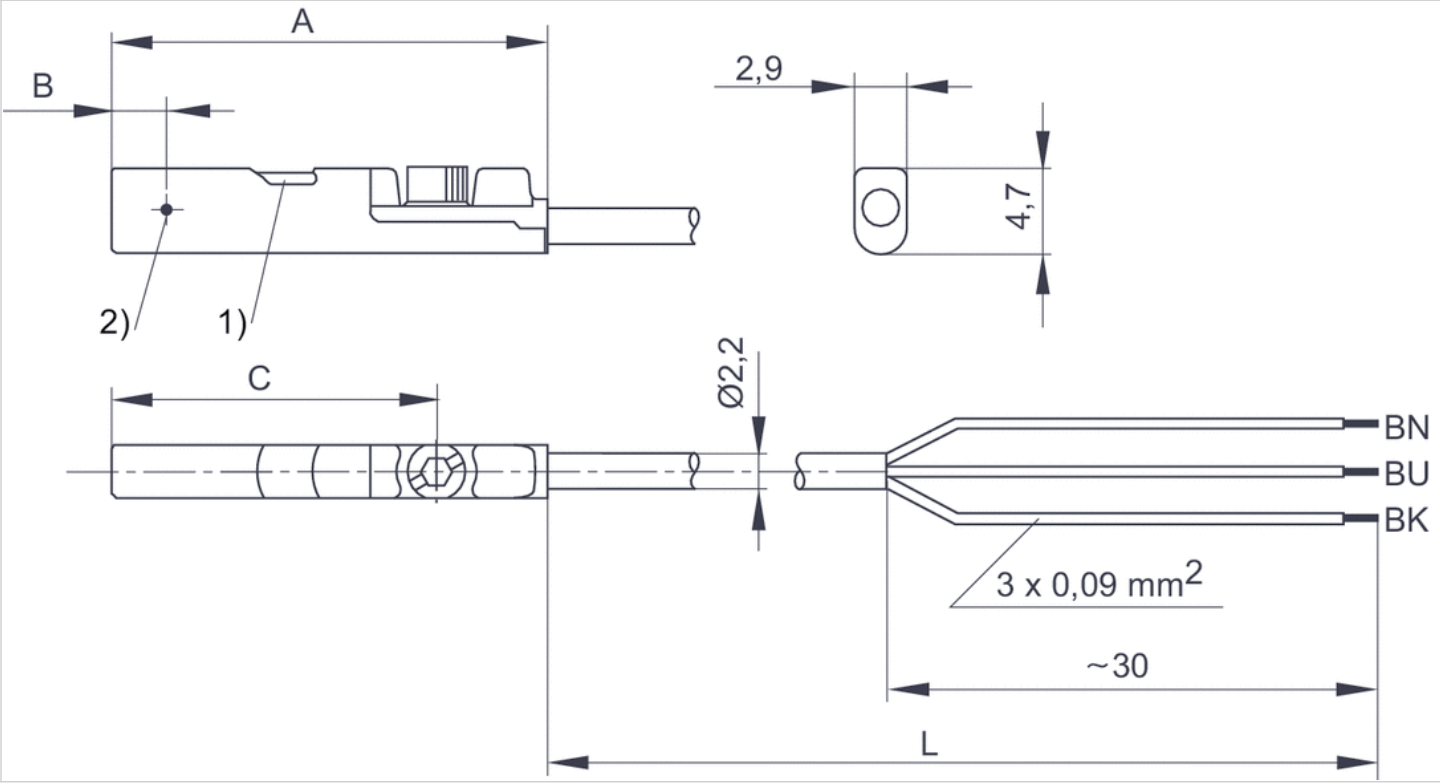

1) LED 2) Switching point
L = cable length
BN = brown, BK = black, BU = blue

Dimensions

Part No.	A	B	C
R412024124	23.7	2.8	17.7

Sensor, Series ST4

- 4 mm T-slot
- with cable
- Plug, M8, 3-pin
- UL certification
- Reed electronic PNP electronic NPN
- Direct mounting for series PRA, SSI, GSU, RTC, CKP, GSP, MSC, MSN, RCM, CVI
- Indirect mounting for series MNI, CSL-RD, ICM



Certificates	UL (Underwriters Laboratories) cULus RoHS
Ambient temperature min./max.	-30 ... 80 °C
Protection class	IP65, IP67
Switching point precision	±0,1 mT
Min./max. DC operating voltage	See table below
Switching logic	NO (make contact)
Display	LED
LED status display	Yellow
Vibration resistance	10 - 55 Hz, 1 mm
Shock resistance	30 g / 11 ms
Cable length L	0.3 m
Mounting screw	Combination: slotted and hexagon socket

Technical data

Part No.		for
R412019682		PRA, SSI, GSU, RTC, CKP, GSP, MSC, MSN, RCM, CVI
R412019683		PRA, SSI, GSU, RTC, CKP, GSP, MSC, MSN, RCM, CVI
R412019694		PRA, SSI, GSU, RTC, CKP, GSP, MSC, MSN, RCM, CVI

Part No.	Type of contact	Cable length L	Min./max. DC operating voltage
R412019682	Reed	0.3 m	5 ... 30 V DC
R412019683	electronic PNP	0.3 m	10 ... 30 V DC
R412019694	electronic NPN	0.3 m	10 ... 30 V DC

Part No.	Voltage drop U at Imax	DC switching current, max.
R412019682	≤ 0,5 V	0.13 A
R412019683	≤ 2,5 V	0.1 A
R412019694	≤ 2,5 V	0.1 A

Part No.	AC switching current, max.	Switching capacity
R412019682	0.13 A	3 W / 3 VA
R412019683	-	-
R412019694	-	-

Part No.	Version
R412019682	Protected against polarity reversal
R412019683	short circuit resistant Protected against polarity reversal
R412019694	short circuit resistant Protected against polarity reversal

Technical information

The max. switching capacity must not be exceeded.

Technical information

Material	
Housing	Polyamide fiber-glass reinforced
Cable sheath	Polyurethane

Dimensions

Dimensions

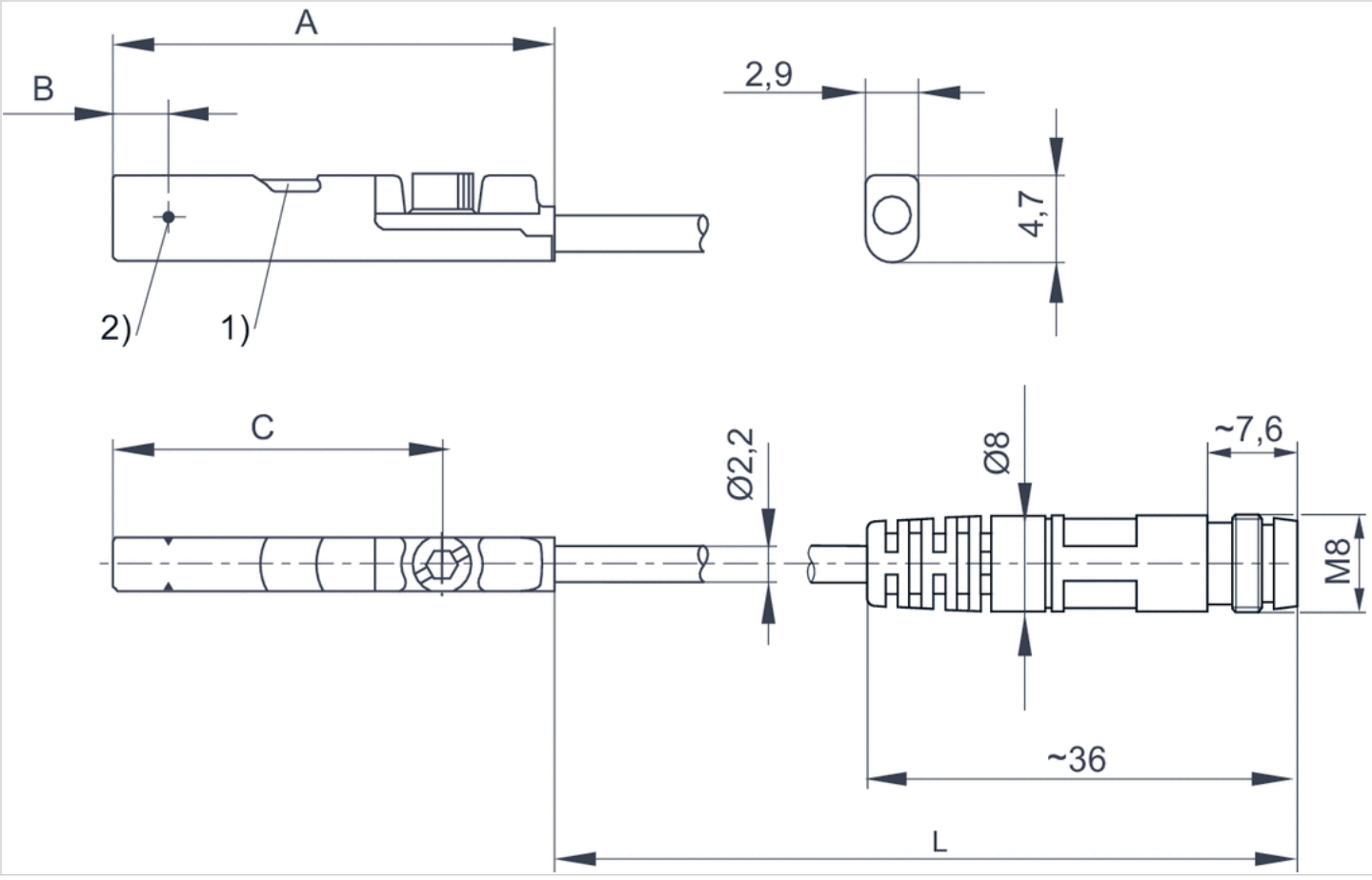

1) LED 2) Switching point
L = cable length

Dimensions

Part No.	A	B	C
R412019682	26.3	6.3	20.3
R412019683	23.7	2.8	17.7
R412019694	23.7	2.8	17.7

Pin assignments

Pin assignments

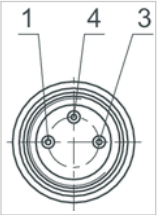

Pin	1	3	4
Allocation	(+)	(-)	(OUT)

Sensor, Series ST4

- 4 mm T-slot
- with cable
- Plug, M8, 3-pin, with knurled screw
- UL certification
- Reed electronic PNP
- Direct mounting for series PRA, SSI, GSU, RTC, CKP, GPC, MSC, MSN, RCM, CVI
- Indirect mounting for series MNI, CSL-RD, ICM



Certificates	UL (Underwriters Laboratories) cULus RoHS
Ambient temperature min./max.	-30 ... 80 °C
Protection class	IP65, IP67
Switching point precision	±0,1 mT
Min./max. DC operating voltage	See table below
Switching logic	NO (make contact)
Display	LED
LED status display	Yellow
Vibration resistance	10 - 55 Hz, 1 mm
Shock resistance	30 g / 11 ms
Cable length L	0.3 0.5 m
Mounting screw	Combination: slotted and hexagon socket

Technical data

Part No.		for
R412019490		PRA, SSI, GSU, RTC, CKP, GPC, MSC, MSN, RCM, CVI
R412019686		PRA, SSI, GSU, RTC, CKP, GPC, MSC, MSN, RCM, CVI
R412019493		PRA, SSI, GSU, RTC, CKP, GPC, MSC, MSN, RCM, CVI
R412019687		PRA, SSI, GSU, RTC, CKP, GPC, MSC, MSN, RCM, CVI

Part No.	Type of contact	Cable length L	Min./max. DC operating voltage
R412019490	Reed	0.3 m	5 ... 30 V DC
R412019686	Reed	0.5 m	5 ... 30 V DC
R412019493	electronic PNP	0.3 m	10 ... 30 V DC
R412019687	electronic PNP	0.5 m	10 ... 30 V DC

Part No.	Voltage drop U at Imax	DC switching current, max.
R412019490	≤ 0,5 V	0.13 A
R412019686	≤ 0,5 V	0.13 A
R412019493	≤ 2,5 V	0.1 A
R412019687	≤ 2,5 V	0.1 A

Part No.	AC switching current, max.	Switching capacity
R412019490	0.13 A	3 W / 3 VA

Part No.	AC switching current, max.	Switching capacity
R412019686	0.13 A	3 W / 3 VA
R412019493	-	-
R412019687	-	-

Part No.	Version
R412019490	Protected against polarity reversal
R412019686	Protected against polarity reversal
R412019493	short circuit resistant Protected against polarity reversal
R412019687	short circuit resistant Protected against polarity reversal

Technical information

The max. switching capacity must not be exceeded.

Technical information

Material	
Housing	Polyamide fiber-glass reinforced
Cable sheath	Polyurethane

Dimensions

Dimensions

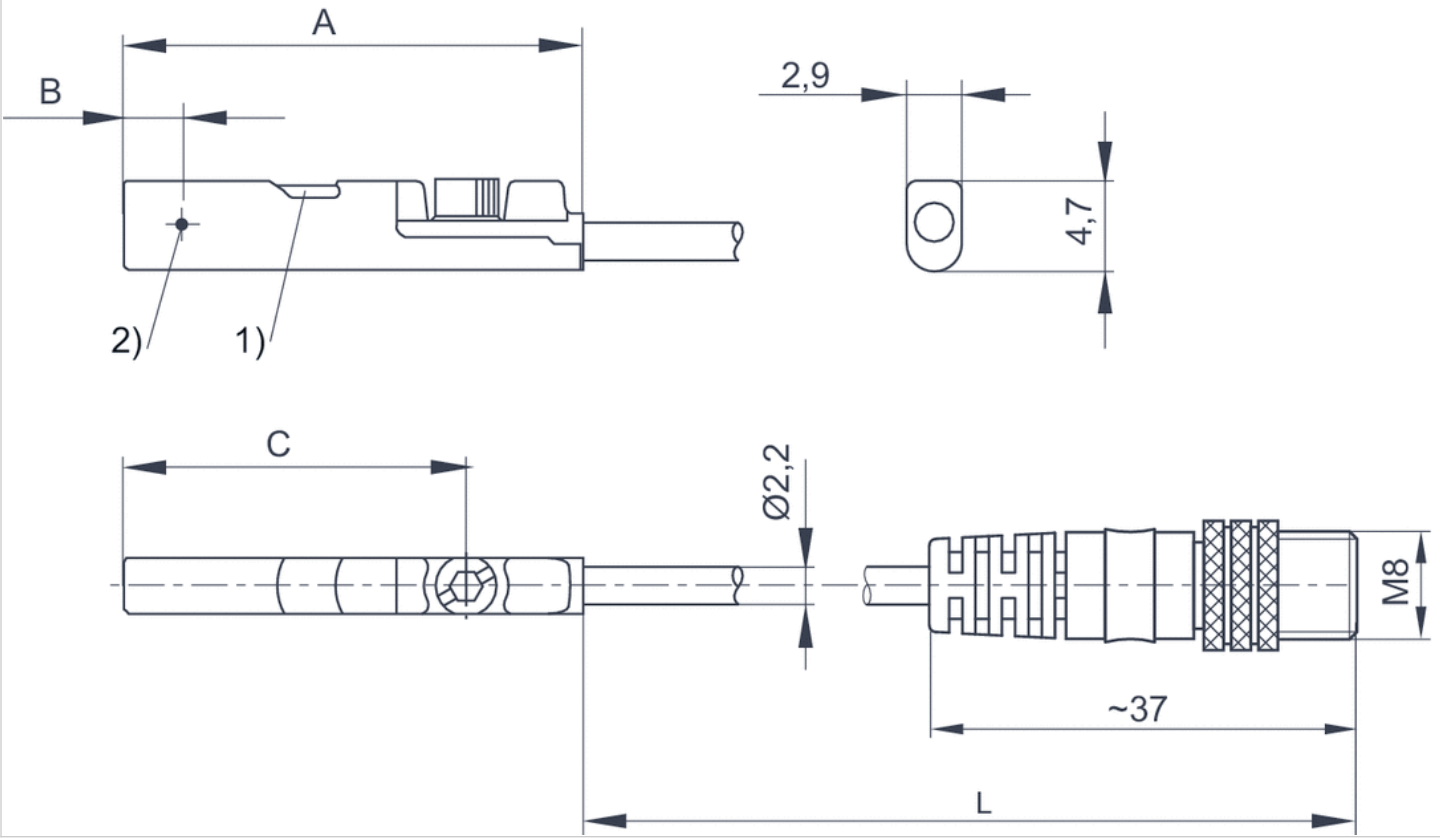

1) LED 2) Switching point
L = cable length

Dimensions

Part No.	A	B	C
R412019490	26.3	6.3	20.3
R412019686	26.3	6.3	20.3
R412019493	23.7	2.8	17.7
R412019687	23.7	2.8	17.7

Pin assignments

Pin assignments

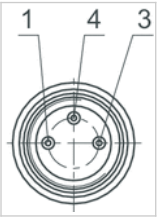

Pin	1	3	4
Allocation	(+)	(-)	(OUT)

Sensor, Series ST4

- 4 mm T-slot
- with cable
- Plug, M8, 3-pin Plug, M8, 3-pin, with knurled screw
- With stretched impulse
- With stretched impulse
- electronic NPN electronic PNP
- Direct mounting for series PRA, SSI, GSU, RTC, CKP, GPC, MSC, MSN, RCM, CVI
- Indirect mounting for series MNI, CSL-RD, ICM



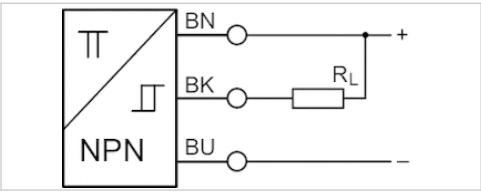

Certificates	RoHS
Ambient temperature min./max.	-30 ... 80 °C
Protection class	IP65, IP67
Switching point precision	±0,1 mT
Min./max. DC operating voltage	10 ... 30 V DC
Switching logic	NO (make contact)
Pulse stretching	20 ms
Display	LED
LED status display	Yellow
Vibration resistance	10 - 55 Hz, 1 mm
Shock resistance	30 g / 11 ms
Cable length L	0.3 m
Mounting screw	Combination: slotted and hexagon socket

Technical data

Part No.	for	Type of contact
R412024123	PRA, SSI, GSU, RTC, CKP, GPC, MSC, MSN, RCM, CVI	electronic NPN
R412024125	PRA, SSI, GSU, RTC, CKP, GPC, MSC, MSN, RCM, CVI	electronic PNP

Part No.	Cable length L	Voltage drop U at Imax	DC switching current, max.
R412024123	0.3 m	≤ 2,5 V	0.1 A
R412024125	0.3 m	≤ 2,5 V	0.1 A

Part No.	Switch signal	
R412024123	With stretched impulse	1)
R412024125	With stretched impulse	2)

1) Plug M8, 3-pin

2) Plug M8, 3-pin with knurled screw

Technical information

The max. switching capacity must not be exceeded.

Technical information

Material	
Housing	Polyamide fiber-glass reinforced
Cable sheath	Polyurethane

Dimensions

Dimensions

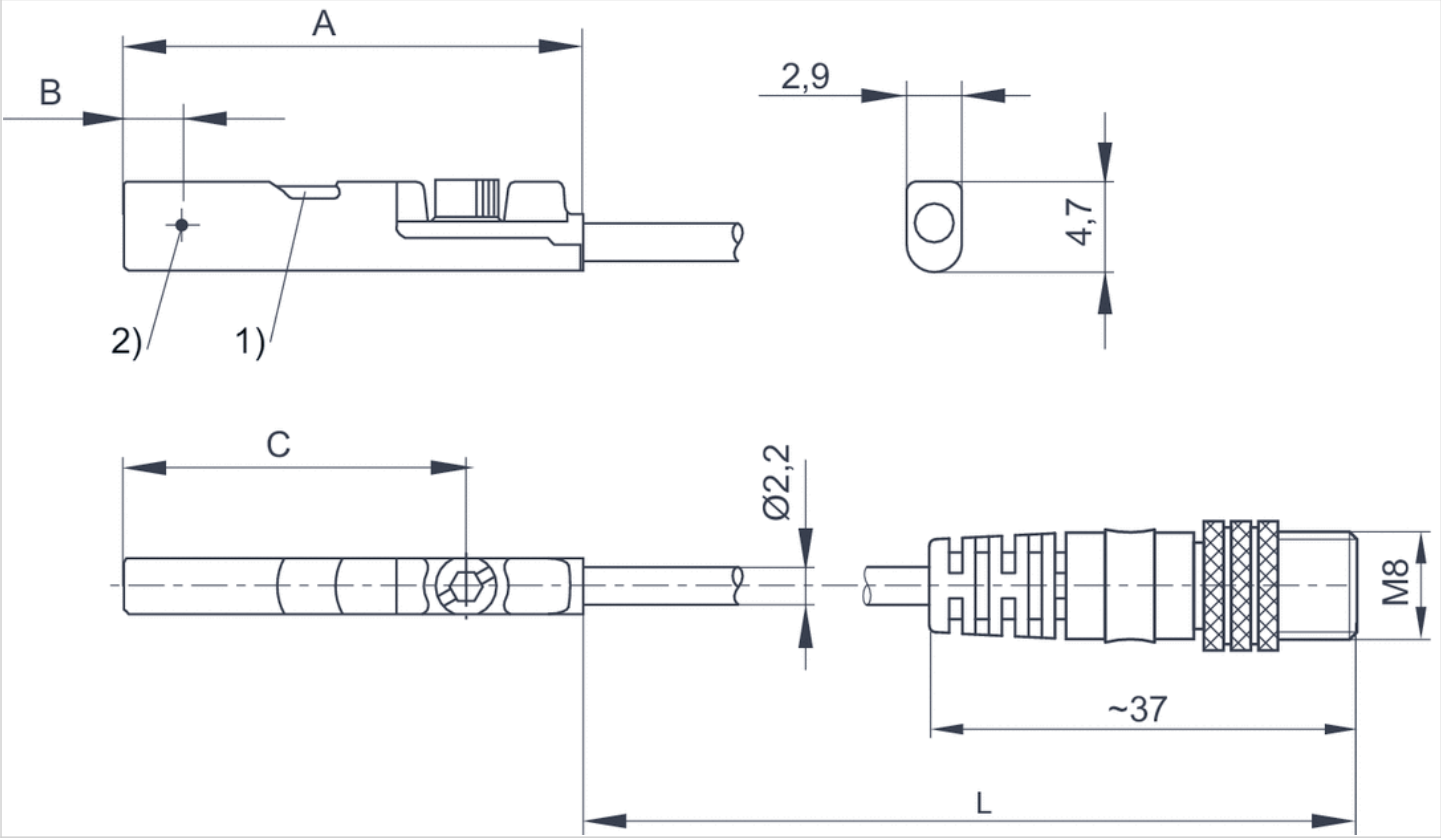

1) LED 2) Switching point
L = cable length

Pin assignments

Pin assignments

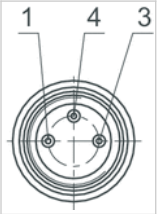

Pin	1	3	4
Allocation	(+)	(-)	(OUT)

Sensor, Series ST4

- 4 mm T-slot
- with cable
- Plug, M12, 3-pin, with knurled screw
- UL certification
- Reed electronic PNP
- Direct mounting for series PRA, SSI, GSU, RTC, CKP, GPC, MSC, MSN, RCM, CVI
- Indirect mounting for series MNI, CSL-RD, ICM



Certificates	UL (Underwriters Laboratories) cULus RoHS
Ambient temperature min./max.	-30 ... 80 °C
Protection class	IP65, IP67
Switching point precision	±0,1 mT
Min./max. DC operating voltage	See table below
Switching logic	NO (make contact)
Display	LED
LED status display	Yellow
Vibration resistance	10 - 55 Hz, 1 mm
Shock resistance	30 g / 11 ms
Cable length L	0.3 m
Mounting screw	Combination: slotted and hexagon socket

Technical data

Part No.		for
R412019688		PRA, SSI, GSU, RTC, CKP, GPC, MSC, MSN, RCM, CVI
R412019689		PRA, SSI, GSU, RTC, CKP, GPC, MSC, MSN, RCM, CVI

Part No.	Type of contact	Cable length L	Min./max. DC operating voltage
R412019688	Reed	0.3 m	5 ... 30 V DC
R412019689	electronic PNP	0.3 m	10 ... 30 V DC

Part No.	Voltage drop U at Imax	DC switching current, max.
R412019688	≤ 0,5 V	0.13 A
R412019689	≤ 2,5 V	0.1 A

Part No.	AC switching current, max.	Switching capacity
R412019688	0.13 A	3 W / 3 VA
R412019689	-	-

Part No.	Version
R412019688	Protected against polarity reversal

Part No.	Version
R412019689	short circuit resistant Protected against polarity reversal

Technical information

The max. switching capacity must not be exceeded.

Technical information

Material	
Housing	Polyamide fiber-glass reinforced
Cable sheath	Polyurethane

Dimensions

Dimensions

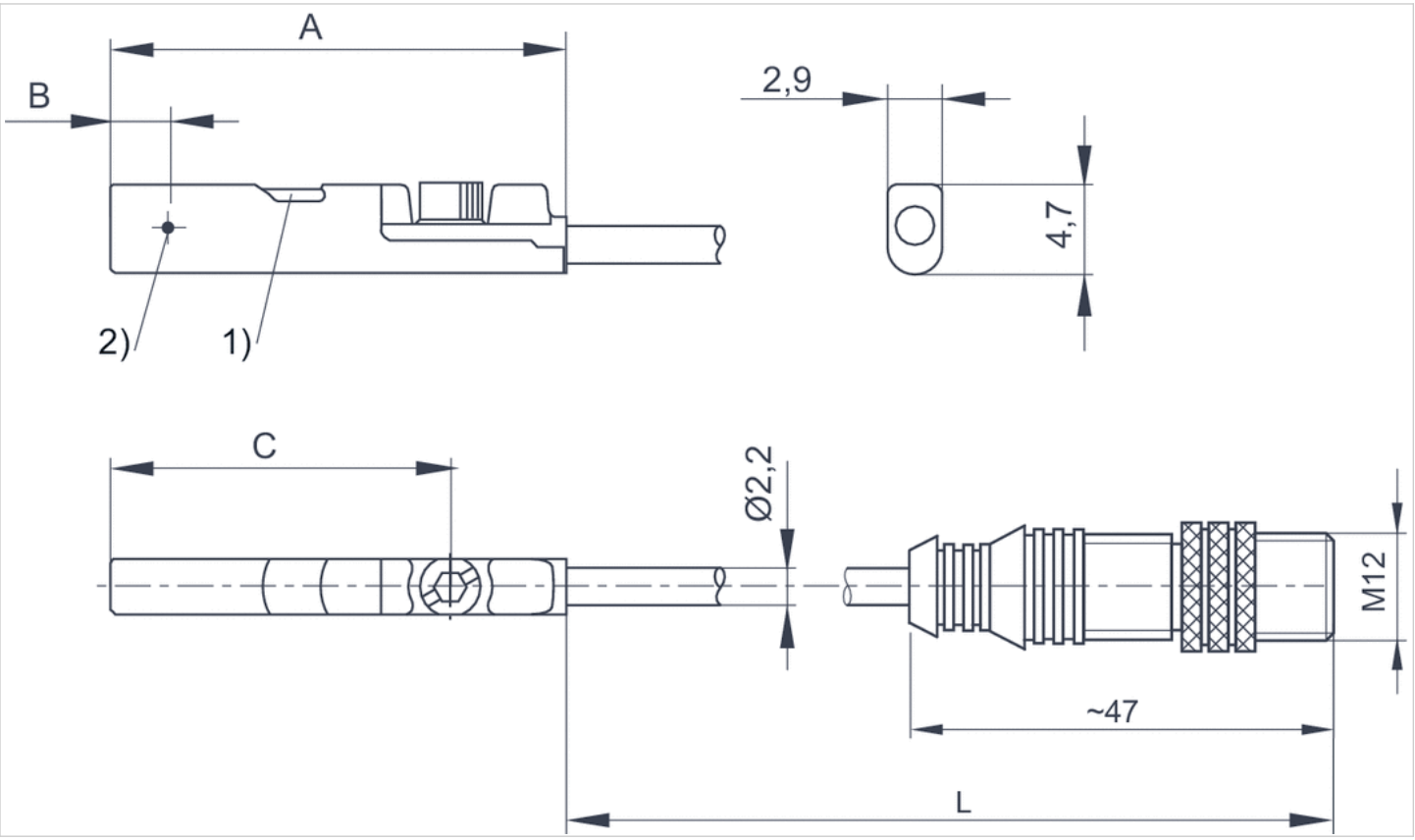

1) LED 2) Switching point
L = cable length

Dimensions

Part No.	A	B	C
R412019688	26.3	6.3	20.3
R412019689	23.7	2.8	17.7

Pin assignments

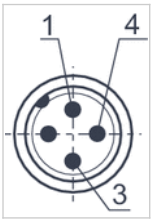

Pin	1	3	4
Allocation	(+)	(-)	(OUT)

Sensors, Series ST4-2P

- 4 mm T-slot
- number of switching points 2
- with cable
- without wire end ferrule, tin-plated, 4-pin
- electronic PNP
- 2 switching points
- electronic PNP
- Direct mounting for series PRA, SSI, RTC, GPC, MSC, MSN, RCM, CVI
- Indirect mounting for series MNI, CSL-RD, ICM



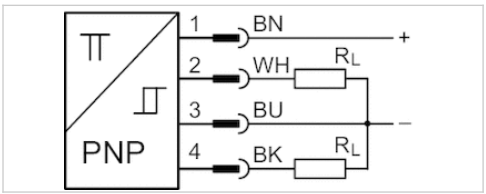

Certificates	RoHS
Ambient temperature min./max.	-20 ... 75 °C
Protection class	IP65, IP67
number of switching points	2
Power consumption	15 mA
Min./max. DC operating voltage	12 ... 30 V DC
Repetitive precision max. measuring range	0,1 mT
Hysteresis	1 mT
Switching logic	NO (make contact)
Display	LED
LED status display	Yellow
Display	2 LED
Vibration resistance	10 - 55 Hz, 1 mm
Shock resistance	30 g / 11 ms
Cable length L	2 m
Mounting screw	with hexagon socket

Technical data

Part No.	for	Type of contact	Cable length L
R412010139	PRA, SSI, RTC, GPC, MSC, MSN, RCM, CVI	electronic PNP	2 m

Part No.	Detection range max.	Voltage drop U at Imax	DC switching current, max.
R412010139	50 mm	≤ 2,2 V	0.15 A

Part No.	Function	Version
R412010139	electronic PNP	short circuit resistant Protected against polarity reversal

Technical information

Material	
Housing	Polyamide
Cable sheath	Polyurethane

Dimensions

Dimensions

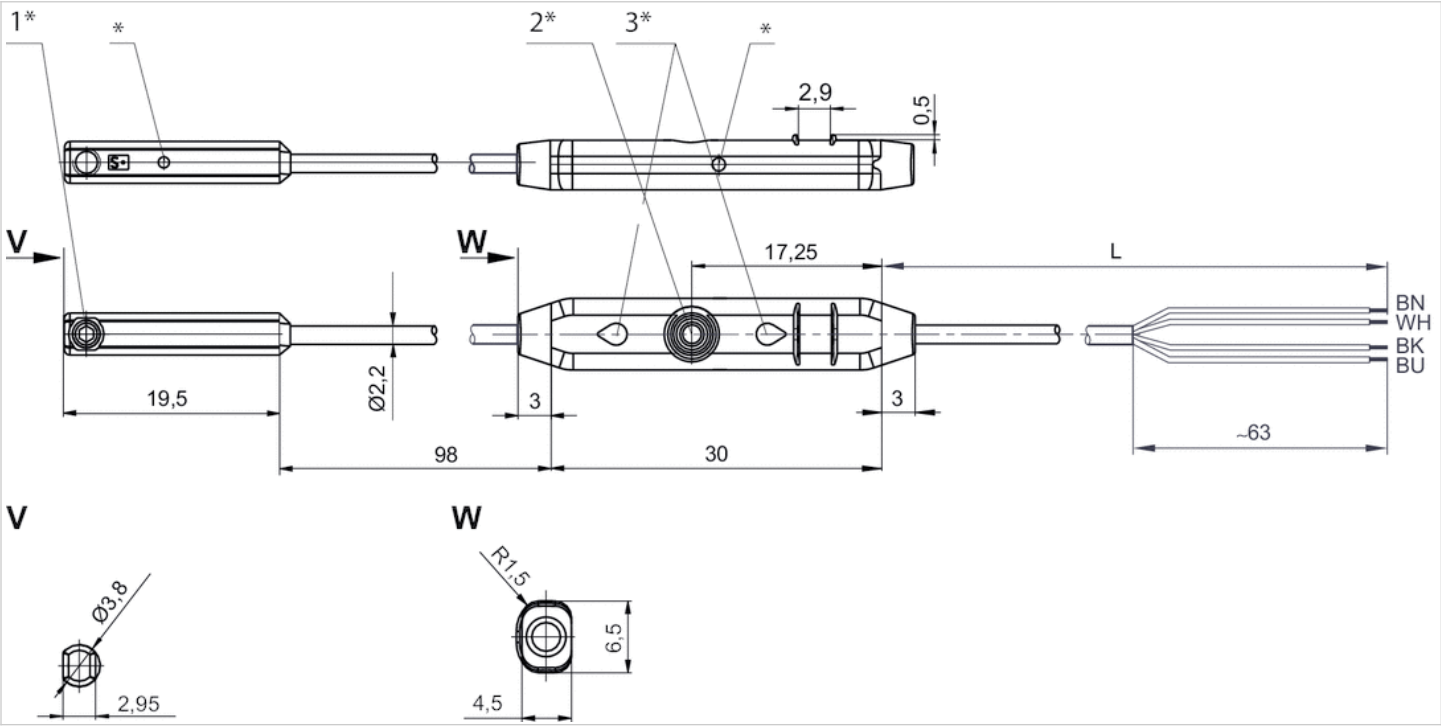

1* = mounting screw 2* = teach button 3* = LED
L = cable length
(1) BN=brown
(2) WH=white
(3) BU=blue
(4) BK=black
* Switching point

Sensors, Series ST4-2P

- 4 mm T-slot
- number of switching points 2
- with cable
- Plug, M8x1, 4-pin, with knurled screw
- electronic PNP
- 2 switching points
- electronic PNP
- Direct mounting for series PRA, SSI, RTC, GPC, MSC, MSN, RCM, CVI
- Indirect mounting for series MNI, CSL-RD, ICM



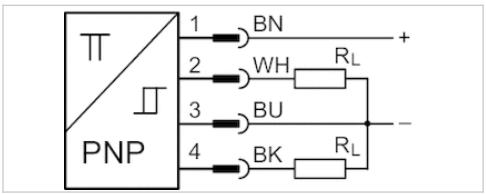

Certificates	RoHS
Ambient temperature min./max.	-20 ... 75 °C
Protection class	IP65, IP67
number of switching points	2
Power consumption	15 mA
Min./max. DC operating voltage	12 ... 30 V DC
Repetitive precision max. measuring range	0,1 mT
Hysteresis	1 mT
Switching logic	NO (make contact)
Display	LED
LED status display	Yellow
Display	2 LED
Vibration resistance	10 - 55 Hz, 1 mm
Shock resistance	30 g / 11 ms
Cable length L	0.3 m
Mounting screw	with hexagon socket

Technical data

Part No.	for	Type of contact	Cable length L
R412010140	PRA, SSI, RTC, GPC, MSC, MSN, RCM, CVI	electronic PNP	0.3 m

Part No.	Detection range max.	Voltage drop U at Imax	Function
R412010140	50 mm	≤ 2,2 V	electronic PNP

Part No.	Version
R412010140	short circuit resistant Protected against polarity reversal

Technical information

Material	
Housing	Polyamide
Cable sheath	Polyurethane

Dimensions

Dimensions

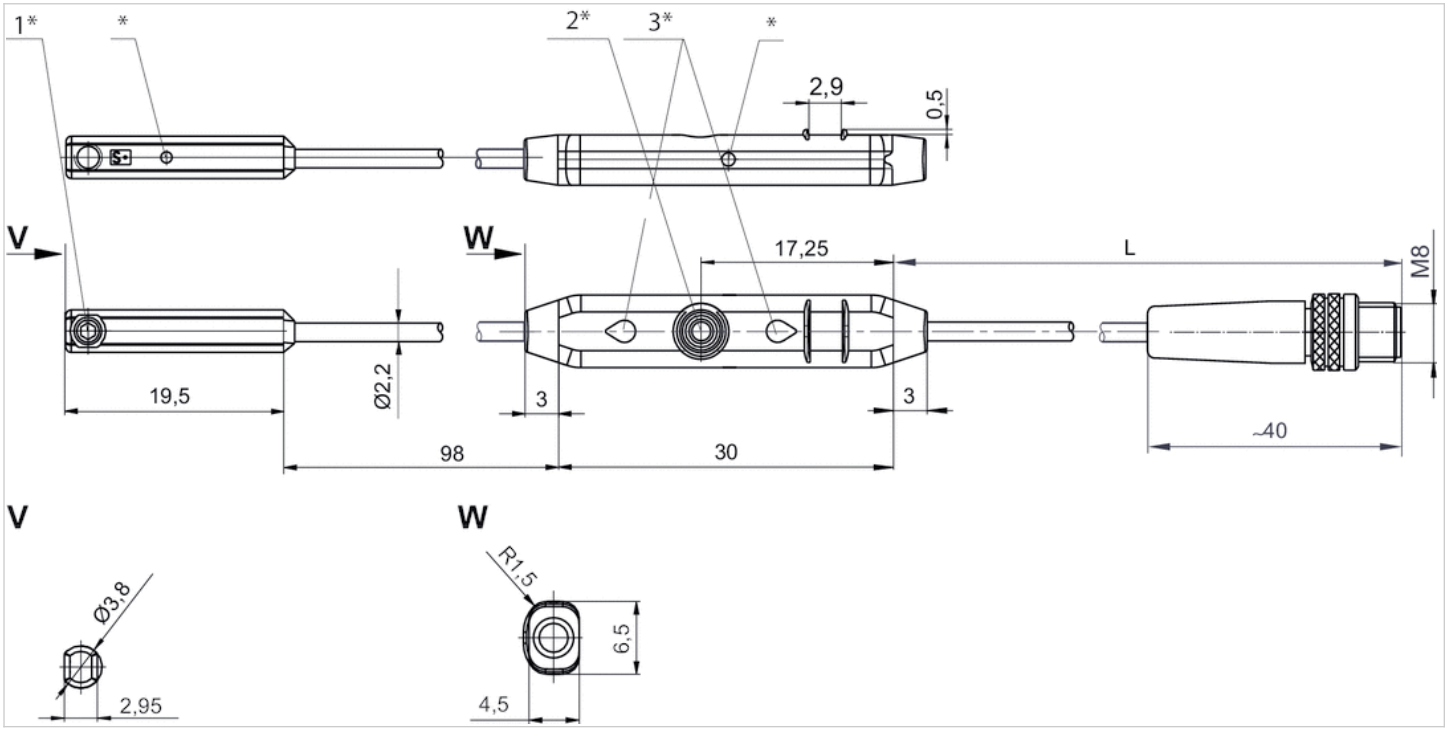

1* = mounting screw 2* = teach button 3* = LED
L = cable length
* Switching point

Pin assignments

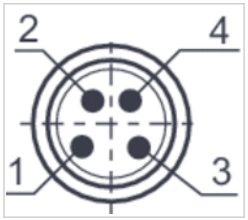

Pin	1	2	3	4
Allocation	(+)	(OUT)	(-)	(OUT)

Sensors, Series ST4-2P

- 4 mm T-slot
- number of switching points 2
- with cable
- Plug, M12x1, 4-pin, with knurled screw
- IO-Link, 2 switching points
- electronic PNP
- Direct mounting for series PRA, SSI, RTC, GPC, MSC, MSN, RCM, CVI
- Indirect mounting for series MNI, CSL-RD, ICM



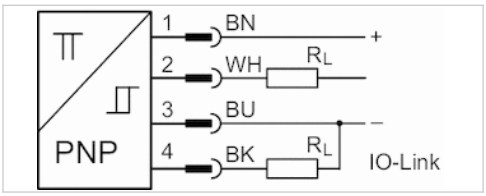

Certificates	RoHS
Ambient temperature min./max.	-20 ... 75 °C
Protection class	IP67
number of switching points	2
Power consumption	15 mA
Min./max. DC operating voltage	12 ... 30 V DC
Repetitive precision max. measuring range	0,1 mT
Hysteresis	1 mT
Switching logic	NO (make contact)
LED status display	Yellow
Display	2 LED
Vibration resistance	10 - 55 Hz, 1 mm
Shock resistance	30 g / 11 ms
Cable length L	0.3 m
Mounting screw	with hexagon socket

Technical data

Part No.	for	Type of contact	Cable length L
R412023459	PRA, SSI, RTC, GPC, MSC, MSN, RCM, CVI	electronic PNP	0.3 m

Part No.	Detection range max.	Voltage drop U at Imax
R412023459	50 mm	≤ 2,2 V

Part No.	Version
R412023459	Wire break protection Short circuit resistance Reverse polarity protection Switch-on pulse suppression

Technical information

The IO-Link device description (IODD) for the ST4-2P proximity sensor is available for download in the Media Centre.

Technical information

Material	
Housing	Polyamide
Cable sheath	Polyurethane

Dimensions

Dimensions

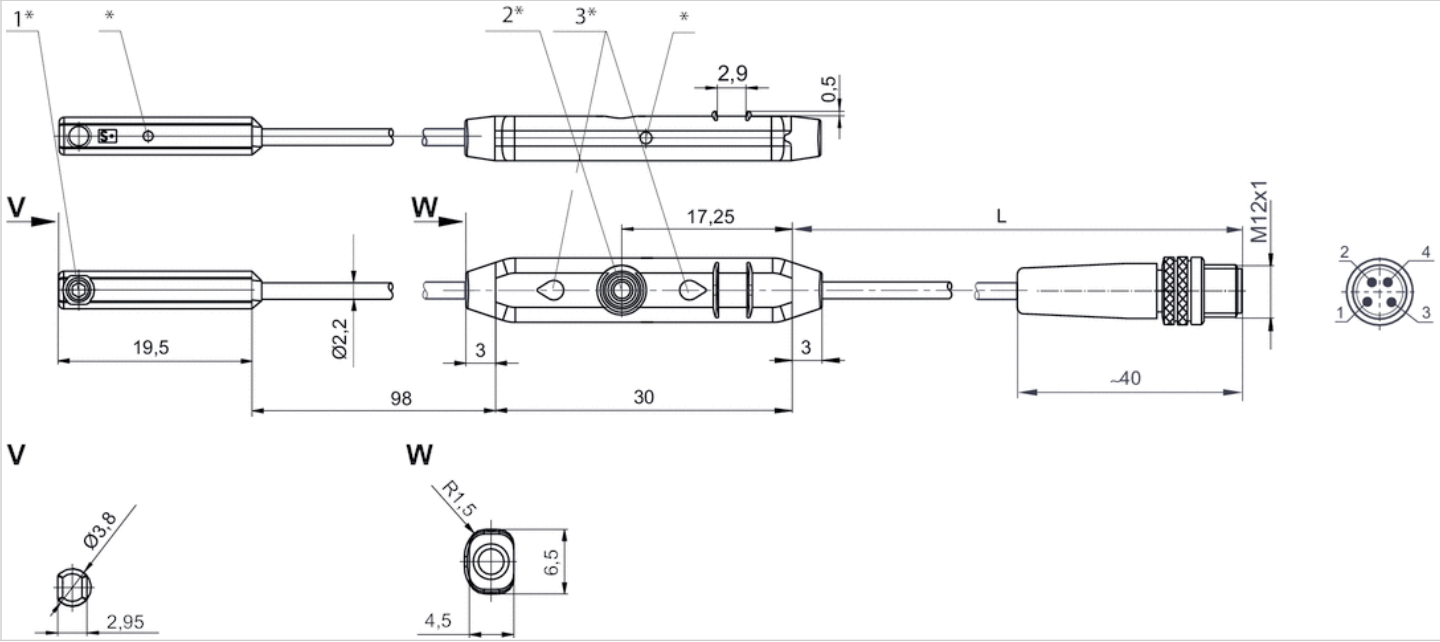

1* = mounting screw 2* = teach button 3* = LED
L = cable length
PIN assignment: 1 = (+), 2 = (OUT), 3 = (-), 4 = (OUT) IO-Link
* Switching point

Pin assignments

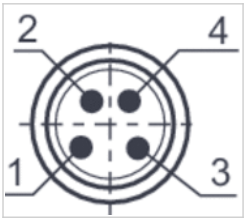

Pin	1	2	3	4
Allocation	(+)	(OUT)	(-)	IO-Link (OUT)

Sensor, Series ST6

- 6 mm T-slot
- with cable
- open cable ends, 2-pin open cable ends, 3-pin
- UL certification
- Reed electronic PNP electronic NPN
- Direct mounting for series PRA, PRE, CCI, KPZ, SSI, GPC, CVI
- Indirect mounting for series TRB, ITS, CCL-IS, MNI, CSL-RD, RPC, ICS-D2, ICM, KHZ, TRR



Ambient temperature min./max.	-30 ... 80 °C
Protection class	IP65, IP67, IP69K
Switching point precision	±0,1 mT
Nominal current, actuated state	30 mA
Quiescent current (without load)	8 mA
Min./max. DC operating voltage	See table below
Min./max. AC operating voltage	See table below
Hysteresis	≥ 0,2 mT
Switching logic	NO (make contact)
LED status display	Yellow
Vibration resistance	10 - 55 Hz, 1 mm
Shock resistance	30 g / 11 ms
Cable length L	3 5 10 m

Technical data

Part No.		for	Type of contact
R412022866		PRA, PRE, CCI, KPZ, SSI, GPC, CVI	Reed
R412027170		PRA, PRE, CCI, KPZ, SSI, GPC, CVI	Reed
R412022869		PRA, PRE, CCI, KPZ, SSI, GPC, CVI	Reed
R412022870		PRA, PRE, CCI, KPZ, SSI, GPC, CVI	Reed
R412022871		PRA, PRE, CCI, KPZ, SSI, GPC, CVI	Reed
R412022853		PRA, PRE, CCI, KPZ, SSI, GPC, CVI	electronic PNP
R412022855		PRA, PRE, CCI, KPZ, SSI, GPC, CVI	electronic PNP
R412022857		PRA, PRE, CCI, KPZ, SSI, GPC, CVI	electronic PNP
R412022849		PRA, PRE, CCI, KPZ, SSI, GPC, CVI	electronic NPN
R412022850		PRA, PRE, CCI, KPZ, SSI, GPC, CVI	electronic NPN

Part No.	Cable length L	Min./max. DC operating voltage	Min./max. AC operating voltage
R412022866	3 m	10 ... 230 V DC	10 ... 230 V AC
R412027170	5 m	10 ... 230 V DC	10 ... 230 V AC
R412022869	3 m	10 ... 30 V DC	10 ... 30 V AC
R412022870	5 m	10 ... 30 V DC	10 ... 30 V AC
R412022871	10 m	10 ... 30 V DC	10 ... 30 V AC
R412022853	3 m	10 ... 30 V DC	-
R412022855	5 m	10 ... 30 V DC	-
R412022857	10 m	10 ... 30 V DC	-
R412022849	3 m	10 ... 30 V DC	-
R412022850	5 m	10 ... 30 V DC	-

Part No.	Voltage drop U at Imax	DC switching current, max.
R412022866	≤ 3,5 V	0.13 A
R412027170	≤ 3,5 V	0.13 A
R412022869	I*Rs	0.3 A
R412022870	≤ 0,1 V	0.3 A
R412022871	I*Rs	0.3 A
R412022853	≤ 2,5 V	0.13 A
R412022855	≤ 2,5 V	0.13 A
R412022857	≤ 2,5 V	0.13 A
R412022849	≤ 2,5 V	0.13 A
R412022850	≤ 2,5 V	0.13 A

Part No.	AC switching current, max.	Switching capacity
R412022866	0.13 A	Reed, 2-pin: max. 10 W
R412027170	0.13 A	Reed, 2-pin: max. 10 W
R412022869	0.5 A	Reed, 3-pin: max. 6 W
R412022870	0.5 A	Reed, 3-pin: max. 6 W
R412022871	0.5 A	Reed, 3-pin: max. 6 W

Part No.	AC switching current, max.	Switching capacity
R412022853	-	-
R412022855	-	-
R412022857	-	-
R412022849	-	-
R412022850	-	-

Part No.	Max. switching frequency	Operating current, not switched
R412022866	400 Hz	-
R412027170	400 Hz	-
R412022869	400 Hz	-
R412022870	400 Hz	-
R412022871	400 Hz	-
R412022853	1000 Hz	8 mA
R412022855	1000 Hz	8 mA
R412022857	1000 Hz	8 mA
R412022849	1000 Hz	8 mA
R412022850	1000 Hz	8 mA

Part No.	Operating current, switched
R412022866	-
R412027170	-
R412022869	-
R412022870	-
R412022871	-
R412022853	30 mA
R412022855	30 mA
R412022857	30 mA
R412022849	30 mA
R412022850	30 mA

Part No.	Version	Fig.	
R412022866	Protected against polarity reversal	Fig. 1	1)
R412027170	Protected against polarity reversal	Fig. 1	1)
R412022869	Protected against polarity reversal	Fig. 2	2)
R412022870	Protected against polarity reversal	Fig. 2	2)
R412022871	Protected against polarity reversal	Fig. 2	2)
R412022853	short circuit resistant Protected against polarity reversal	Fig. 2	3)
R412022855	short circuit resistant Protected against polarity reversal	Fig. 2	3)
R412022857	short circuit resistant Protected against polarity reversal	Fig. 2	3)
R412022849	short circuit resistant Protected against polarity reversal	Fig. 2	3)
R412022850	short circuit resistant Protected against polarity reversal	Fig. 2	3)

1) open cable ends 2-pin The product of operating voltage and continuous current must not exceed the maximum switching capacity.

2) open cable ends 3-pin The product of operating voltage and continuous current must not exceed the maximum switching capacity.

3) open cable ends 3-pin

Technical information

No cULus certification for 230 V variant.

Technical information

Material	
Housing	Polyamide
Cable sheath	Polyurethane
Locking screw	Stainless steel

Dimensions

Fig. 1

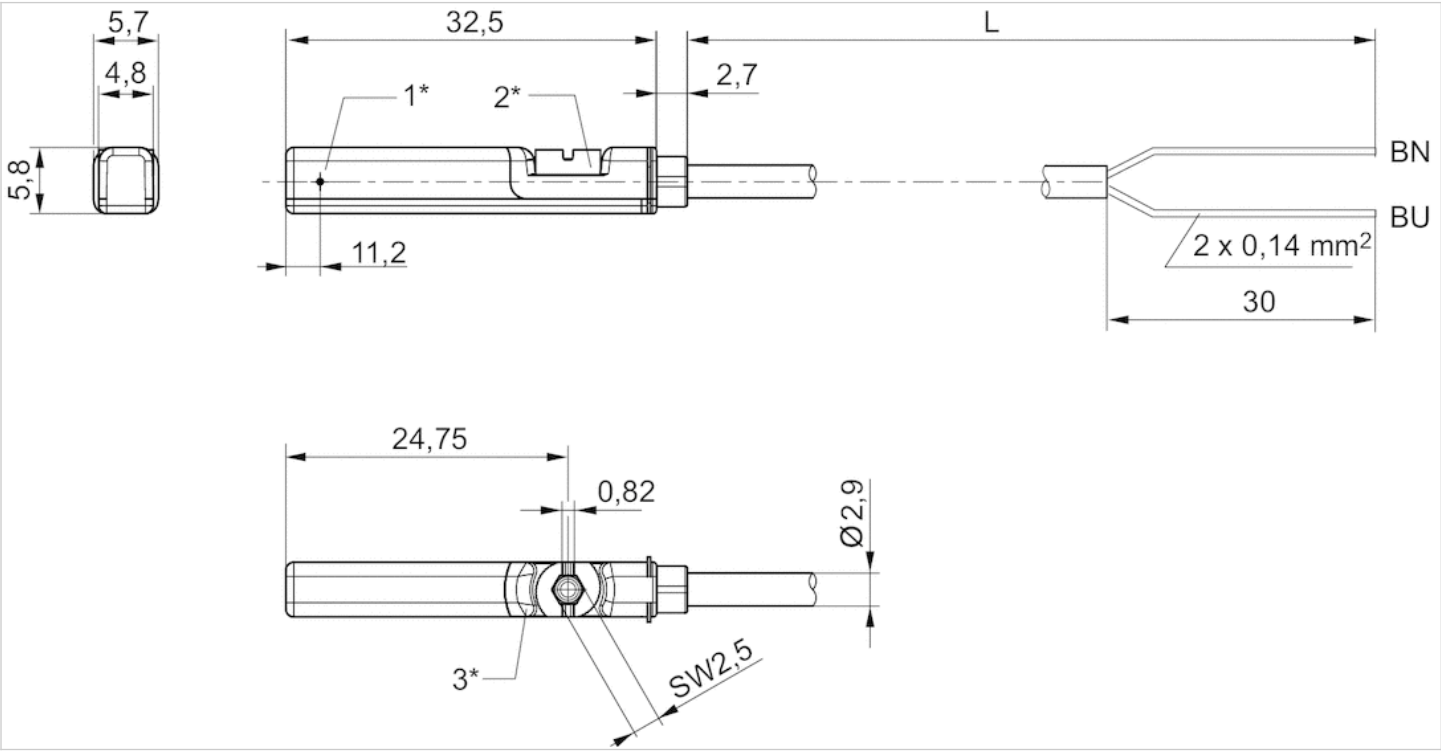

1* = switching point 2* = locking screw 3* = LED window, transparent
L = cable length
BN=brown, BU=blue

Fig. 2

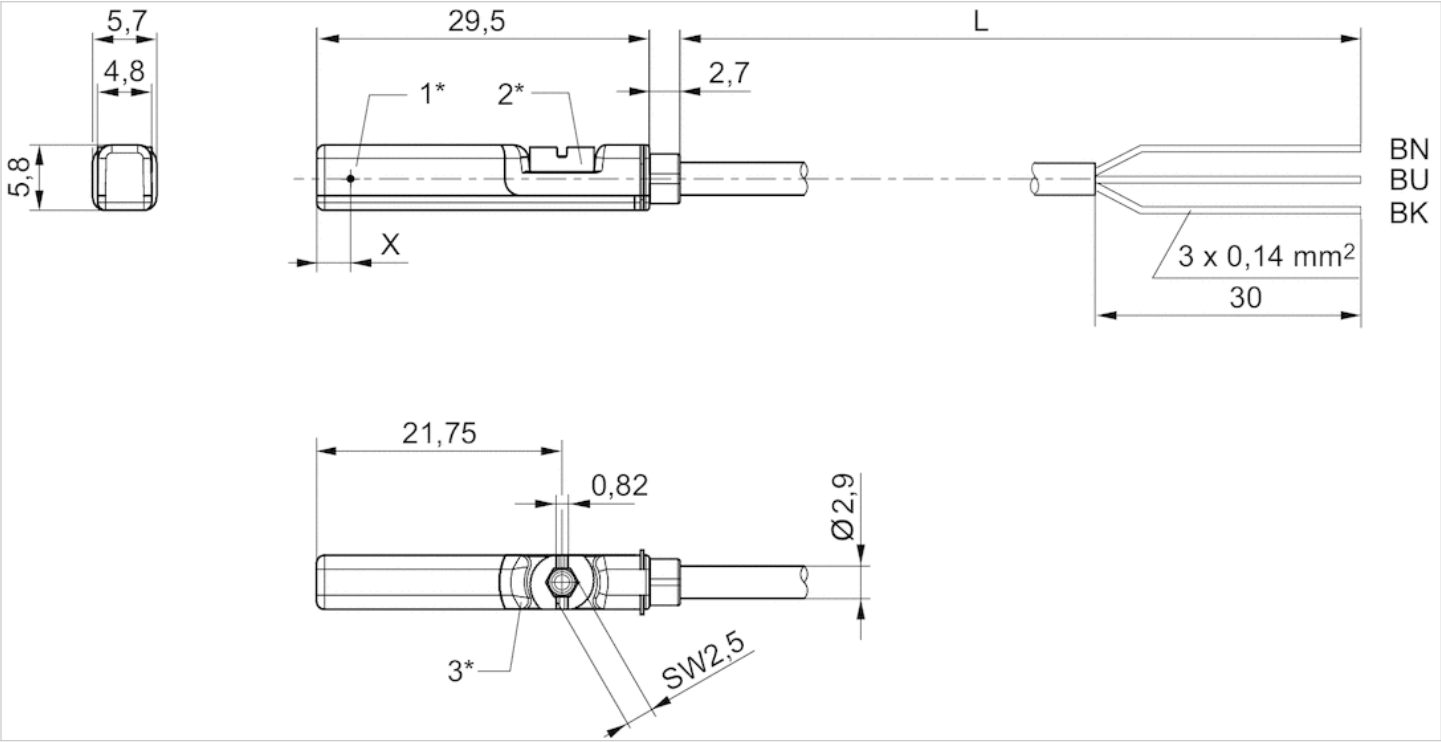

1* = switching point 2* = locking screw 3* = LED window, transparent
L = cable length
BN = brown, BK = black, BU = blue
X = electronic: 11.6 mm

Sensor, Series ST6

- 6 mm T-slot
- with cable
- open cable ends, 3-pin
- ATEX
- UL certification, ATEX
- electronic PNP
- Direct mounting for series PRA, PRE, CCI, KPZ, SSI, GPC, CVI
- Indirect mounting for series TRB, ITS, CCL-IS, MNI, CSL-RD, RPC, ICS-D2, ICM, KHZ, TRR



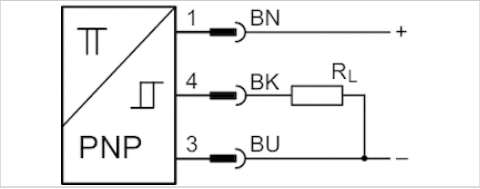

Certificates	ATEX CE declaration of conformity cULus RoHS
ATEX class G	II 3G Ex nA IIC T4 Gc X
ATEX class D	II 3D Ex tc IIIC T135°C Dc X
Ambient temperature min./max.	-20 ... 50 °C
Protection class	IP67
Switching point precision	±0,1 mT
Quiescent current (without load)	10 mA
Min./max. DC operating voltage	10 ... 30 V DC
Switching logic	NO (make contact)
LED status display	Yellow
Vibration resistance	10 - 55 Hz, 1 mm
Shock resistance	30 g / 11 ms
Cable length L	3 5 m

Technical data

Part No.	for	Type of contact	Cable length L
R412022854	PRA, PRE, CCI, KPZ, SSI, GPC, CVI	electronic PNP	3 m
R412022856	PRA, PRE, CCI, KPZ, SSI, GPC, CVI	electronic PNP	5 m

Part No.	Voltage drop U at Imax	DC switching current, max.
R412022854	≤ 2,5 V	0.1 A
R412022856	≤ 2,5 V	0.1 A

Part No.	Max. switching frequency
R412022854	1000 Hz
R412022856	1000 Hz

Part No.	Version
R412022854	short circuit resistant Protected against polarity reversal

Part No.	Version
R412022856	short circuit resistant Protected against polarity reversal

Technical information

Material	
Housing	Polyamide
Cable sheath	Polyurethane
Locking screw	Stainless steel

Dimensions

Fig. 2

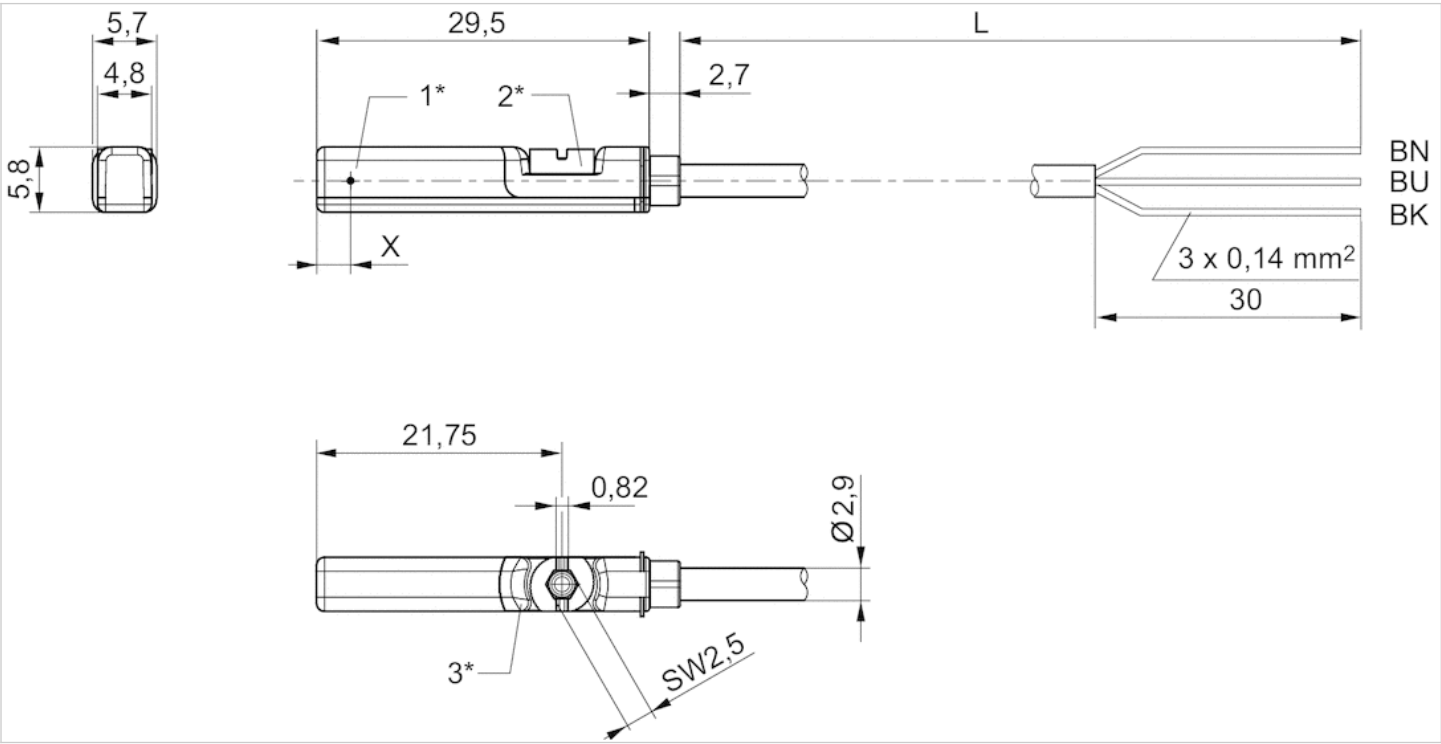

1* = switching point 2* = locking screw 3* = LED window, transparent
L = cable length
BN = brown, BK = black, BU = blue
X = electronic: 11.6 mm

Sensor, Series ST6

- 6 mm T-slot
- with cable
- Plug, M8, 3-pin, with knurled screw
- UL certification
- Reed electronic PNP electronic NPN
- Direct mounting for series PRA, PRE, CCI, KPZ, SSI, GPC, CVI
- Indirect mounting for series TRB, ITS, CCL-IS, MNI, CSL-RD, RPC, ICS-D2, ICM, KHZ, TRR



Certificates	CE declaration of conformity cULus RoHS
Ambient temperature min./max.	-30 ... 80 °C
Protection class	IP65, IP67
Switching point precision	±0,1 mT
Nominal current, actuated state	30 mA
Quiescent current (without load)	8 mA
Min./max. DC operating voltage	10 ... 30 V DC
Min./max. AC operating voltage	See table below
Hysteresis	≥ 0,2 mT
Switching logic	NO (make contact)
Switching capacity	Reed, 3-pin: max. 6 W
LED status display	Yellow
Vibration resistance	10 - 55 Hz, 1 mm
Shock resistance	30 g / 11 ms
Cable length L	0.3 0.5 m

Technical data

Part No.		for	Type of contact
R412022873		PRA, PRE, CCI, KPZ, SSI, GPC, CVI	Reed
R412022875		PRA, PRE, CCI, KPZ, SSI, GPC, CVI	Reed
R412022874		PRA, PRE, CCI, KPZ, SSI, GPC, CVI	Reed
R412022859		PRA, PRE, CCI, KPZ, SSI, GPC, CVI	electronic PNP
R412022862		PRA, PRE, CCI, KPZ, SSI, GPC, CVI	electronic PNP
R412022861		PRA, PRE, CCI, KPZ, SSI, GPC, CVI	electronic PNP
R412022852		PRA, PRE, CCI, KPZ, SSI, GPC, CVI	electronic NPN

Part No.	Cable sheath	Cable length L	Min./max. AC operating voltage
R412022873	Polyurethane	0.3 m	10 ... 30 V AC
R412022875	Polyvinyl chloride	0.3 m	10 ... 30 V AC
R412022874	Polyurethane	0.5 m	10 ... 30 V AC
R412022859	Polyurethane	0.3 m	-
R412022862	Polyvinyl chloride	0.3 m	-
R412022861	Polyurethane	0.5 m	-
R412022852	Polyurethane	0.3 m	-

Part No.	Voltage drop U at Imax	DC switching current, max.
R412022873	I*Rs	0.3 A
R412022875	I*Rs	0.3 A
R412022874	I*Rs	0.3 A
R412022859	≤ 2,5 V	0.13 A
R412022862	≤ 2,5 V	0.13 A
R412022861	≤ 2,5 V	0.13 A
R412022852	≤ 2,5 V	0.13 A

Part No.	AC switching current, max.	Max. switching frequency
R412022873	0.5 A	400 Hz
R412022875	0.5 A	400 Hz
R412022874	0.5 A	400 Hz
R412022859	-	1000 Hz
R412022862	-	1000 Hz
R412022861	-	1000 Hz
R412022852	-	1000 Hz

Part No.	Operating current, not switched	Operating current, switched
R412022873	-	-
R412022875	-	-
R412022874	-	-
R412022859	8 mA	30 mA
R412022862	8 mA	30 mA
R412022861	8 mA	30 mA
R412022852	8 mA	30 mA

Part No.	Version
R412022873	Protected against polarity reversal
R412022875	Protected against polarity reversal
R412022874	Protected against polarity reversal
R412022859	short circuit resistant Protected against polarity reversal
R412022862	short circuit resistant Protected against polarity reversal
R412022861	short circuit resistant Protected against polarity reversal
R412022852	short circuit resistant Protected against polarity reversal

Technical information

Material	
Housing	Polyamide
Cable sheath	Polyurethane Polyvinyl chloride
Locking screw	Stainless steel

Dimensions

Dimensions

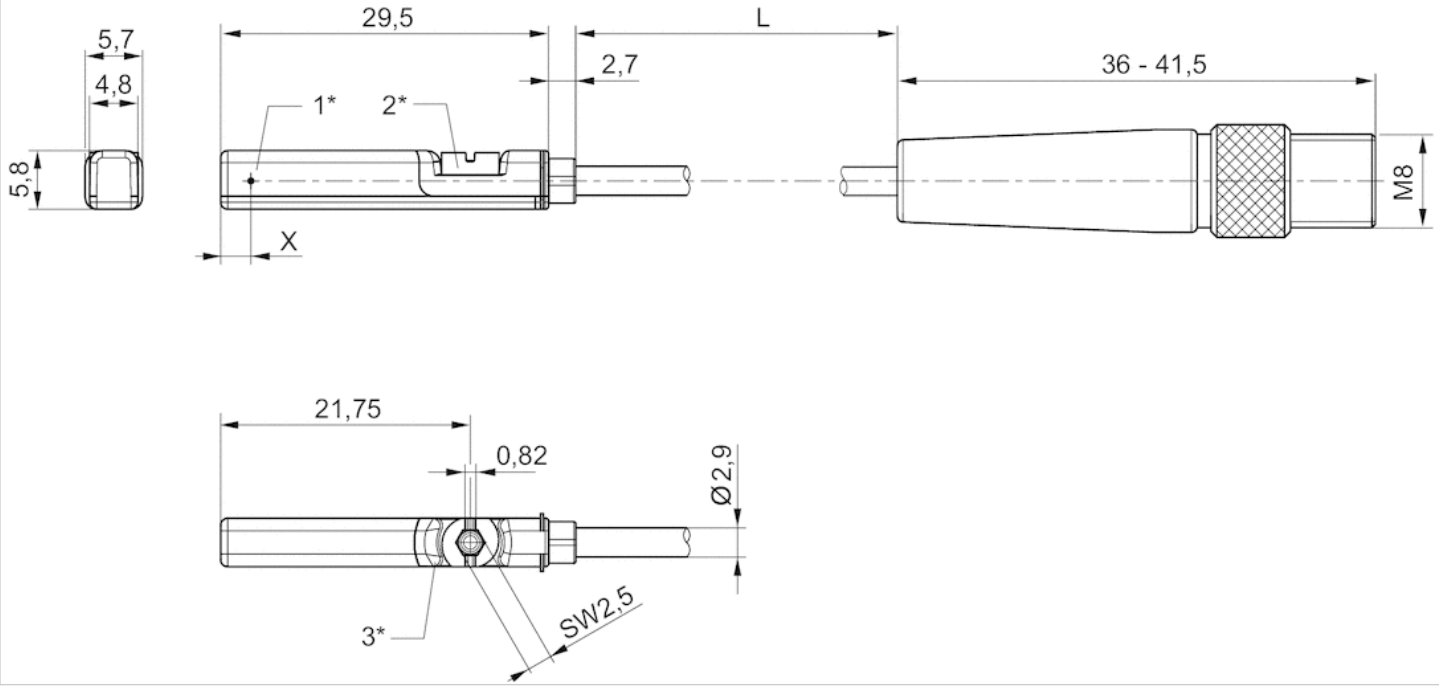

1* = switching point 2* = locking screw 3* = LED window, transparent
L = cable length
X = electronic: 11,6 mm, Reed: 8,3 mm

Pin assignments

Pin assignments

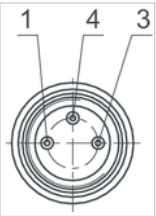

Pin	1	3	4
Allocation	(+)	(-)	(OUT)

Sensor, Series ST6

- 6 mm T-slot
- with cable
- Plug, M8, 3-pin Plug, M8, 2-pin
- UL certification
- Reed electronic PNP electronic NPN
- Direct mounting for series PRA, PRE, CCI, KPZ, SSI, GPC, CVI
- Indirect mounting for series TRB, ITS, CCL-IS, MNI, CSL-RD, RPC, ICS-D2, ICM, KHZ, TRR



Certificates	CE declaration of conformity cULus RoHS
Ambient temperature min./max.	-30 ... 80 °C
Protection class	IP65, IP67
Switching point precision	±0,1 mT
Nominal current, actuated state	30 mA
Quiescent current (without load)	8 mA
Min./max. DC operating voltage	10 ... 30 V DC
Min./max. AC operating voltage	See table below
Hysteresis	≥ 0,2 mT
Switching logic	NO (make contact)
LED status display	Yellow
Vibration resistance	10 - 55 Hz, 1 mm
Shock resistance	30 g / 11 ms
Cable length L	0.3 m

Technical data

Part No.		for	Type of contact
R412022868		PRA, PRE, CCI, KPZ, SSI, GPC, CVI	Reed
R412027172		PRA, PRE, CCI, KPZ, SSI, GPC, CVI	Reed
R412022872		PRA, PRE, CCI, KPZ, SSI, GPC, CVI	Reed
R412022858		PRA, PRE, CCI, KPZ, SSI, GPC, CVI	electronic PNP
R412022851		PRA, PRE, CCI, KPZ, SSI, GPC, CVI	electronic NPN

Part No.	Cable length L	Min./max. AC operating voltage	Voltage drop U at Imax
R412022868	0.3 m	10 ... 30 V AC	≤ 3,5 V
R412027172	0.3 m	10 ... 30 V AC	≤ 3,5 V
R412022872	0.3 m	10 ... 30 V AC	≤ 0,1 V
R412022858	0.3 m	-	≤ 2,5 V
R412022851	0.3 m	-	≤ 2,5 V

Part No.	DC switching current, max.	AC switching current, max.
R412022868	0.13 A	0.13 A
R412027172	0.13 A	0.13 A
R412022872	0.3 A	0.5 A
R412022858	0.13 A	-

Part No.	DC switching current, max.	AC switching current, max.
R412022851	0.13 A	-

Part No.	Switching capacity	Max. switching frequency
R412022868	Reed, 2-pin: max. 10 W	400 Hz
R412027172	Reed, 2-pin: max. 10 W	400 Hz
R412022872	Reed, 3-pin: max. 6 W	400 Hz
R412022858	-	1000 Hz
R412022851	-	1000 Hz

Part No.	Operating current, not switched	Operating current, switched
R412022868	-	-
R412027172	-	-
R412022872	-	-
R412022858	8 mA	30 mA
R412022851	8 mA	30 mA

Part No.	Version	
R412022868	Protected against polarity reversal	1)
R412027172	Protected against polarity reversal	1)
R412022872	Protected against polarity reversal	1)
R412022858	short circuit resistant Protected against polarity reversal	-
R412022851	short circuit resistant Protected against polarity reversal	-

1) The product of operating voltage and continuous current must not exceed the maximum switching capacity.

Technical information

Material	
Housing	Polyamide
Cable sheath	Polyurethane
Locking screw	Stainless steel

Dimensions

Dimensions

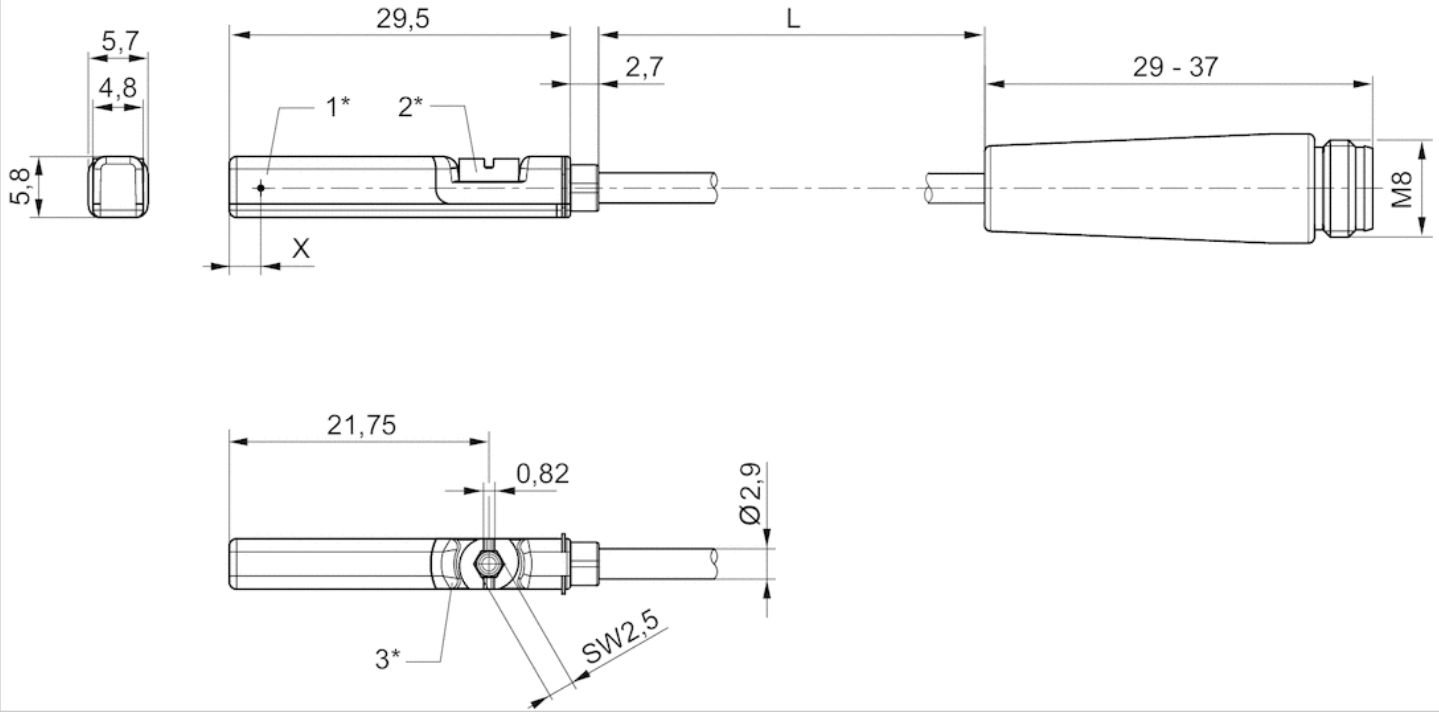

1* = switching point 2* = locking screw 3* = LED window, transparent
L = cable length
X = electronic: 11,6 mm, Reed: 8,3 mm

Sensor, Series ST6

- 6 mm T-slot
- with cable
- Plug, M8, 3-pin, with knurled screw
- ATEX
- UL certification, ATEX
- electronic PNP
- Direct mounting for series PRA, PRE, CCI, KPZ, SSI, GPC, CVI
- Indirect mounting for series TRB, ITS, CCL-IS, MNI, CSL-RD, RPC, ICS-D2, ICM, KHZ, TRR



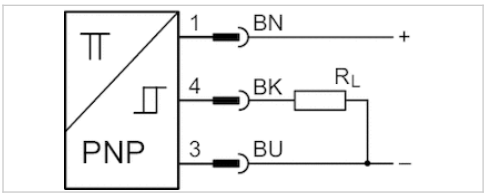

Certificates	ATEX CE declaration of conformity cULus RoHS
ATEX class G	II 3G Ex nA IIC T4 Gc X
ATEX class D	II 3D Ex tc IIIC T135°C Dc X
Ambient temperature min./max.	-20 ... 50 °C
Protection class	IP65, IP67
Switching point precision	±0,1 mT
Quiescent current (without load)	10 mA
Min./max. DC operating voltage	10 ... 30 V DC
Switching logic	NO (make contact)
LED status display	Yellow Yellow
Vibration resistance	10 - 55 Hz, 1 mm
Shock resistance	30 g / 11 ms
Cable length L	0.3 m

Technical data

Part No.	for	Type of contact	Cable length L
R412022860	PRA, PRE, CCI, KPZ, SSI, GPC, CVI	electronic PNP	0.3 m

Part No.	Voltage drop U at Imax	DC switching current, max.
R412022860	≤ 2,5 V	0.1 A

Part No.	Max. switching frequency
R412022860	1000 Hz

Part No.	Version
R412022860	short circuit resistant Protected against polarity reversal

Technical information

Material	
Housing	Polyamide
Cable sheath	Polyurethane
Locking screw	Stainless steel

Dimensions

Dimensions

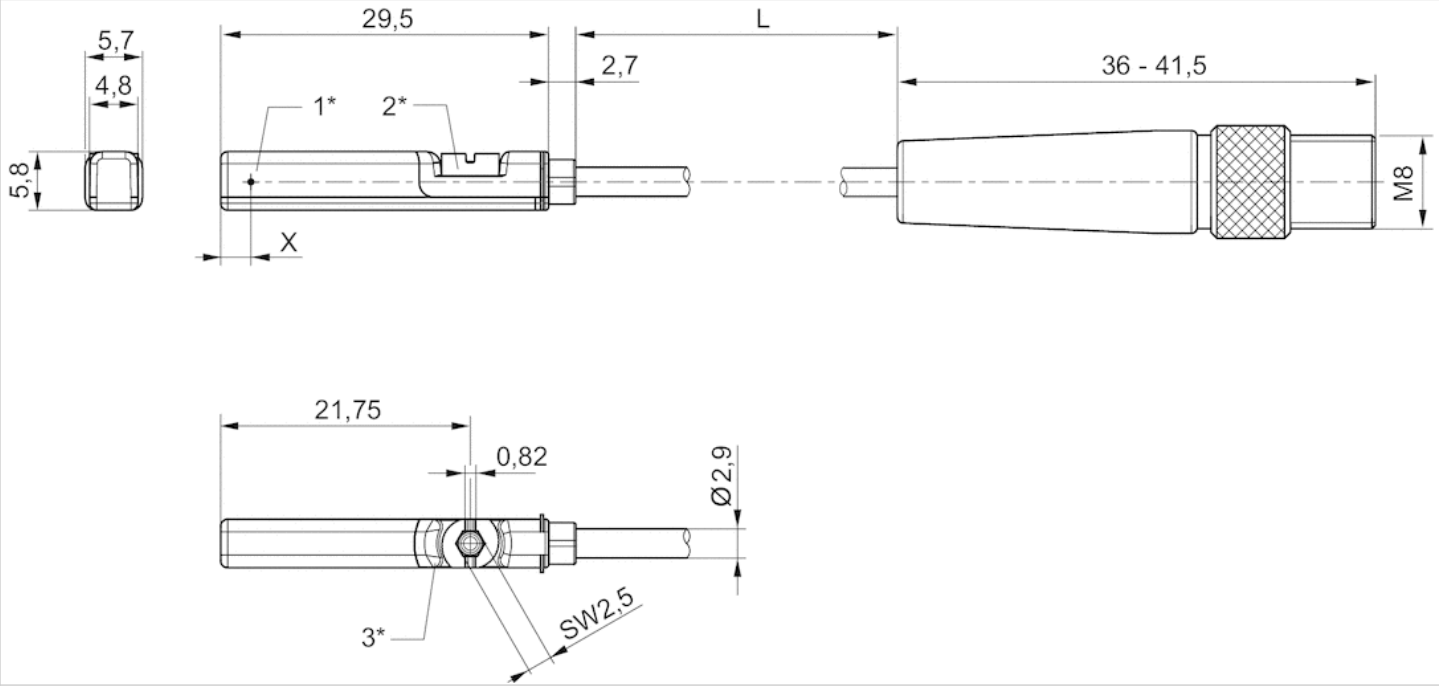

1* = switching point 2* = locking screw 3* = LED window, transparent
L = cable length
X = electronic: 11,6 mm, Reed: 8,3 mm

Pin assignments

Pin assignments

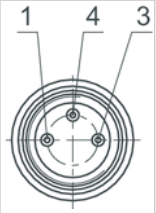

Pin	1	3	4
Allocation	(+)	(-)	(OUT)

Sensor, Series ST6

- 6 mm T-slot
- with cable
- Plug, M12, 2-pin, with knurled screw Plug, M12, 4-pin, with knurled screw
- UL certification
- Reed electronic PNP
- Direct mounting for series PRA, PRE, CCI, KPZ, SSI, GPC, CVI
- Indirect mounting for series TRB, ITS, CCL-IS, MNI, CSL-RD, RPC, ICS-D2, ICM, KHZ, TRR



Certificates	CE declaration of conformity cULus RoHS
Ambient temperature min./max.	-30 ... 80 °C
Protection class	See table below
Switching point precision	±0,1 mT
Nominal current, actuated state	30 mA
Quiescent current (without load)	8 mA
Min./max. DC operating voltage	10 ... 30 V DC
Min./max. AC operating voltage	See table below
Hysteresis	≥ 0,2 mT
Switching logic	NO (make contact)
LED status display	Yellow
Vibration resistance	10 - 55 Hz, 1 mm
Shock resistance	30 g / 11 ms
Cable length L	0.3 0.1 3 5 m

Technical data

Part No.		for	Type of contact
R412027171		PRA, PRE, CCI, KPZ, SSI, GPC, CVI	Reed
R412022876		PRA, PRE, CCI, KPZ, SSI, GPC, CVI	Reed
R412022879		PRA, PRE, CCI, KPZ, SSI, GPC, CVI	electronic PNP
R412022863		PRA, PRE, CCI, KPZ, SSI, GPC, CVI	electronic PNP
R412022877		PRA, PRE, CCI, KPZ, SSI, GPC, CVI	electronic PNP
R412022878		PRA, PRE, CCI, KPZ, SSI, GPC, CVI	electronic PNP

Part No.	Cable length L	Min./max. AC operating voltage	Voltage drop U at Imax
R412027171	0.3 m	10 ... 30 V AC	≤ 3,5 V
R412022876	0.3 m	10 ... 30 V AC	≤ 0,1 V
R412022879	0.1 m	-	≤ 2,5 V
R412022863	0.3 m	-	≤ 2,5 V
R412022877	3 m	-	≤ 2,5 V
R412022878	5 m	-	≤ 2,5 V

Part No.	DC switching current, max.	AC switching current, max.
R412027171	0.13 A	0.13 A
R412022876	0.3 A	0.5 A

Part No.	DC switching current, max.	AC switching current, max.
R412022879	0.13 A	-
R412022863	0.13 A	-
R412022877	0.13 A	-
R412022878	0.13 A	-

Part No.	Switching capacity	Max. switching frequency
R412027171	Reed, 2-pin: max. 10 W	400 Hz
R412022876	Reed, 3-pin: max. 6 W	400 Hz
R412022879	-	1000 Hz
R412022863	-	1000 Hz
R412022877	-	1000 Hz
R412022878	-	1000 Hz

Part No.	Operating current, not switched	Operating current, switched	Protection class
R412027171	-	-	IP65, IP67
R412022876	-	-	IP65, IP67
R412022879	8 mA	30 mA	IP65, IP67
R412022863	8 mA	30 mA	IP65, IP67, IP69K
R412022877	8 mA	30 mA	IP65, IP67
R412022878	8 mA	30 mA	IP65, IP67

Part No.	Version	
R412027171	Protected against polarity reversal	1)
R412022876	Protected against polarity reversal	1)
R412022879	short circuit resistant Protected against polarity reversal	-
R412022863	short circuit resistant Protected against polarity reversal	-
R412022877	short circuit resistant Protected against polarity reversal	-
R412022878	short circuit resistant Protected against polarity reversal	-

1) The product of operating voltage and continuous current must not exceed the maximum switching capacity.

Technical information

Material	
Housing	Polyamide
Cable sheath	Polyurethane
Locking screw	Stainless steel

Dimensions

Dimensions

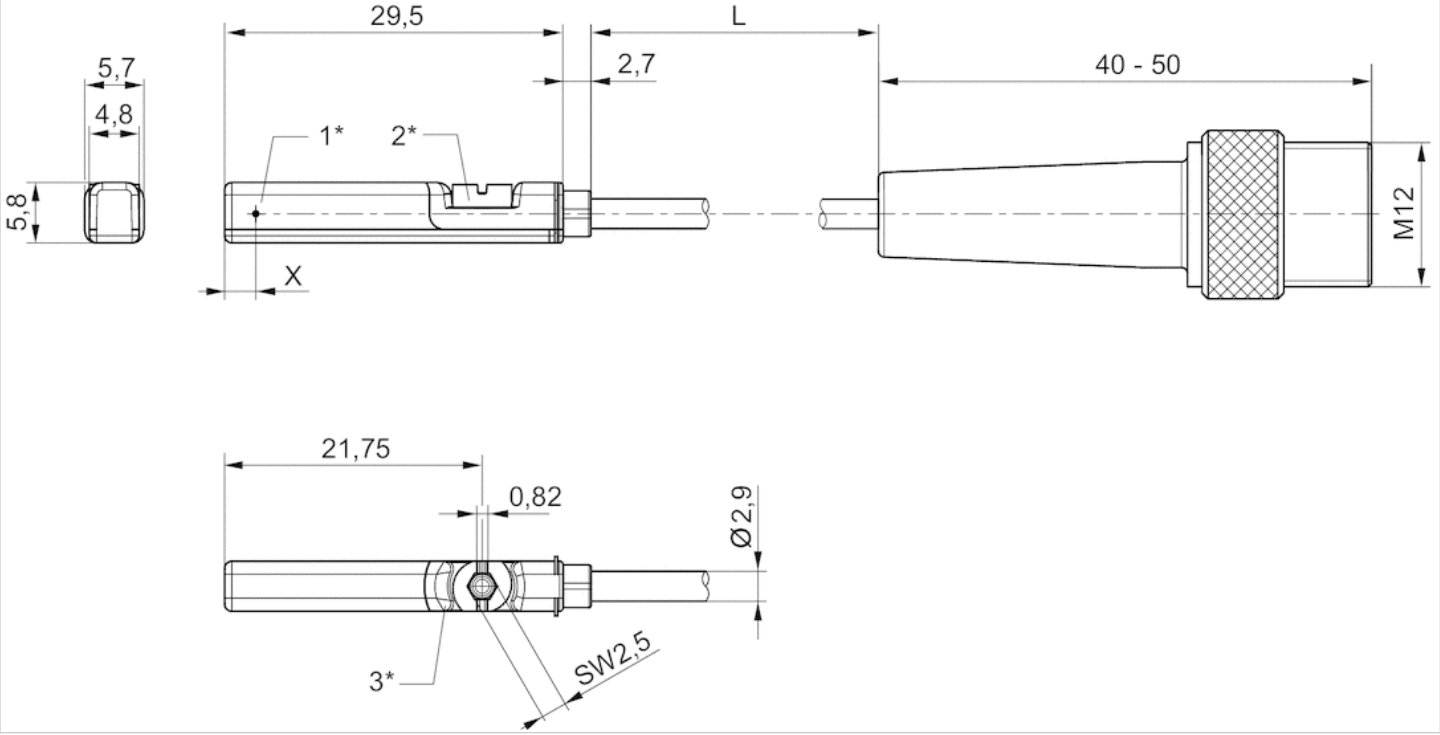

1* = switching point 2* = locking screw 3* = LED window, transparent
L = cable length
X = PNP: 11,6 mm, reed: 8,3 mm

Sensor, Series ST6

- 6 mm T-slot
- with cable
- Plug, M12, 3-pin, with knurled screw
- ATEX
- UL certification, ATEX
- electronic PNP
- Direct mounting for series PRA, PRE, CCI, KPZ, SSI, GPC, CVI
- Indirect mounting for series TRB, ITS, CCL-IS, MNI, CSL-RD, RPC, ICS-D2, ICM, KHZ, TRR



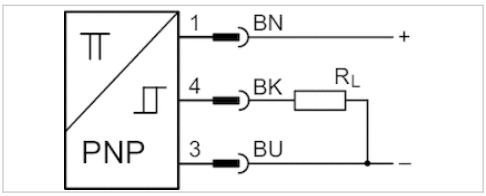

Certificates	ATEX CE declaration of conformity cULus RoHS
ATEX class G	II 3G Ex nA IIC T4 Gc X
ATEX class D	II 3D Ex tc IIIC T135°C Dc X
Ambient temperature min./max.	-20 ... 50 °C
Protection class	IP67
Switching point precision	±0,1 mT
Quiescent current (without load)	10 mA
Min./max. DC operating voltage	10 ... 30 V DC
Switching logic	NO (make contact)
LED status display	Yellow Yellow
Vibration resistance	10 - 55 Hz, 1 mm
Shock resistance	30 g / 11 ms
Cable length L	0.3 m

Technical data

Part No.	for	Type of contact	Cable length L
R412022864	PRA, PRE, CCI, KPZ, SSI, GPC, CVI	electronic PNP	0.3 m

Part No.	Voltage drop U at Imax	DC switching current, max.
R412022864	≤ 2,5 V	0.1 A

Part No.	Max. switching frequency
R412022864	1000 Hz

Part No.	Version
R412022864	short circuit resistant Protected against polarity reversal

Technical information

Material	
Housing	Polyamide
Cable sheath	Polyurethane
Locking screw	Stainless steel

Dimensions

Dimensions

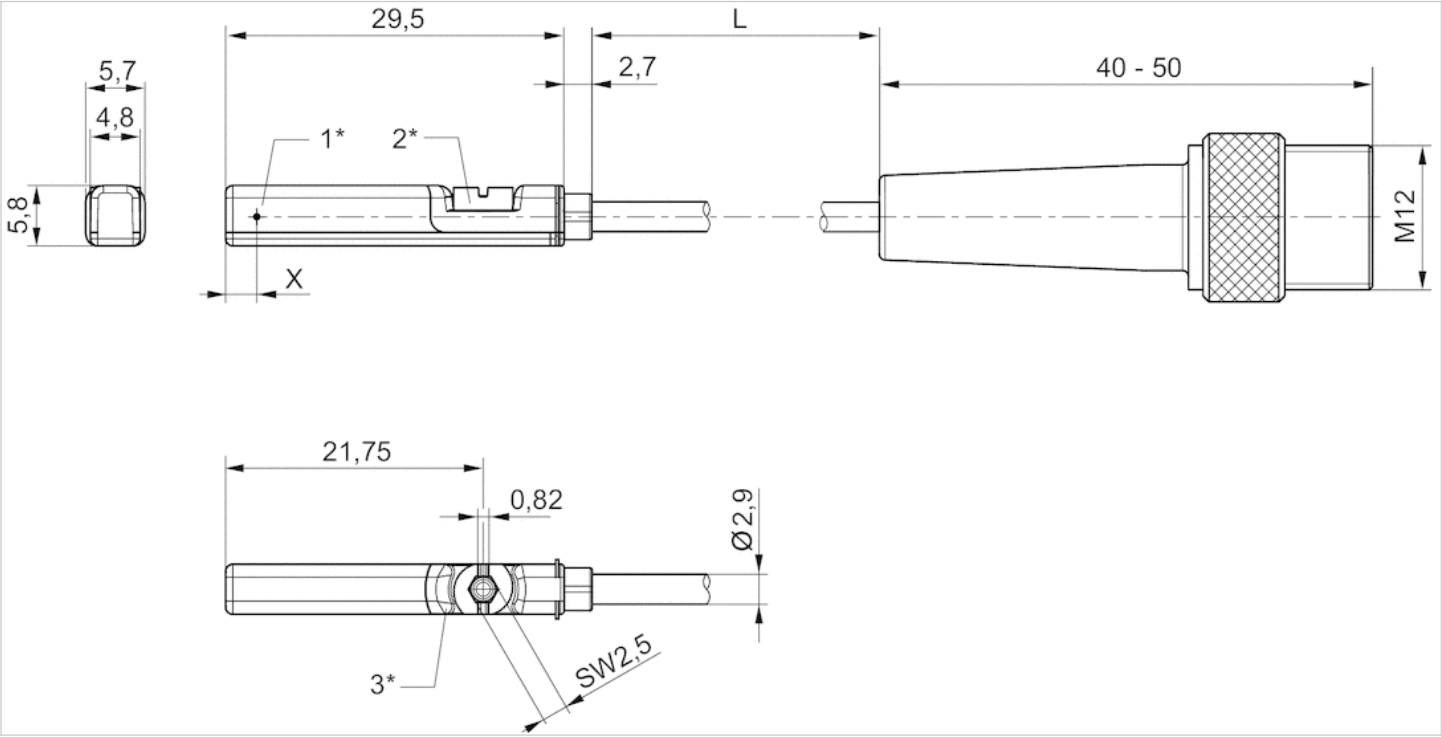

1* = switching point 2* = locking screw 3* = LED window, transparent
L = cable length
X = PNP: 11,6 mm, reed: 8,3 mm

Pin assignments

Pin assignments

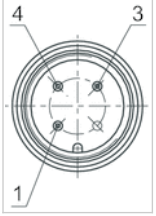

Pin	1	3	4
Allocation	(+)	(-)	(OUT)

Sensor, Series ST6-HT

- 6 mm T-slot
- with cable
- open cable ends, 2-pin
- Heat resistant
- UL certification
- Reed
- Direct mounting for series PRA, PRE, CCI, KPZ
- Indirect mounting for series TRB, ITS, CCL-IS, MNI, CSL-RD, RPC



Certificates	CE declaration of conformity RoHS
Ambient temperature min./max.	-20 ... 120 °C
Protection class	IP65, IP67
Switching point precision	±0,1 mT
Min./max. DC operating voltage	0 ... 30 V DC
Min./max. AC operating voltage	0 ... 30 V AC
Switching logic	NO (make contact)
Switching capacity	Reed, 2-pin: max. 10 W
Vibration resistance	10 - 55 Hz, 1 mm
Shock resistance	30 g / 11 ms
Cable length L	3 10 m

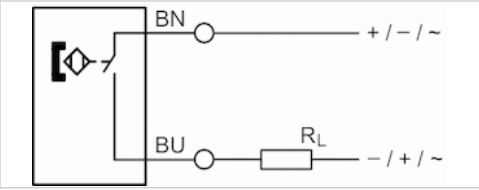

Technical data

Part No.	for	Type of contact	Cable length L	Voltage drop U at Imax
R412022865	PRA, PRE, CCI, KPZ	Reed	3 m	≤ 3,5 V
R412022867	PRA, PRE, CCI, KPZ	Reed	10 m	≤ 3,5 V

Part No.	DC switching current, max.	AC switching current, max.
R412022865	0.13 A	0.13 A
R412022867	0.13 A	0.13 A

Part No.	Max. switching frequency	Version
R412022865	400 Hz	Protected against polarity reversal
R412022867	400 Hz	Protected against polarity reversal

Part No.	Temperature resistance
R412022865	Heat resistant

Part No.	Temperature resistance
R412022867	Heat resistant

Technical information

Material	
Housing	Polyamide
Cable sheath	Polyurethane
Locking screw	Stainless steel

Dimensions

Dimensions

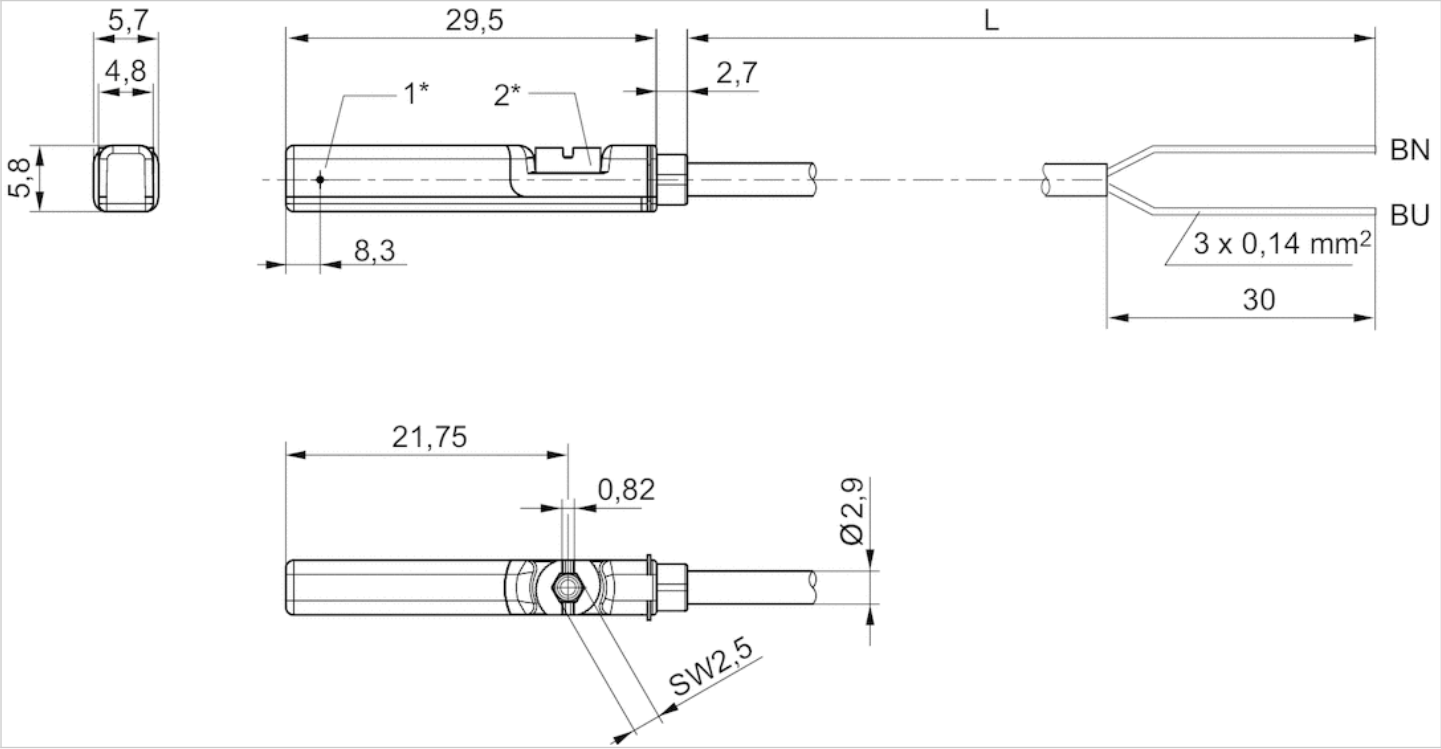

1* = switching point 2* = locking screw
L = cable length
BN=brown, BU=blue

Sensor, Series ST6-LT

- 6 mm T-slot
- with cable
- open cable ends, 3-pin Plug, M8x1, 3-pin, with knurled screw Plug, M12x1, 3-pin, with knurled screw
- -40 °C cold-resistant
- UL certification
- electronic PNP
- Direct mounting for series PRA
- Indirect mounting for series TRB, ITS



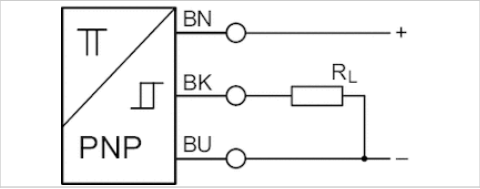

Certificates	CE declaration of conformity cULus RoHS
Ambient temperature min./max.	-40 ... 80 °C
Protection class	IP65, IP67, IP68
Switching point precision	±0,1 mT
Quiescent current (without load)	10 mA
Min./max. DC operating voltage	10 ... 30 V DC
Hysteresis	≥ 0,2 mT
Switching logic	NO (make contact)
LED status display	Yellow
Vibration resistance	10 - 55 Hz, 1 mm
Shock resistance	30 g / 11 ms
Cable length L	5 0.3 m

Technical data

Part No.	for	Type of contact	Cable length L	Voltage drop U at Imax
R412024011	PRA	electronic PNP	5 m	≤ 2,5 V
R412024669	PRA	electronic PNP	0.3 m	≤ 2,5 V
R412024670	PRA	electronic PNP	0.3 m	≤ 2,5 V

Part No.	DC switching current, max.	Max. switching frequency	Material Housing
R412024011	0.2 A	1000 Hz	Polyurethane
R412024669	0.2 A	1000 Hz	Polyamide
R412024670	0.2 A	1000 Hz	Polyamide

Part No.	Version	Temperature resistance	Fig.	
R412024011	short circuit resistant	-40 °C cold-resistant	Fig. 1	1)
R412024669	short circuit resistant	-40 °C cold-resistant	Fig. 2	2)
R412024670	short circuit resistant	-40 °C cold-resistant	Fig. 3	3)

1) open cable ends 3-pin
2) Plug M8x1 3-pin with knurled screw
3) plug M12 3-pin with knurled screw

Technical information

Cables must be firmly installed at temperatures of -40 °C ... -20 °C.

Technical information

Material	
Housing	Polyurethane Polyamide
Cable sheath	Polyurethane
Locking screw	Stainless steel

Dimensions

Fig. 1

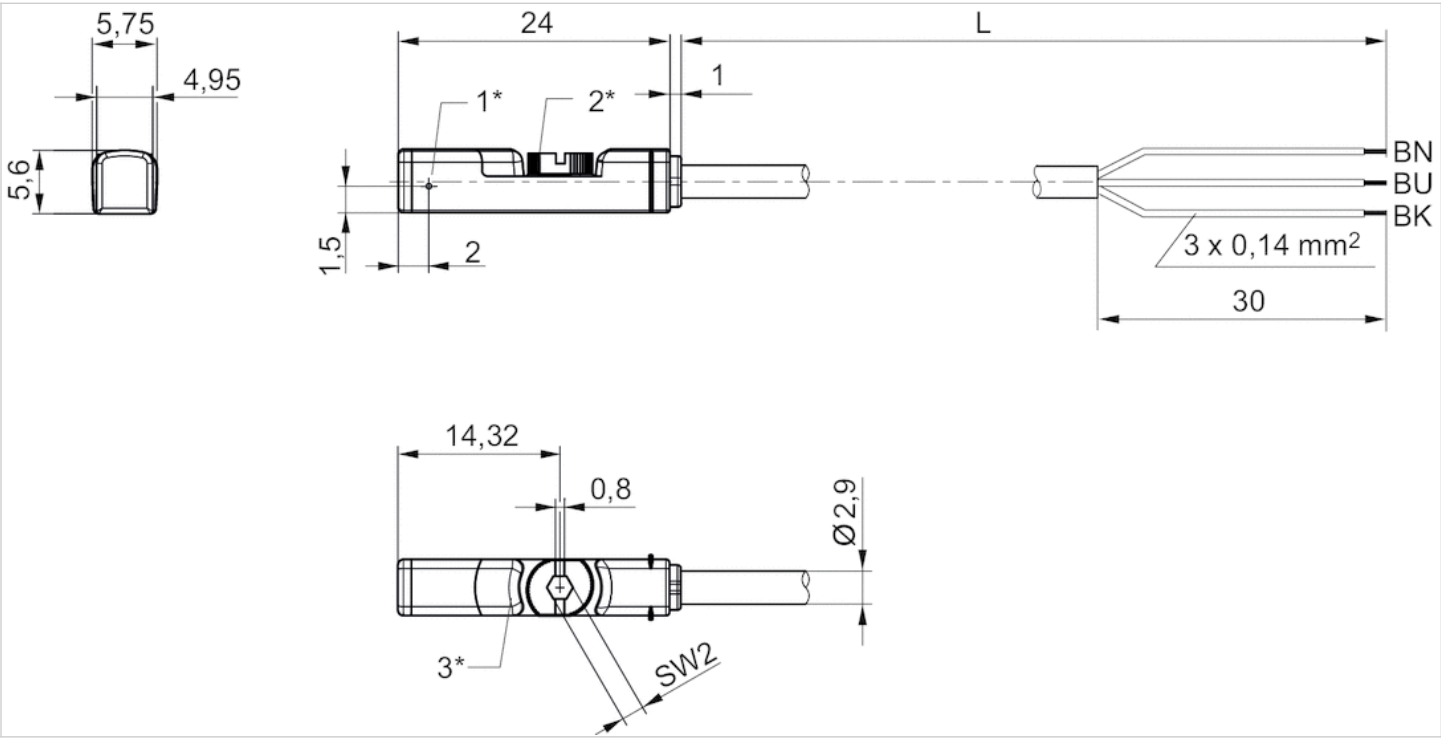

1* = switching point 2* = locking screw 3* = LED window, transparent
L = cable length
BN = brown, BK = black, BU = blue

Fig. 2

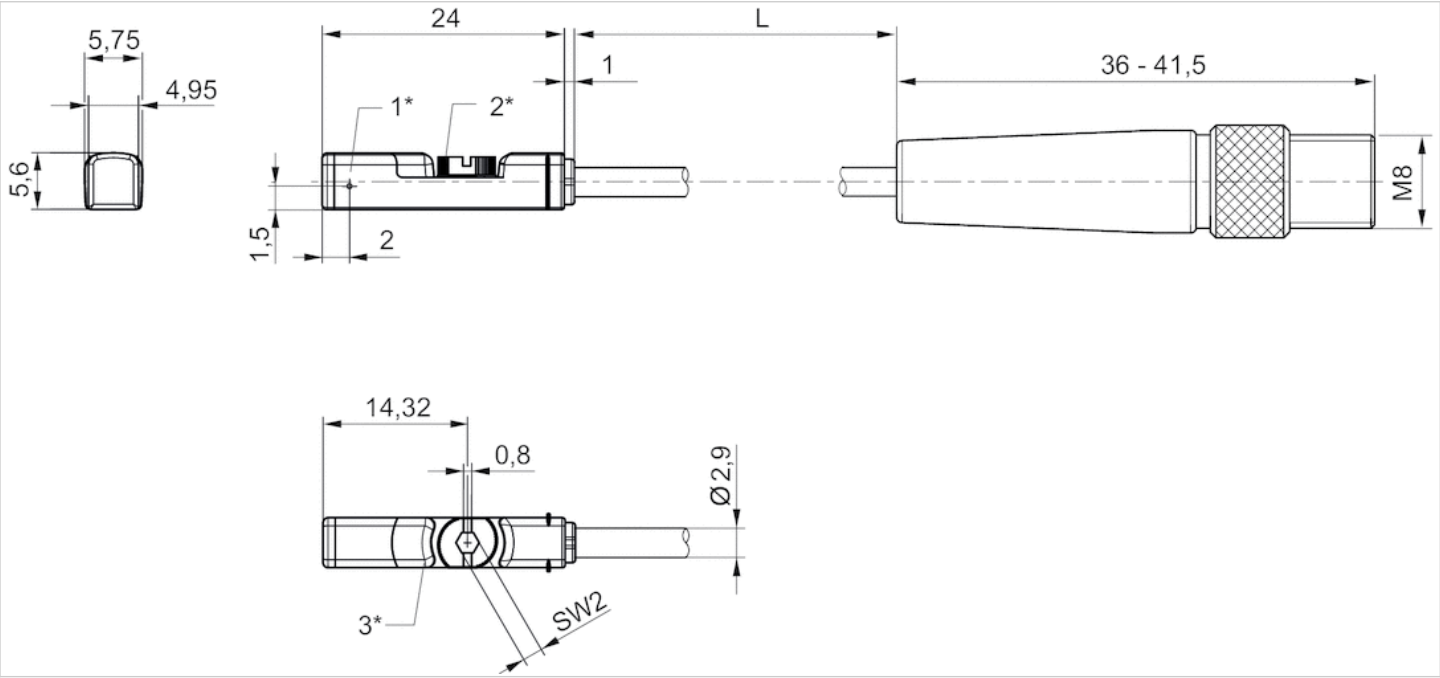

1* = switching point 2* = locking screw 3* = LED window, transparent
L = cable length

Fig. 3

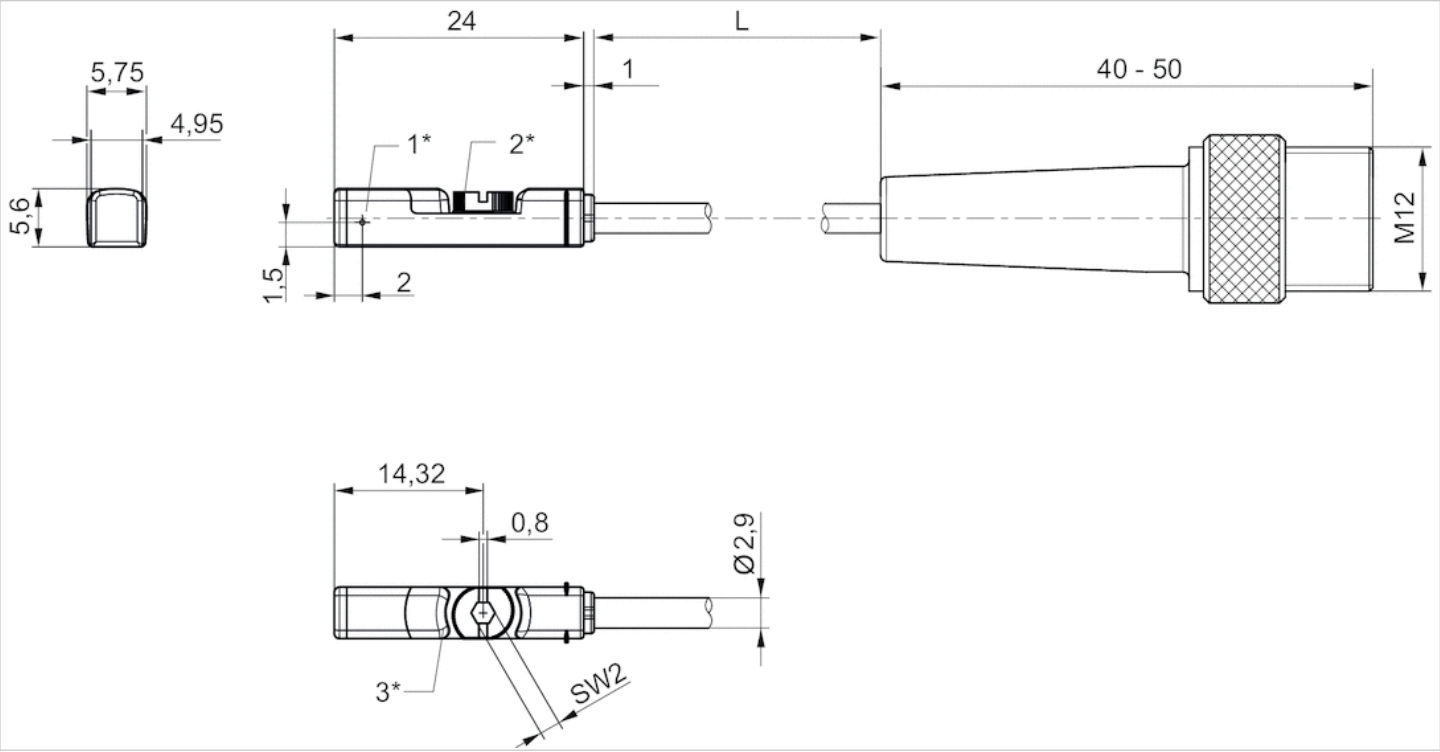

1* = switching point 2* = locking screw 3* = LED window, transparent
L = cable length

Sensor, Series IN1

- for locking unit, series LU6



Standardization	DIN EN 60947-5-2
Certificates	cULus
Ambient temperature min./max.	-20 ... 65 °C
Protection class	IP67
Hysteresis	5 - 15%, adjustable
Temperature drift	± 10 %
Residual ripple	≤ 10 %
Reproducibility	≤ 2 %
Switching logic	NO (make contact)
LED status display	Yellow

Technical data

Part No.	Operational voltage	Switching distance max.	Power consumption	Continuous current
R412010426	10 ... 30 V DC	2 mm	10 mA	0.2 A

Part No.	Short circuit resistance
R412010426	short circuit resistant Protected against polarity reversal

Technical information

Flush installation
Switching states:
1. Pressure applied to locking unit, clamping pliers are open, sensor does not emit a signal (normally open)
2. No pressure applied to locking unit, clamping pliers are closed, sensor emits a signal (feedback that LU6 is clamping)

Technical information

Material	
Housing	Brass

Dimensions

Dimensions

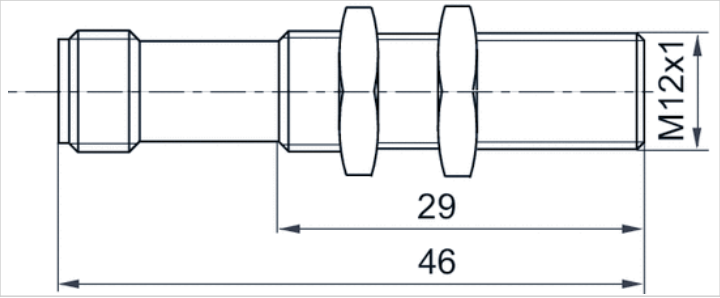

Pin assignments

Pin assignments, M12x1

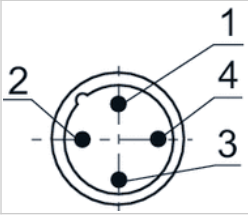

Pin	1	2	3
Allocation	Pin 1: operational voltage + UB	not assigned	m = mass

4
switch output Out

Sensors, Series SM6

- 6 mm groove
- with cable
- without wire end ferrule, tin-plated, 4-pin
- with distance measuring sensor, measurement range 32 ... 256 mm
- Analog
- Direct mounting for series PRA, PRE, CCI, KPZ, SSI, GPC, CVI
- Indirect mounting for series TRB, ITS, 167, MNI, ICM, TRR



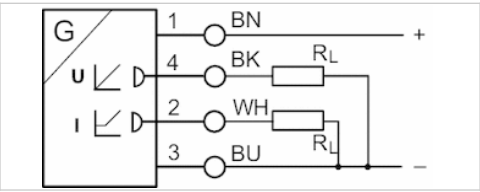

Certificates	cULus
Ambient temperature min./max.	-20 ... 70 °C
Protection class	IP67
Output signal	0 - 10 V DC, 4 - 20 mA
Quiescent current (without load)	25 mA
Maximum load (analog current output)	500 Ω
Residual ripple	≤ 10 %
sampling interval	1 ms
Resolution max. measuring range	0,05 mm
Repetitive precision max. measuring range	0.1 mm
Linearity deviation	0,3 mm
Sampling speed	3 m/s
Display	LED
LED status display	Yellow
Vibration resistance	10 - 55 Hz, 1 mm
Shock resistance	30 g / 11 ms
Cable length L	2 m

Technical data

Part No.	for	Type of contact	Cable length L
R412010141	PRA, PRE, CCI, KPZ, SSI, GPC, CVI	Analog	2 m
R412010143	PRA, PRE, CCI, KPZ, SSI, GPC, CVI	Analog	2 m
R412010262	PRA, PRE, CCI, KPZ, SSI, GPC, CVI	Analog	2 m
R412010264	PRA, PRE, CCI, KPZ, SSI, GPC, CVI	Analog	2 m
R412010411	PRA, PRE, CCI, KPZ, SSI, GPC, CVI	Analog	2 m
R412010413	PRA, PRE, CCI, KPZ, SSI, GPC, CVI	Analog	2 m
R412010415	PRA, PRE, CCI, KPZ, SSI, GPC, CVI	Analog	2 m
R412010417	PRA, PRE, CCI, KPZ, SSI, GPC, CVI	Analog	2 m

Part No.	max. measuring range	Overall length Sensor A
R412010141	32 mm	45 mm
R412010143	64 mm	77 mm
R412010262	96 mm	109 mm
R412010264	128 mm	141 mm
R412010411	160 mm	173 mm
R412010413	192 mm	205 mm

Part No.	max. measuring range	Overall length Sensor A
R412010415	224 mm	237 mm
R412010417	256 mm	269 mm

Part No.	Version
R412010141	short circuit resistant Protected against polarity reversal Overload protection
R412010143	short circuit resistant Protected against polarity reversal Overload protection
R412010262	short circuit resistant Protected against polarity reversal Overload protection
R412010264	short circuit resistant Protected against polarity reversal Overload protection
R412010411	short circuit resistant Protected against polarity reversal Overload protection
R412010413	short circuit resistant Protected against polarity reversal Overload protection
R412010415	short circuit resistant Protected against polarity reversal Overload protection
R412010417	short circuit resistant Protected against polarity reversal Overload protection

Technical information

Material	
Housing	Polyamide fiber-glass reinforced
Cable sheath	Polyurethane

Dimensions

Dimensions

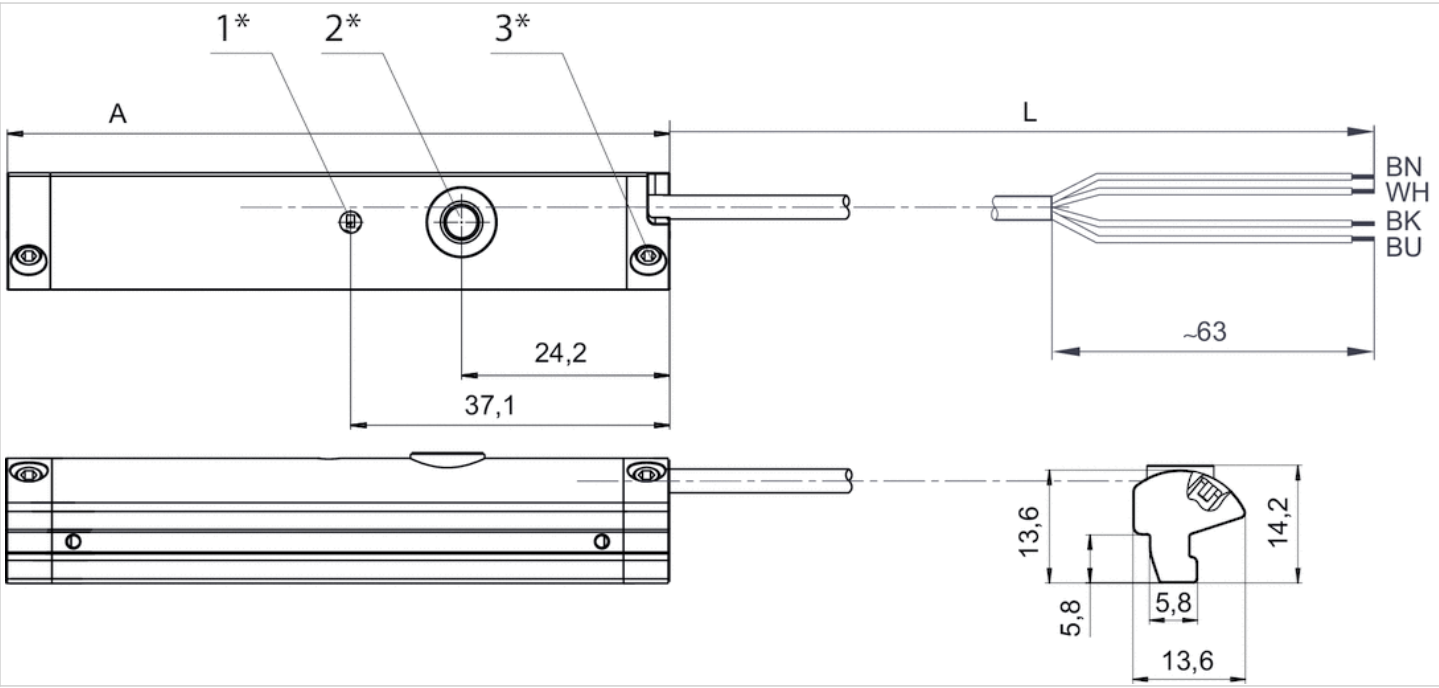

1* = LED 2* = teach button 3* = threaded pin M3x11
L = cable length
(1) BN=brown
(2) WH=white
(3) BU=blue

(4) BK=black
A = sensor length

Sensors, Series SM6

- 6 mm groove
- with cable
- Plug, M8x1, 4-pin, with knurled screw
- with distance measuring sensor, measurement range 32 ... 256 mm
- Analog
- Direct mounting for series PRA, PRE, CCI, KPZ, SSI, GPC, CVI
- Indirect mounting for series TRB, ITS, 167, MNI, ICM, TRR



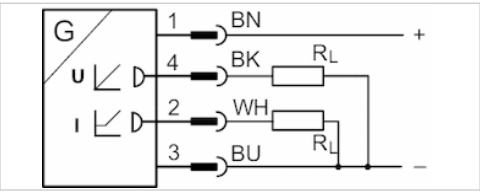

Certificates	cULus
Ambient temperature min./max.	-20 ... 70 °C
Protection class	IP67
Output signal	0 - 10 V DC, 4 - 20 mA
Quiescent current (without load)	25 mA
Min./max. DC operating voltage	15 ... 30 V DC
sampling interval	1 ms
Resolution max. measuring range	0,05 mm
Repetitive precision max. measuring range	0.1 mm
Linearity deviation	0,3 mm
Sampling speed	3 m/s
Display	LED
LED status display	Yellow
Vibration resistance	10 - 55 Hz, 1 mm
Shock resistance	30 g / 11 ms
Cable length L	0.3 m

Technical data

Part No.	for	Type of contact	Cable length L
R412010142	PRA, PRE, CCI, KPZ, SSI, GPC, CVI	Analog	0.3 m
R412010144	PRA, PRE, CCI, KPZ, SSI, GPC, CVI	Analog	0.3 m
R412010263	PRA, PRE, CCI, KPZ, SSI, GPC, CVI	Analog	0.3 m
R412010265	PRA, PRE, CCI, KPZ, SSI, GPC, CVI	Analog	0.3 m
R412010410	PRA, PRE, CCI, KPZ, SSI, GPC, CVI	Analog	0.3 m
R412010412	PRA, PRE, CCI, KPZ, SSI, GPC, CVI	Analog	0.3 m
R412010414	PRA, PRE, CCI, KPZ, SSI, GPC, CVI	Analog	0.3 m
R412010416	PRA, PRE, CCI, KPZ, SSI, GPC, CVI	Analog	0.3 m

Part No.	max. measuring range	Overall length Sensor A
R412010142	32 mm	45 mm
R412010144	64 mm	77 mm
R412010263	96 mm	109 mm
R412010265	128 mm	141 mm
R412010410	160 mm	173 mm
R412010412	192 mm	205 mm

Part No.	max. measuring range	Overall length Sensor A
R412010414	224 mm	237 mm
R412010416	256 mm	269 mm

Part No.	Version
R412010142	short circuit resistant Protected against polarity reversal Overload protection
R412010144	short circuit resistant Protected against polarity reversal Overload protection
R412010263	short circuit resistant Protected against polarity reversal Overload protection
R412010265	short circuit resistant Protected against polarity reversal Overload protection
R412010410	short circuit resistant Protected against polarity reversal Overload protection
R412010412	short circuit resistant Protected against polarity reversal Overload protection
R412010414	short circuit resistant Protected against polarity reversal Overload protection
R412010416	short circuit resistant Protected against polarity reversal Overload protection

Technical information

Material	
Housing	Polyamide fiber-glass reinforced
Cable sheath	Polyurethane

Dimensions

Dimensions

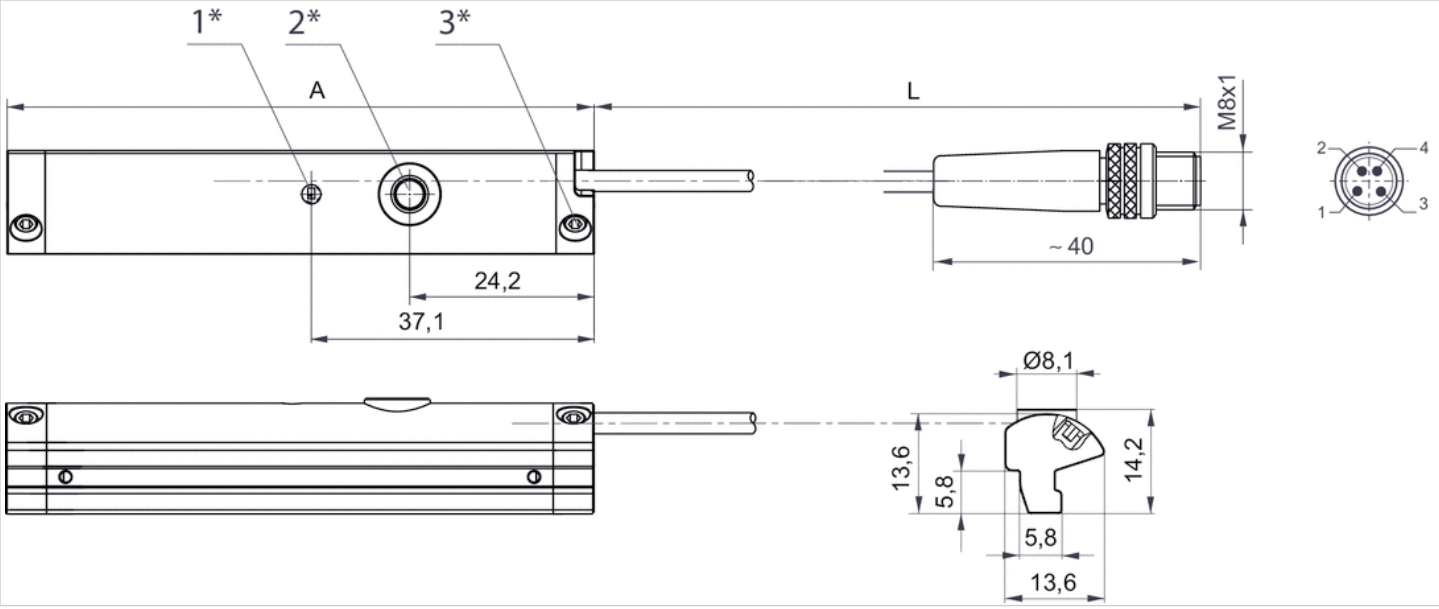

1* = LED 2* = teach button 3* = threaded pin M3x11
L = cable length
Pin assignment: 1 = (+), 2 = (OUT 1) 3 = (GND), 4 = (OUT 2), EN 60947-5-7
A = sensor length

Sensors, Series SM6-AL

- with cable
- Plug, M8x1, 4-pin
- with distance measuring sensor, measurement range 107 - 1007 mm
- IO-Link
- Analog
- Indirect mounting for series PRA, ITS, RTC, CVI



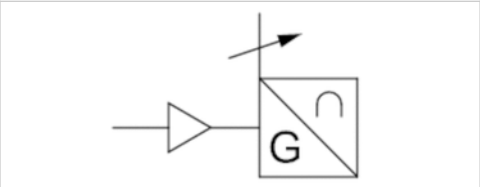

Certificates	cULus
Ambient temperature min./max.	-20 ... 70 °C
Protection class	IP65, IP67
Output signal	0 - 10 V DC, 4 - 20 mA
Quiescent current (without load)	35 mA
Current signal	4 ... 20 mA
Maximum load (analog current output)	500 Ω
Residual ripple	≤ 10 %
sampling interval	1,15 ms
Resolution max. measuring range	typ. 0,03 % FSR
Repetitive precision max. measuring range	typ. 0,06 % FSR
Linearity deviation	0,5 mm
Sampling speed Partial stroke	1,5 m/s
Sampling speed Full stroke	3 m/s
Display	2 LED
Vibration resistance	10 - 55 Hz, 1 mm
Shock resistance	30 g / 11 ms
Cable length L	0.3 m

Technical data

Part No.	Type of contact	Cable length L	max. measuring range	Overall length Sensor A
R412010880	Analog	0.3 m	107 mm	109 mm
R412010881	Analog	0.3 m	143 mm	145 mm
R412010882	Analog	0.3 m	179 mm	181 mm
R412010883	Analog	0.3 m	215 mm	217 mm
R412010884	Analog	0.3 m	251 mm	253 mm
R412010885	Analog	0.3 m	287 mm	289 mm
R412010886	Analog	0.3 m	323 mm	325 mm
R412010887	Analog	0.3 m	359 mm	361 mm
R412010888	Analog	0.3 m	395 mm	397 mm
R412010889	Analog	0.3 m	431 mm	433 mm
R412010890	Analog	0.3 m	467 mm	469 mm
R412010891	Analog	0.3 m	503 mm	505 mm
R412010892	Analog	0.3 m	539 mm	541 mm
R412010893	Analog	0.3 m	575 mm	577 mm
R412010894	Analog	0.3 m	611 mm	613 mm
R412010895	Analog	0.3 m	647 mm	649 mm
R412010896	Analog	0.3 m	683 mm	685 mm

Part No.	Type of contact	Cable length L	max. measuring range	Overall length Sensor A
R412010897	Analog	0.3 m	719 mm	721 mm
R412010898	Analog	0.3 m	755 mm	757 mm
R412010899	Analog	0.3 m	791 mm	793 mm
R412010900	Analog	0.3 m	827 mm	829 mm
R412010901	Analog	0.3 m	863 mm	865 mm
R412010902	Analog	0.3 m	899 mm	901 mm
R412010903	Analog	0.3 m	935 mm	937 mm
R412010904	Analog	0.3 m	971 mm	973 mm
R412010905	Analog	0.3 m	1007 mm	1009 mm

Part No.	Incl. number of sensor clamp pairs	Current signal
R412010880	2 piece	4 ... 20 mA
R412010881	2 piece	4 ... 20 mA
R412010882	2 piece	4 ... 20 mA
R412010883	2 piece	4 ... 20 mA
R412010884	2 piece	4 ... 20 mA
R412010885	3 piece	4 ... 20 mA
R412010886	3 piece	4 ... 20 mA
R412010887	3 piece	4 ... 20 mA
R412010888	3 piece	4 ... 20 mA
R412010889	3 piece	4 ... 20 mA
R412010890	4 piece	4 ... 20 mA
R412010891	4 piece	4 ... 20 mA
R412010892	4 piece	4 ... 20 mA
R412010893	4 piece	4 ... 20 mA
R412010894	4 piece	4 ... 20 mA
R412010895	4 piece	4 ... 20 mA
R412010896	5 piece	4 ... 20 mA
R412010897	5 piece	4 ... 20 mA
R412010898	5 piece	4 ... 20 mA
R412010899	5 piece	4 ... 20 mA
R412010900	6 piece	4 ... 20 mA
R412010901	6 piece	4 ... 20 mA
R412010902	6 piece	4 ... 20 mA
R412010903	6 piece	4 ... 20 mA
R412010904	6 piece	4 ... 20 mA
R412010905	6 piece	4 ... 20 mA

Part No.	Version
R412010880	short circuit resistant Protected against polarity reversal Overload protection
R412010881	short circuit resistant Protected against polarity reversal Overload protection
R412010882	short circuit resistant Protected against polarity reversal Overload protection
R412010883	short circuit resistant Protected against polarity reversal Overload protection
R412010884	short circuit resistant Protected against polarity reversal Overload protection
R412010885	short circuit resistant Protected against polarity reversal Overload protection

Part No.	Version
R412010886	short circuit resistant Protected against polarity reversal Overload protection
R412010887	short circuit resistant Protected against polarity reversal Overload protection
R412010888	short circuit resistant Protected against polarity reversal Overload protection
R412010889	short circuit resistant Protected against polarity reversal Overload protection
R412010890	short circuit resistant Protected against polarity reversal Overload protection
R412010891	short circuit resistant Protected against polarity reversal Overload protection
R412010892	short circuit resistant Protected against polarity reversal Overload protection
R412010893	short circuit resistant Protected against polarity reversal Overload protection
R412010894	short circuit resistant Protected against polarity reversal Overload protection
R412010895	short circuit resistant Protected against polarity reversal Overload protection
R412010896	short circuit resistant Protected against polarity reversal Overload protection
R412010897	short circuit resistant Protected against polarity reversal Overload protection
R412010898	short circuit resistant Protected against polarity reversal Overload protection
R412010899	short circuit resistant Protected against polarity reversal Overload protection
R412010900	short circuit resistant Protected against polarity reversal Overload protection
R412010901	short circuit resistant Protected against polarity reversal Overload protection
R412010902	short circuit resistant Protected against polarity reversal Overload protection
R412010903	short circuit resistant Protected against polarity reversal Overload protection
R412010904	short circuit resistant Protected against polarity reversal Overload protection
R412010905	short circuit resistant Protected against polarity reversal Overload protection

Technical information

Holders for cylinder series PRA are included in the scope of delivery. For cylinder series ITS, please order the appropriate holders separately.
FSR: Full Scale Range, max. measurement range
The IO-Link device description (IODD) for the SM6-AL distance measuring sensor is available for download in the Media Centre.

Technical information

Material	
Housing	Aluminum
Cable sheath	Polyurethane
End caps	Polyamide

Dimensions

Dimensions

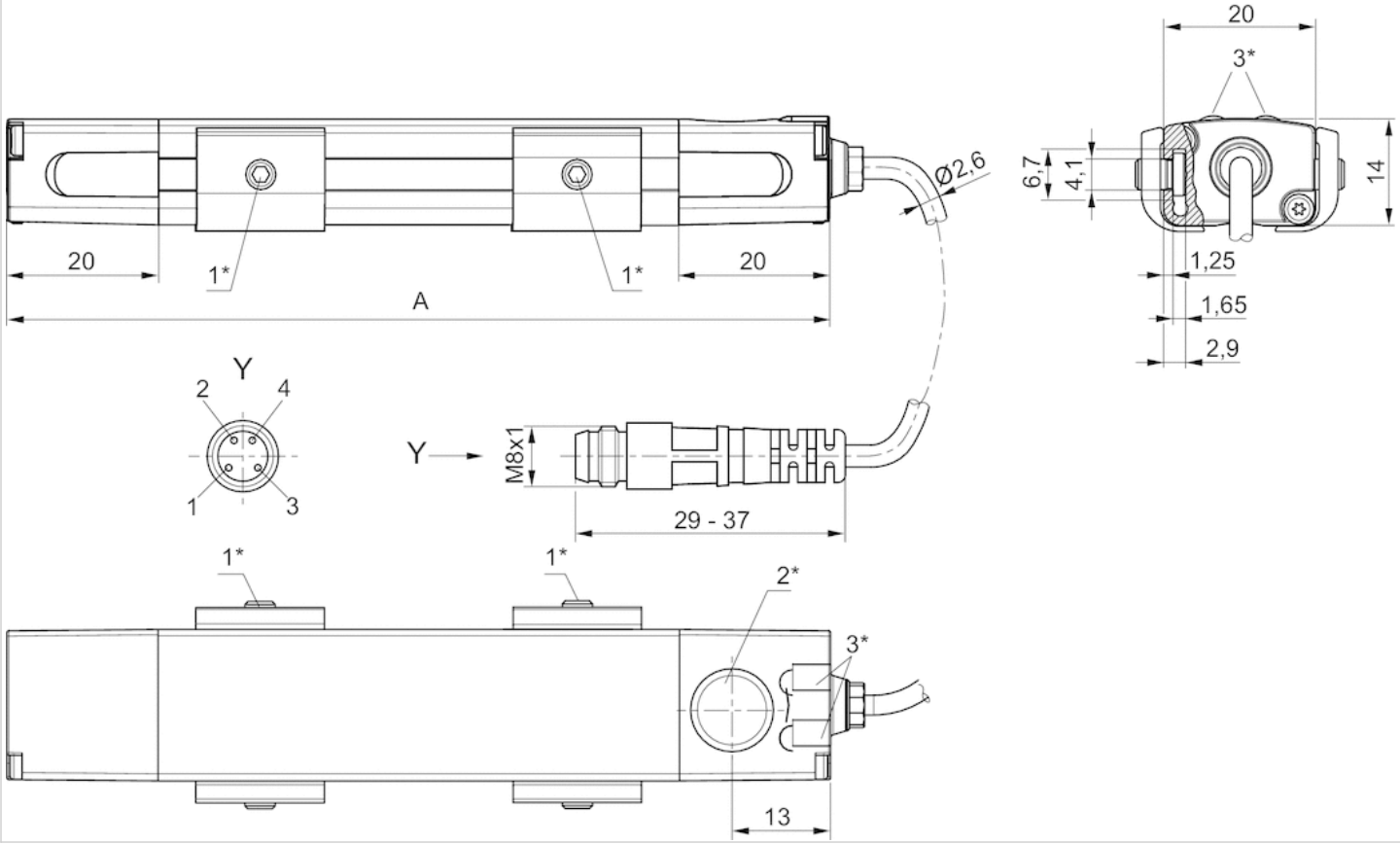

1* = threaded pin M3x11 2* = teach area 3* = LED
A = sensor length
Pin assignment: 1 = (+), 2 = (OUT 1) 3 = (GND), 4 = (OUT 2/IO-Link), EN 60947-5-7
LED 1: yellow = measuring operation, red = error
LED 2: green = voltage signal, blue = current signal

Sensor, Series SN3

- welding-proof
- Plug, M12, 3-pin
- welding-proof
- electronic PNP
- Indirect mounting for series PRA, PRE, CCI, KPZ, KHZ, FLT, GPC, CVI



Ambient temperature min./max.	-25 ... 70 °C
Protection class	IP67, IP65
Switching point precision	±0,1 mT
Nominal current, actuated state	≤ 10 mA
Quiescent current (without load)	≤ 5 mA
Min./max. DC operating voltage	10 V DC
LED status display	Yellow
Vibration resistance	55 Hz, 1 mm
Shock resistance	30 g / 11 ms

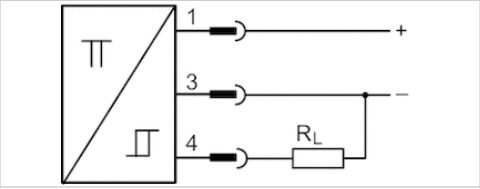

Technical data

Part No.	Type of contact	Voltage drop U at Imax	DC switching current, max.
0830100438	electronic PNP	≤ 1,8 V	0.2 A

Part No.	Max. switching frequency
0830100438	20 Hz

Part No.	Version	welding-proof
0830100438	short circuit resistant Protected against polarity reversal	welding-proof

Technical information

Material	
Housing	Polyamide

Dimensions

Dimensions

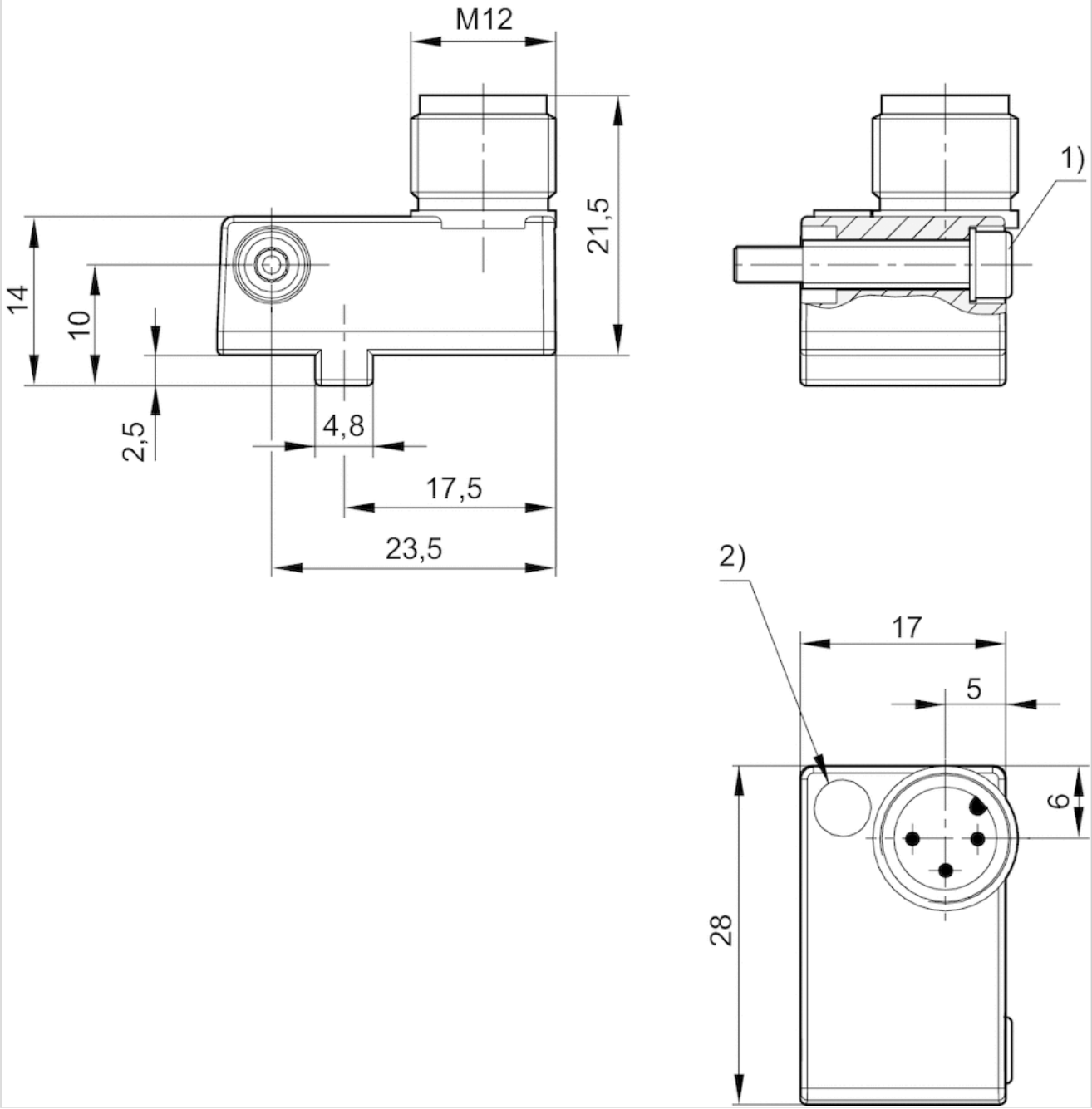

1) Clamping screw
2) LED
Pin assignments: 1 = (+), 3 = (-), 4 = (OUT), EN 60947-5-2:1998

Pin assignments

Pin assignments

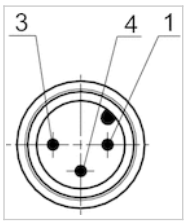

Pin	1	3	4
Allocation	(+)	(-)	(OUT)
			EN 60947-5-2:1998

Series CAT

- Measuring instrument for adjusting the pneumatic cushioning
- for MNI, CSL-RD, CCL-IS, ICS, RPC, PRA/TRB, ITS



Certificates	CE declaration of conformity
Ambient temperature min./max.	0 ... 40 °C
Measurement range Min.	0.2 m/s
Measurement range Max.	2 m/s
LED status display	Green Yellow Red
Protection class	IP50
Weight	0.12 kg

Technical data

Part No.	for series
R412026160	MNI, CSL-RD, CCL-IS, ICS, RPC, PRA/TRB, ITS

Scope of delivery: 1 measuring instrument, 2 fastening strips, 1 power pack 3.7 V, 1 USB charging cable, Operating instructions, QR code notice, 1 case with foam inlay

Technical information

The CAT measuring instrument uses Bluetooth radio technology for wireless connection with the "Aventics" app, which is available free of charge in the Android/Play Store and/or the IOS/App Store.

Technical information

Material	
Housing	Luran S

Dimensions

Dimensions

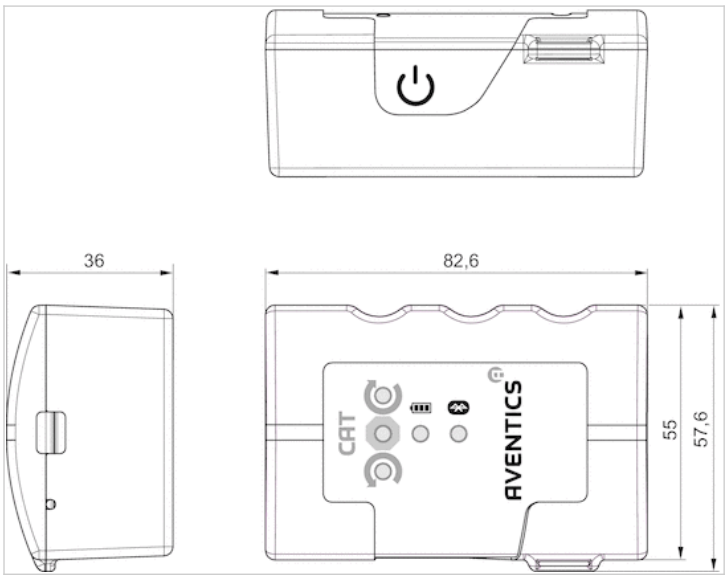

Sensor mounting, Series CB1

- for series SN3
- to mount on cylinder PRA, KPZ, GPC, CCI, KHZ



Weight 0.007 kg

Technical data

Part No.	for series
1827020386	SN3

Technical information

Material	
	Aluminum

Dimensions

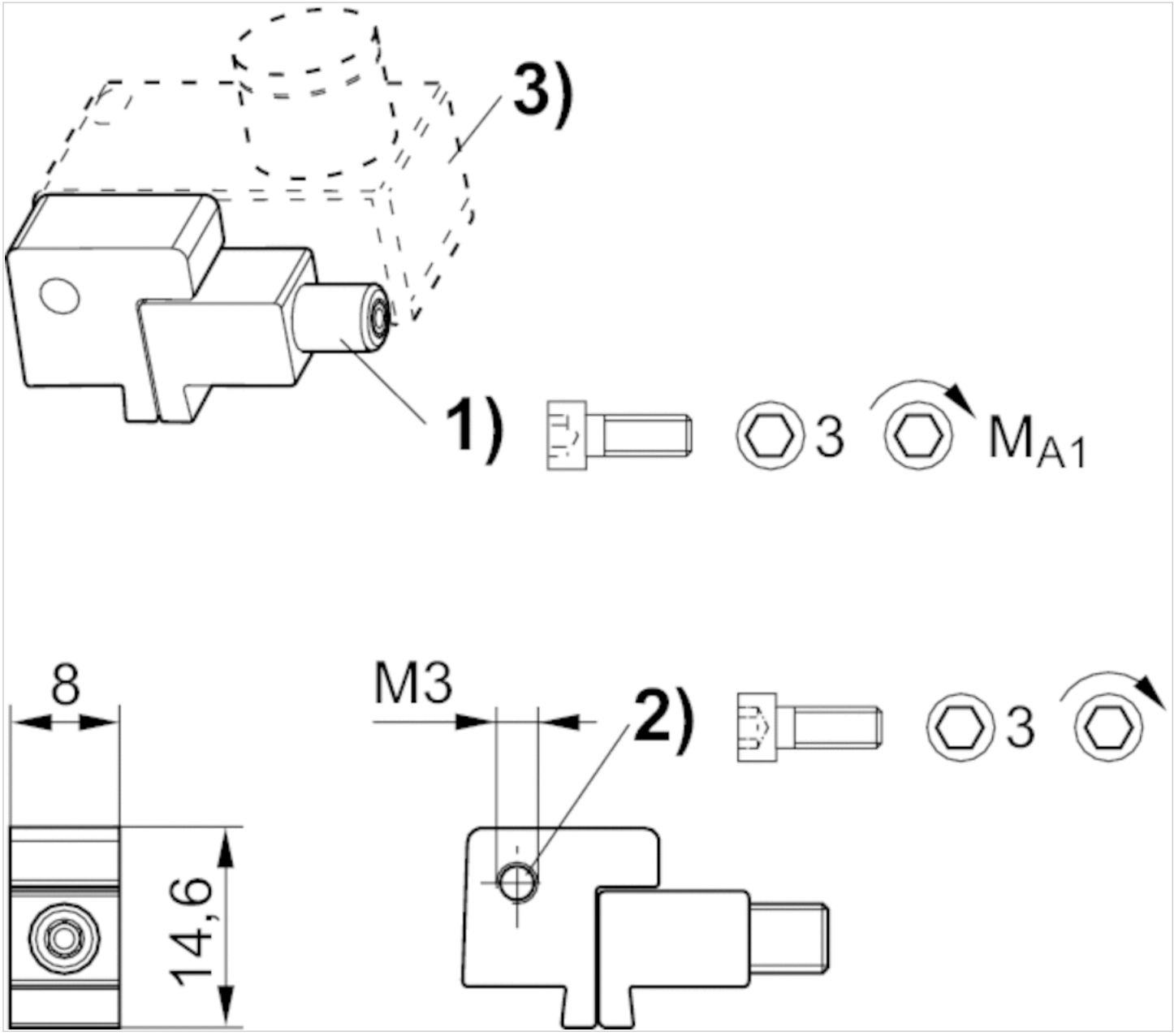

1) Clamping screw 2) Mounting screw for sensor 3) Sensor

Dimensions

Part No.	1)	MA1 [Nm]
1827020386	M3x25	1,8 +0,4

Sensor mounting, Series CB1

- for series ST6, SM6
- to mount on cylinder TRB, C12P, 167, CVI, TRR, 523



Weight See table below

Technical data

Part No.	Cylinders Ø min.	Cylinders Ø max.	for series	Weight
1827020282	32 mm	40 mm	ST6, SM6	0.016 kg
1827020283	50 mm	63 mm	ST6, SM6	0.029 kg
1827020284	80 mm	100 mm	ST6, SM6	0.042 kg

Technical information

Material	
	Aluminum

Dimensions

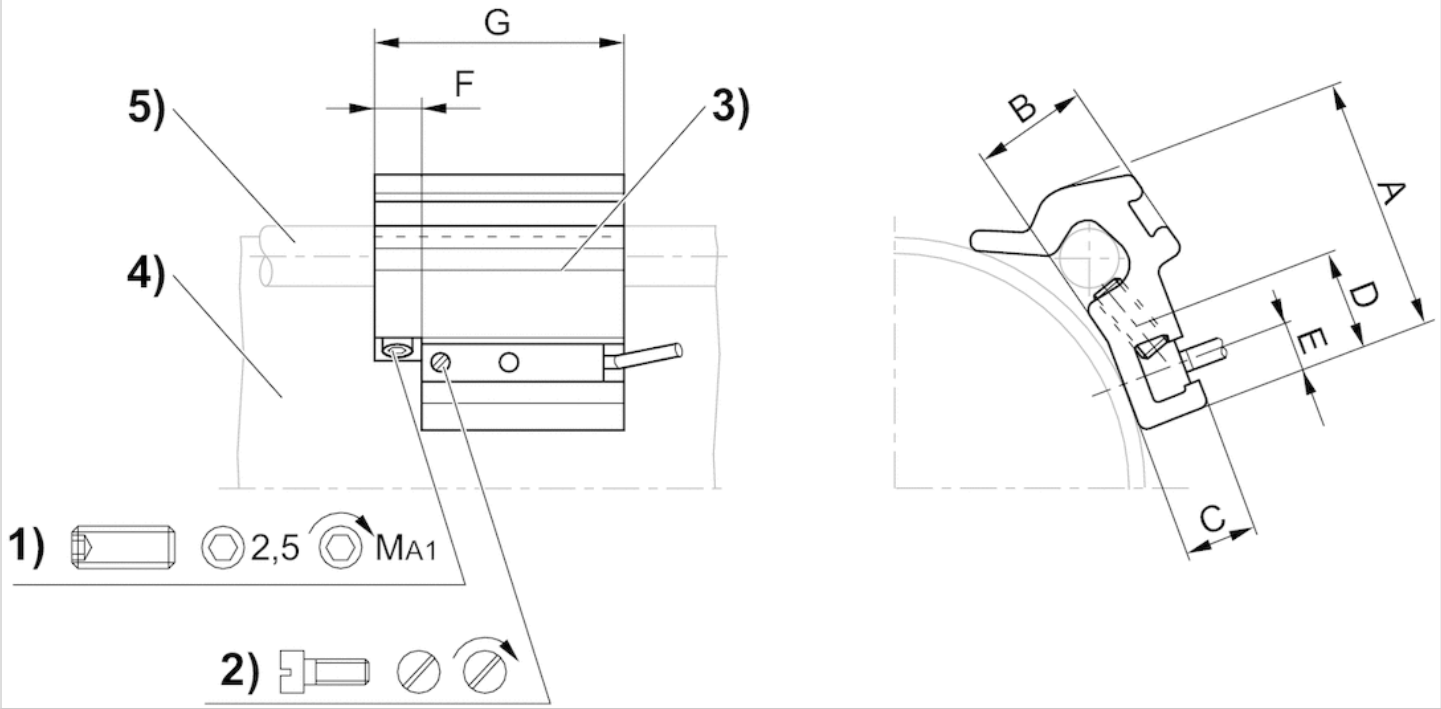

1) Clamping threaded pin 2) Mounting screw for sensor 3) Sensor 4) Cylinder profile 5) Tie rod

Dimensions

Part No.	A	B	C	D	E	F	G	1)	MA1 [Nm]
1827020282	26	10	7	14	5	8	40	M5x8	2 ±0,2
1827020283	32.5	15.5	7	14	5	8	40	M5x10	2 ±0,2
1827020284	43	17	6.9	14	5	8	40	M5x16	2 ±0,2

Sensor mounting, Series CB1

- for series SN1, SN2
- to mount on cylinder PRA



Weight 0.006 kg

Technical data

Part No.	for series
1827020084	SN1, SN2

Technical information

Material	
	Aluminum

Dimensions

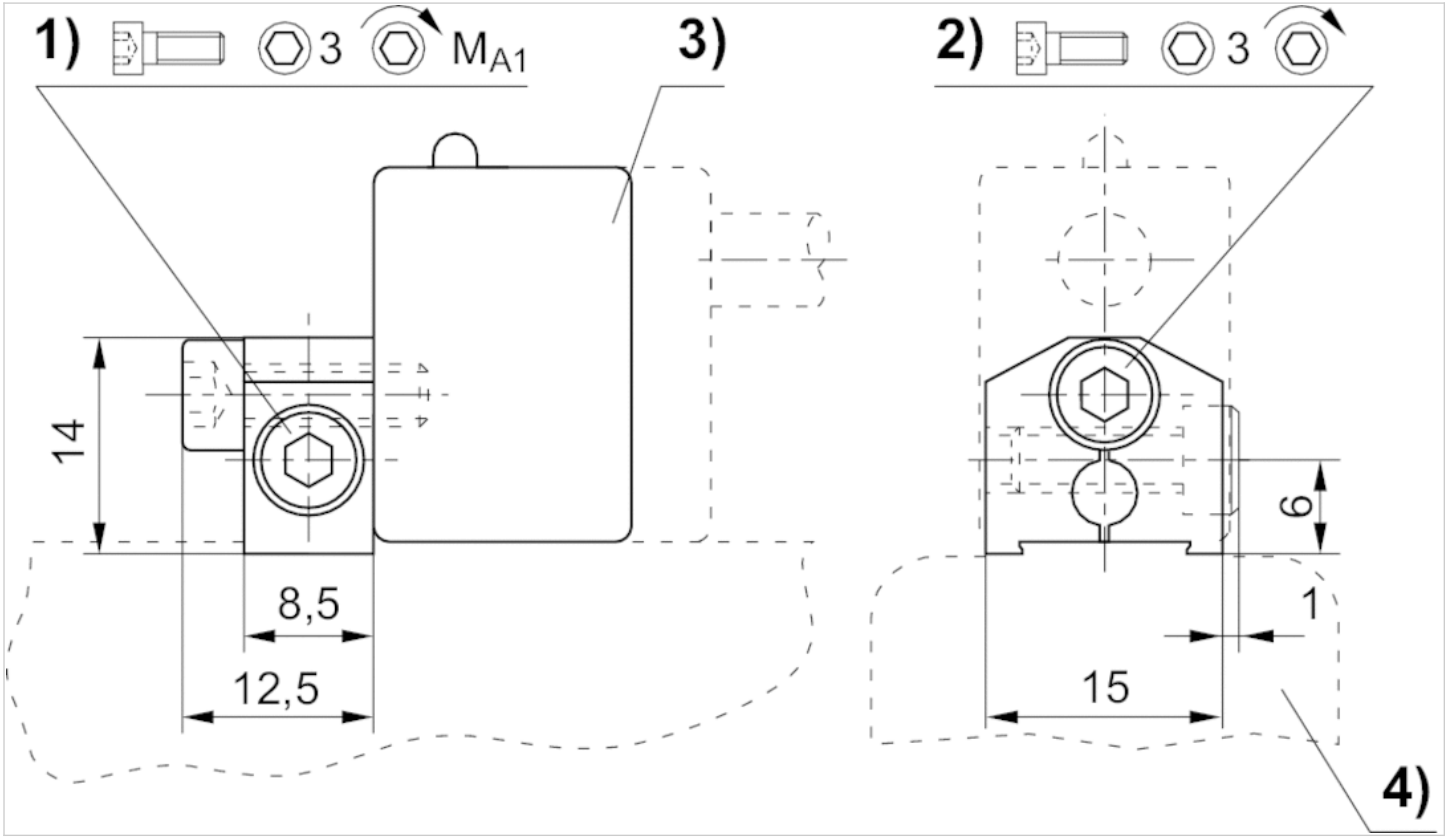

1) Clamping screw 2) Mounting screw for sensor 3) Sensor 4) Cylinder profile

Dimensions

Part No.	1)	MA1 [Nm]
1827020084	M4x12	2

Round plug connector, Series CON-RD

- Socket, M8x1, 3-pin, A-coded, straight, 180°
- UL (Underwriters Laboratories)
- unshielded



Connection type	Soldering
Ambient temperature min./max.	-25 ... 80 °C
Operational voltage	48 V AC/DC
Protection class	IP67
Weight	0.009 kg

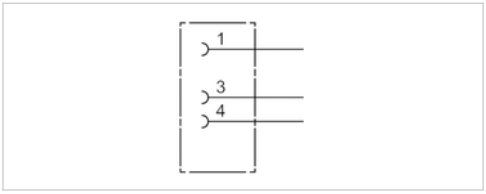

Technical data

Part No.	Max. current	suitable cable-Ø min./max
1834484173	4 A	3.5 / 5 mm

Technical information

The specified protection class is only valid in assembled and tested state.

Technical information

Material	
Housing	Polyamide

Dimensions

Dimensions

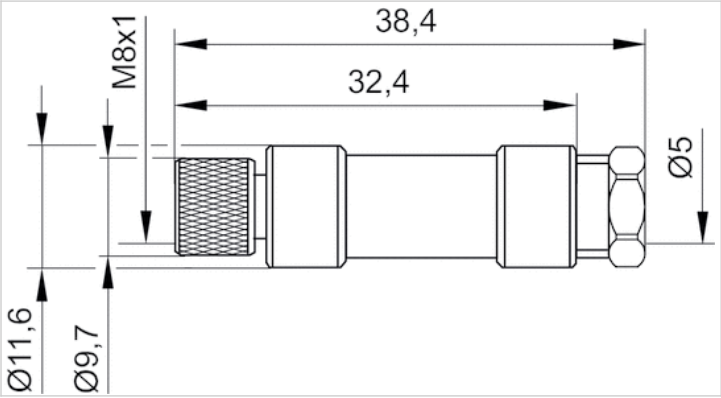

Pin assignments

Pin assignment, socket

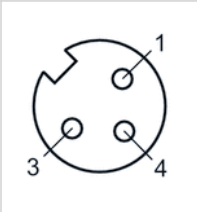

Round plug connector, Series CON-RD

- Socket, M8x1, 3-pin, A-coded, angled, 90°
- UL (Underwriters Laboratories)
- unshielded



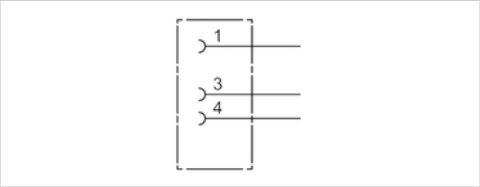

Connection type	Soldering
Ambient temperature min./max.	-40 ... 85 °C
Operational voltage	48 V AC/DC
Protection class	IP67
Weight	0.01 kg

Technical data

Part No.	Max. current	Contact assignment	suitable cable-Ø min./max
1834484174	4 A	3	3.5 / 5 mm

Technical information

The specified protection class is only valid in assembled and tested state.

Technical information

Material	
Housing	Polyamide

Dimensions

Dimensions

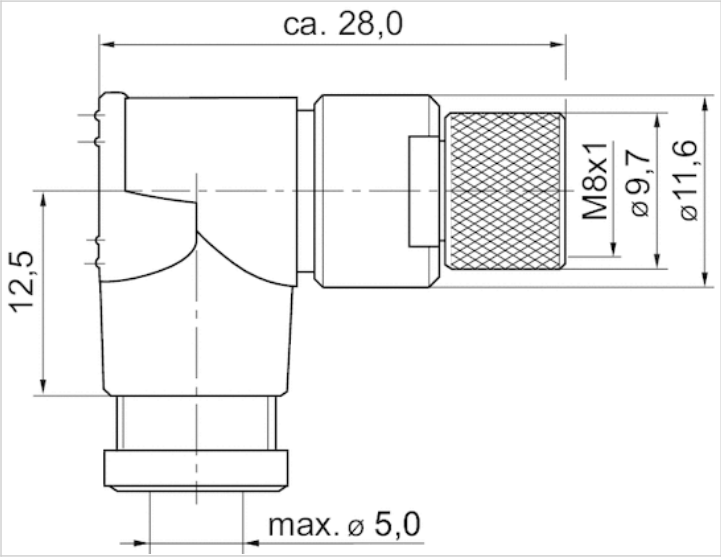

Pin assignments

Pin assignment, socket

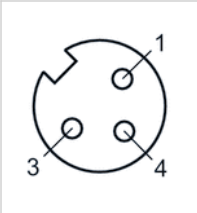

Round plug connector, Series CON-RD

- Socket M8x1 3-pin A-coded straight 180°
- open cable ends
- with cable
- UL (Underwriters Laboratories)
- unshielded



Ambient temperature min./max.	-25 ... 85 °C
Operational voltage	48 V AC/DC
Protection class	IP67
Wire cross-section	0.24 mm²
Weight	See table below

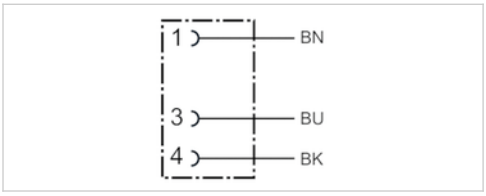

Technical data

Part No.	Max. current	Number of wires	Cable-Ø	Cable length	Certification	Weight
1834484166	4 A	3	4.5 mm	3 m	UL (Underwriters Laboratories)	0.087 kg
1834484168	4 A	3	4.5 mm	5 m	UL (Underwriters Laboratories)	0.141 kg
1834484247	4 A	3	4.5 mm	10 m	UL (Underwriters Laboratories)	0.277 kg

Technical information

The specified protection class is only valid in assembled and tested state.

Technical information

Material	
Housing	Polyurethane
Cable sheath	Polyurethane

Dimensions

Dimensions

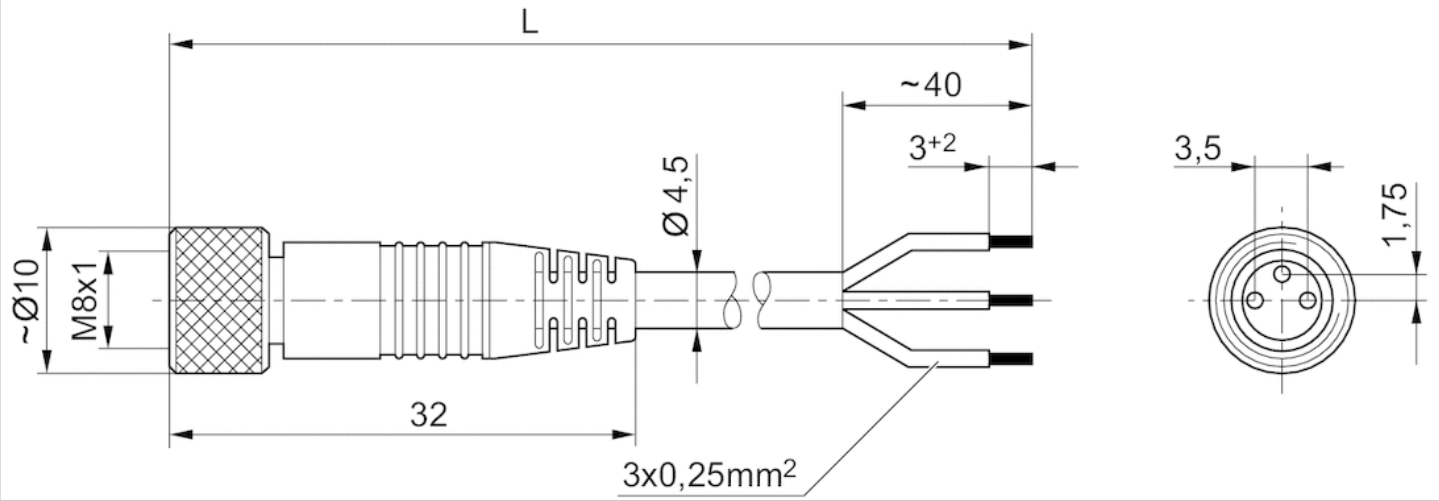

L = length

Pin assignments

Pin assignment, socket

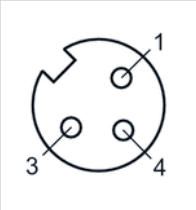

(1) BN=brown
(3) BU=blue
(4) BK=black

Round plug connector, Series CON-RD

- Socket M8x1 3-pin A-coded angled 90°
- open cable ends
- with cable
- unshielded



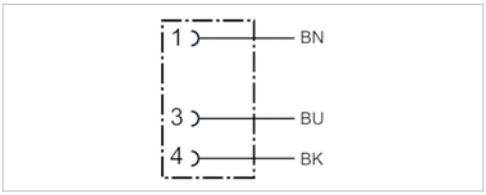

Ambient temperature min./max.	-40 ... 85 °C
Operational voltage	48 V AC/DC
Protection class	IP67
Wire cross-section	0.24 mm²
Weight	See table below

Technical data

Part No.	Max. current	Number of wires	Cable-Ø	Cable length	Weight
1834484167	4 A	3	4.5 mm	3 m	0.087 kg
1834484169	4 A	3	4.5 mm	5 m	0.139 kg
1834484248	4 A	3	4.5 mm	10 m	0.279 kg

Technical information

The specified protection class is only valid in assembled and tested state.

Technical information

Material	
Housing	Polyurethane
Cable sheath	Polyurethane

Dimensions

Dimensions

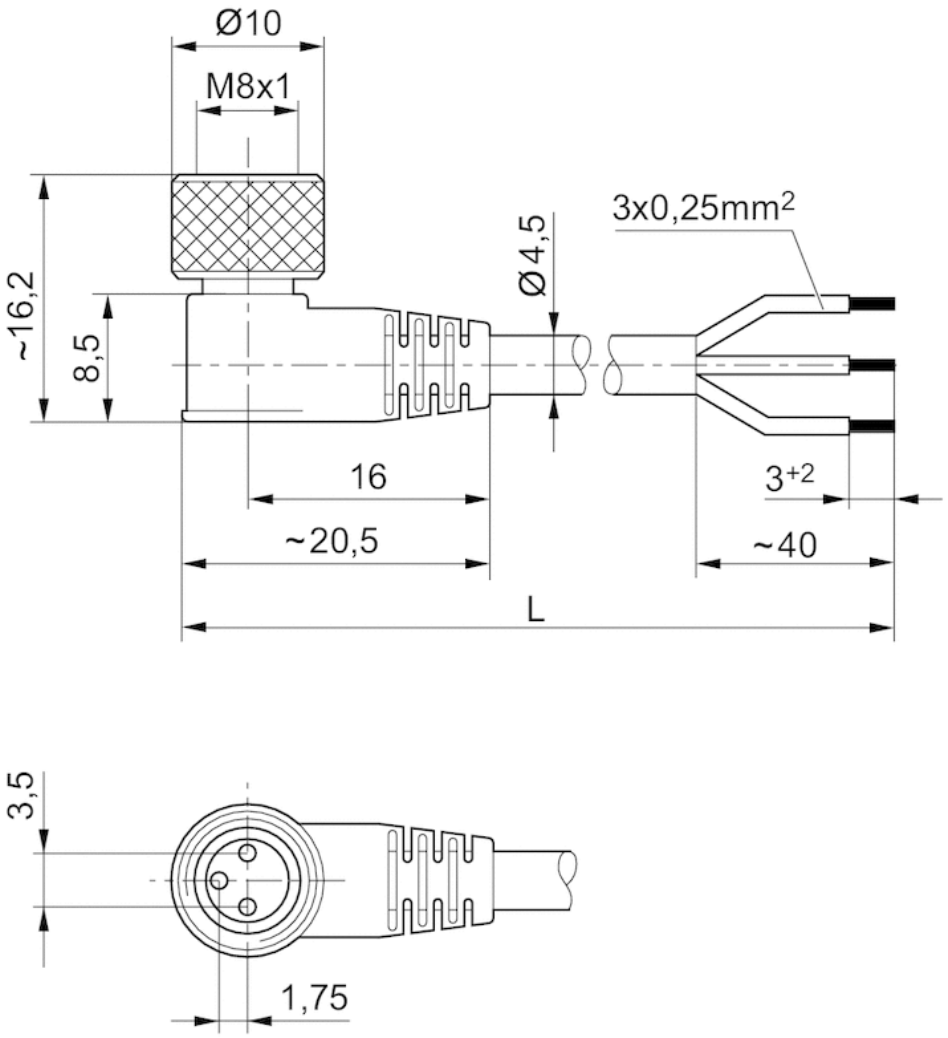

L = length

Pin assignments

Pin assignment, socket

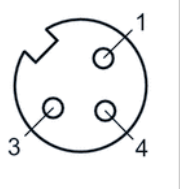

(1) BN=brown
(3) BU=blue
(4) BK=black

Round plug connector, Series CON-RD

- Socket M12x1 5-pin A-coded angled 90°
- open cable ends
- for DeviceNet
- with cable
- unshielded



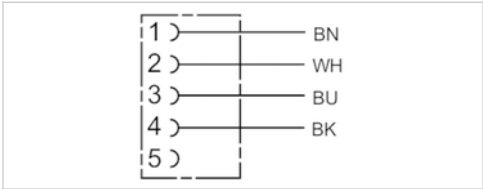

Ambient temperature min./max.	-40 ... 85 °C
Operational voltage	48 V AC/DC
Protection class	IP65
Wire cross-section	0.34 mm²
Weight	See table below

Technical data

Part No.	Max. current	Number of wires	Cable-Ø	Cable length	Weight
1834484259	4 A	4	5.2 mm	3 m	0.126 kg
1834484260	4 A	4	5.2 mm	5 m	0.195 kg
1834484261	4 A	4	5.2 mm	10 m	0.38 kg

Technical information

The specified protection class is only valid in assembled and tested state.

Technical information

Material	
Cable sheath	Polyurethane

Dimensions

Dimensions

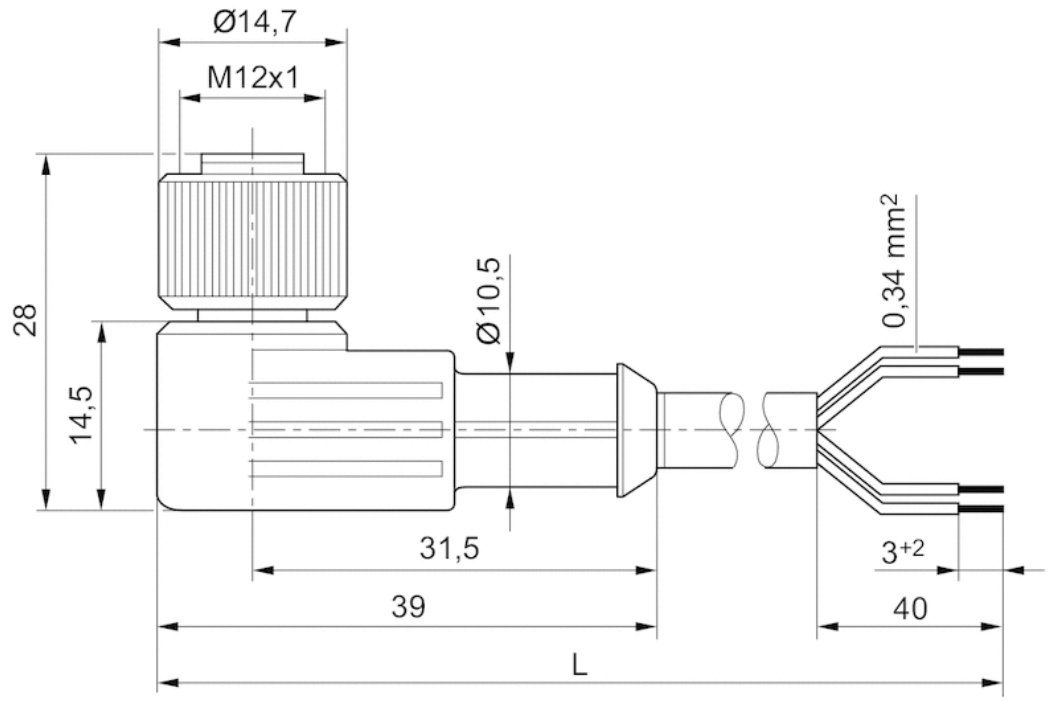

L = length

Pin assignments

Pin assignment, socket

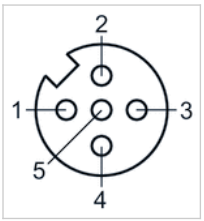

(1) BN=brown
(2) WH=white
(3) BU=blue
(4) BK=black
(5) not assigned

Silencers, series SI1

- G 1/8
- Sintered bronze



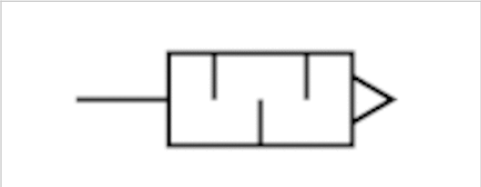

Working pressure min./max.	0 ... 10 bar
Ambient temperature min./max.	-25 ... 80 °C
Medium	Compressed air
Sound pressure level	75 dB
Weight	0.01 kg
Comment	Flow characteristic curves can be found under “Diagrams”.

Technical data

Part No.	Compressed air connection	Flow	Delivery unit
		Qn	
1827000000	G 1/8	1623 l/min	10 piece

Weight per piece

Nominal flow Qn at p1 = 6 bar (absolute) freely discharged. Sound pressure level measured at 6 bar against atmosphere at 1 m distance.

Technical information

Material	
Silencer	Sintered bronze
Thread	Brass

Dimensions

Dimensions in mm

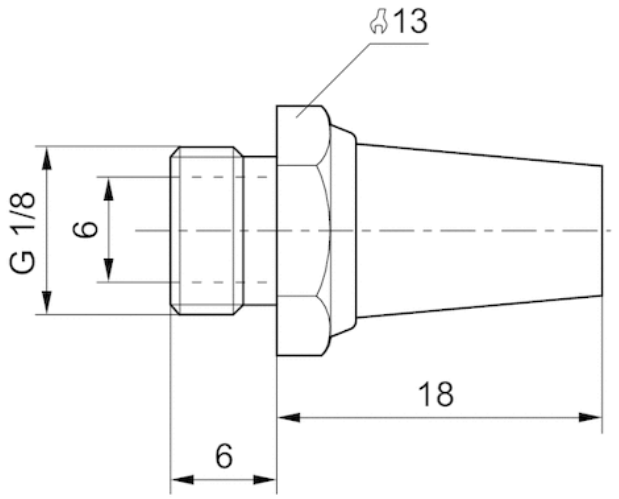

Diagrams

Flow diagram, 1827000000

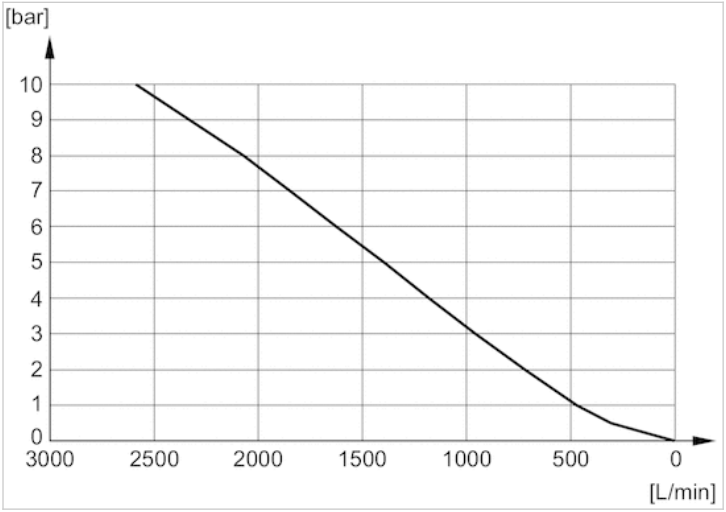

Silencers, series SI1

- G 1/4
- Sintered bronze



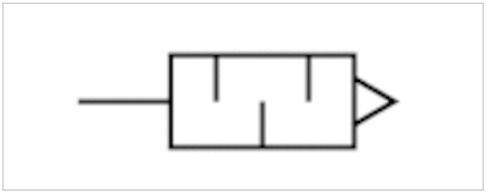

Working pressure min./max.	0 ... 10 bar
Ambient temperature min./max.	-25 ... 80 °C
Medium	Compressed air
Sound pressure level	See table below
Weight	See table below
Comment	Flow characteristic curves can be found under “Diagrams”.

Technical data

Part No.	Compressed air connection	Sound pressure level	Flow	Delivery unit	Weight
			Qn		
R412004817	G 1/4	-	5950 l/min	10 piece	0.013 kg
1827000001	G 1/4	79 dB	3390 l/min	10 piece	0.02 kg

Weight per piece

Nominal flow Qn at p1 = 6 bar (absolute) freely discharged. Sound pressure level measured at 6 bar against atmosphere at 1 m distance.

Technical information

Material	
Silencer	Sintered bronze
Thread	Brass

Dimensions

Dimensions in mm

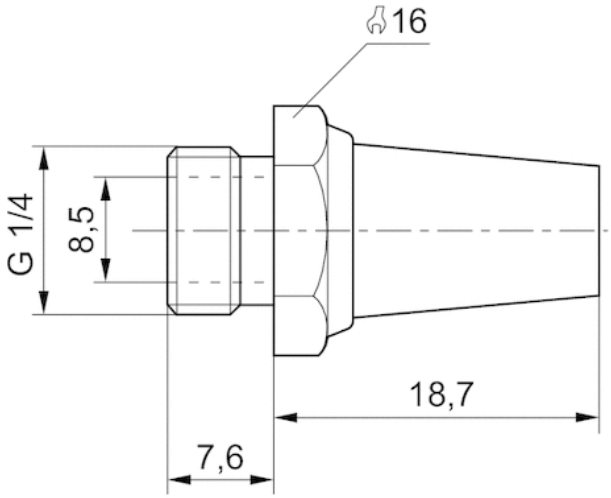

Dimensions in mm

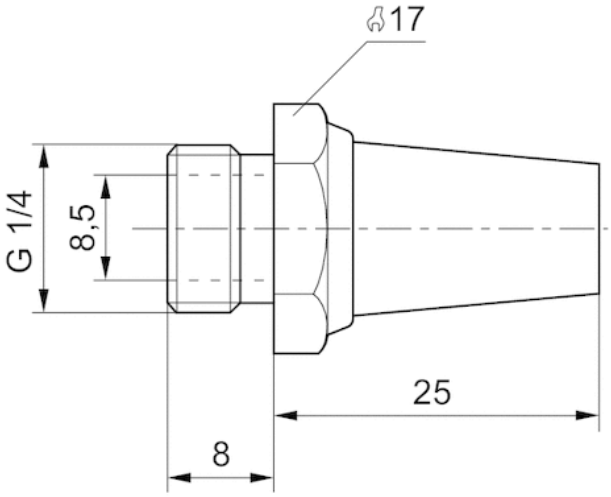

Silencers, series SI1

- G 3/8
- Sintered bronze



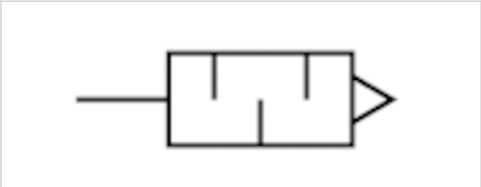

Working pressure min./max.	0 ... 10 bar
Ambient temperature min./max.	-25 ... 80 °C
Medium	Compressed air
Sound pressure level	84 dB
Weight	0.05 kg
Comment	Flow characteristic curves can be found under “Diagrams”.

Technical data

Part No.	Compressed air connection	Flow	Delivery unit
		Qn	
1827000002	G 3/8	6554 l/min	5 piece

Weight per piece

Nominal flow Qn at p1 = 6 bar (absolute) freely discharged. Sound pressure level measured at 6 bar against atmosphere at 1 m distance.

Technical information

Material	
Silencer	Sintered bronze
Thread	Brass

Dimensions

Dimensions in mm

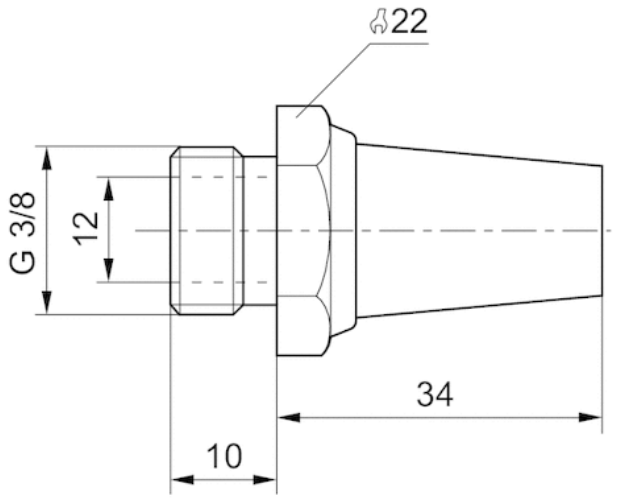

Diagrams

Flow diagram, 1827000002

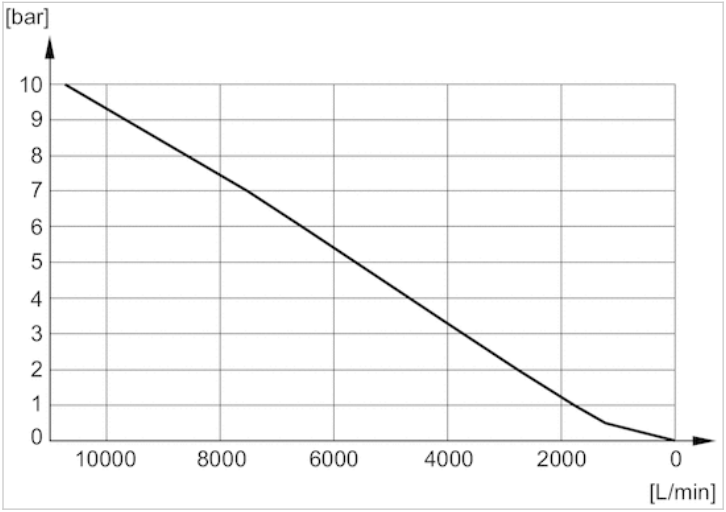

Silencers, series SI1

- G 1/2
- Sintered bronze



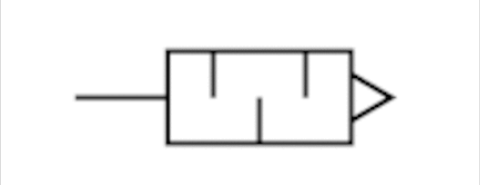

Working pressure min./max.	0 ... 10 bar
Ambient temperature min./max.	-25 ... 80 °C
Medium	Compressed air
Sound pressure level	90 dB
Weight	0.08 kg
Comment	Flow characteristic curves can be found under “Diagrams”.

Technical data

Part No.	Compressed air connection	Flow	Delivery unit
		Qn	
1827000003	G 1/2	7223 l/min	2 piece

Weight per piece

Nominal flow Qn at p1 = 6 bar (absolute) freely discharged. Sound pressure level measured at 6 bar against atmosphere at 1 m distance.

Technical information

Material	
Silencer	Sintered bronze
Thread	Brass

Dimensions

Dimensions in mm

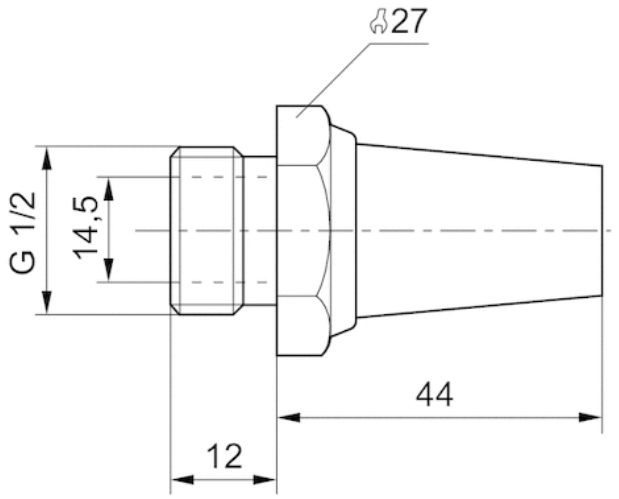

Diagrams

Flow diagram, 1827000003

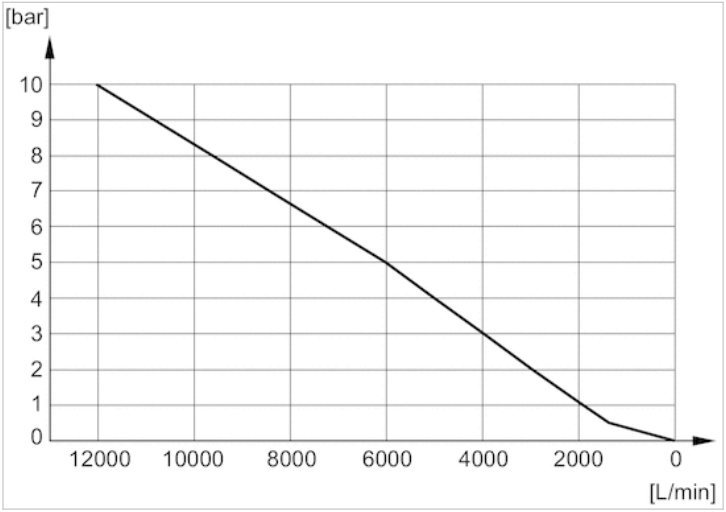

Silencers, series SI1

- G 1/8 G 1/4 G 3/8 G 1/2
- Sintered bronze



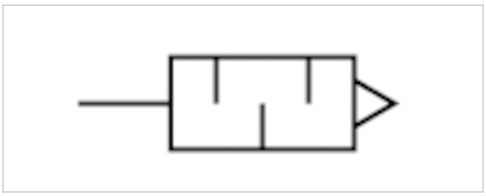

Working pressure min./max.	0 ... 10 bar
Ambient temperature min./max.	-25 ... 80 °C
Medium	Compressed air
Sound pressure level	See table below
Weight	See table below
Comment	Flow characteristic curves can be found under “Diagrams”.

Technical data

Part No.	Compressed air connection	Sound pressure level	Flow	Delivery unit	Weight
			Qn		
1827000031	G 1/8	85 dB	700 l/min	10 piece	0.001 kg
1827000033	G 1/4	88 dB	1116 l/min	10 piece	0.01 kg
1827000034	G 3/8	90 dB	1706 l/min	5 piece	0.016 kg
1827000035	G 1/2	85 dB	2568 l/min	2 piece	0.035 kg

Weight per piece

Nominal flow Qn at p1 = 6 bar (absolute) freely discharged. Sound pressure level measured at 6 bar against atmosphere at 1 m distance.

Technical information

Material	
Silencer	Sintered bronze
Thread	Brass

Dimensions

Dimensions

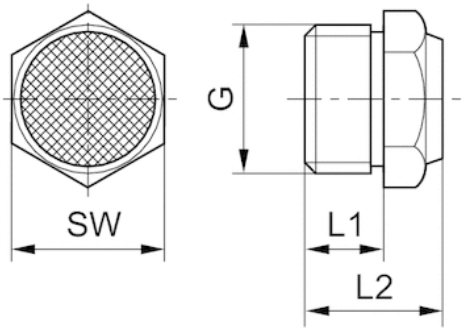

Dimensions

Part No.	Port G	L1	L2	SW
1827000031	G 1/8	6	11.5	13
1827000033	G 1/4	8	13.5	17
1827000034	G 3/8	10	17.5	22
1827000035	G 1/2	12	19.5	27

Sound pressure level measured at 6 bar at 1 m distance

Diagrams

Flow diagram, 1827000032

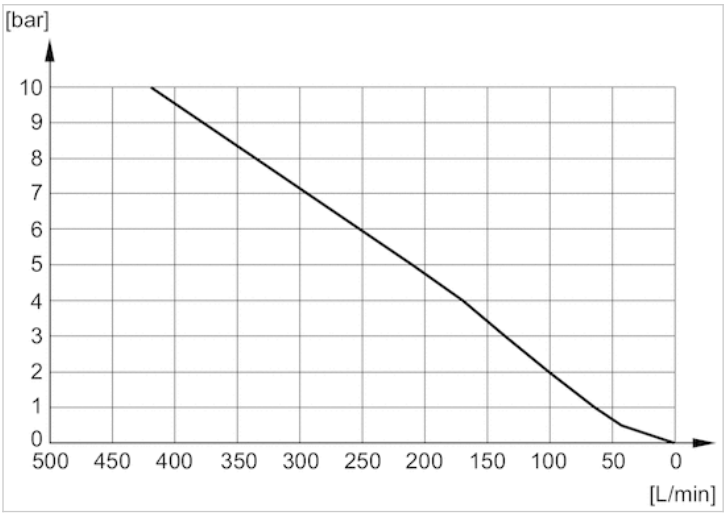

Flow diagram, 1827000031

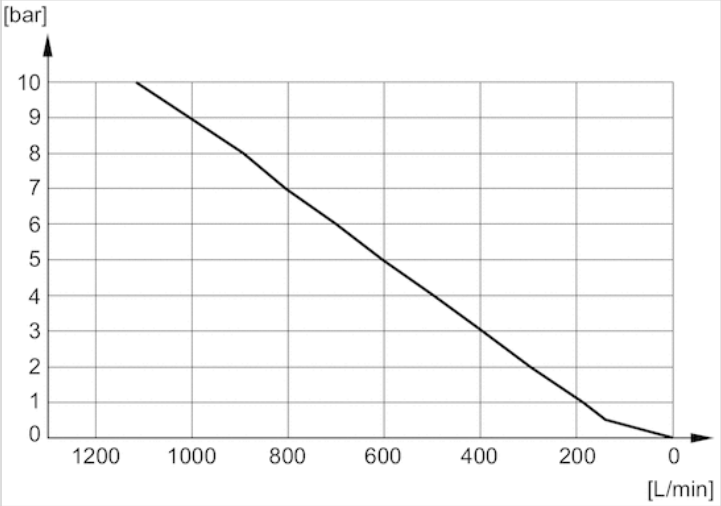

Flow diagram, 1827000033

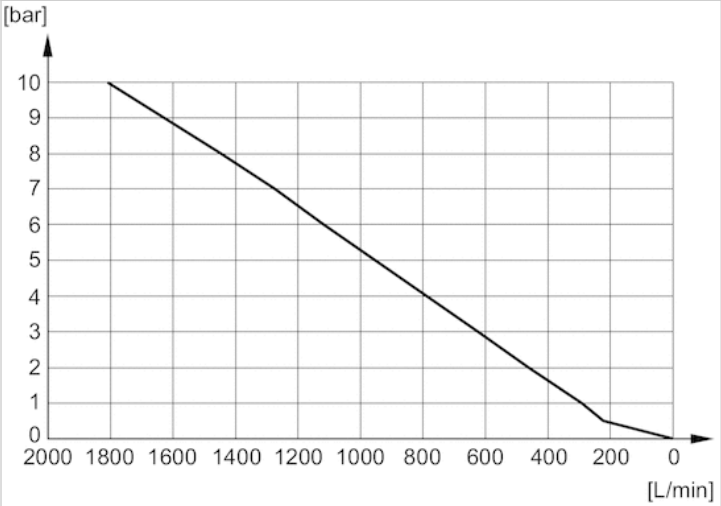

Flow diagram, 1827000034

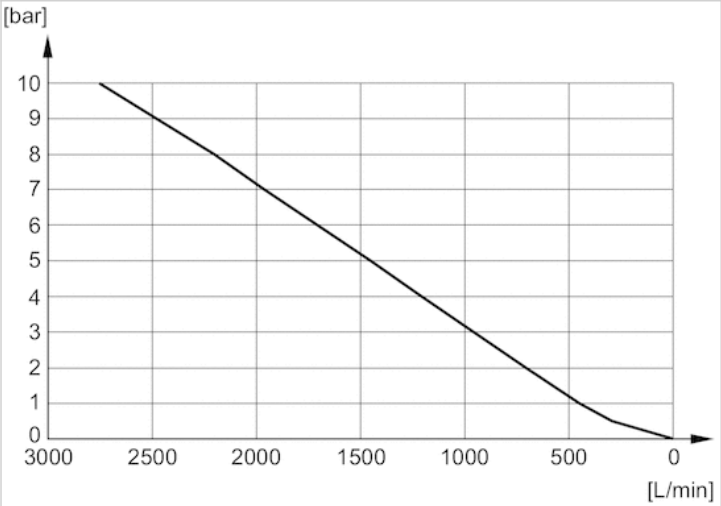

Flow diagram, 1827000035

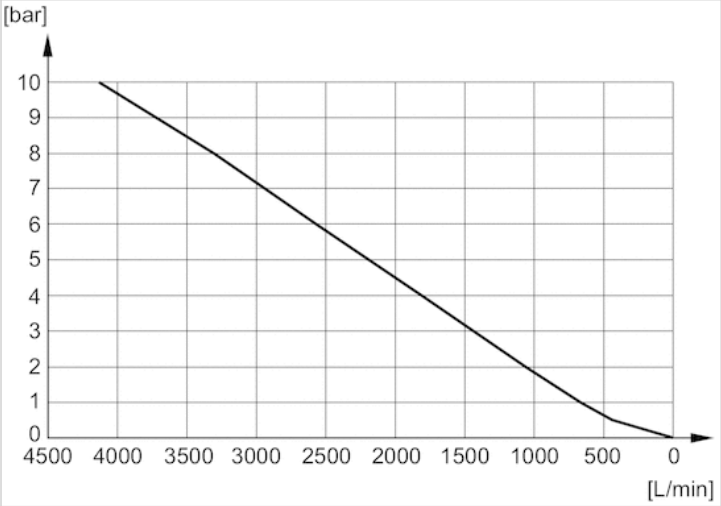

Flow diagram, 8145003400

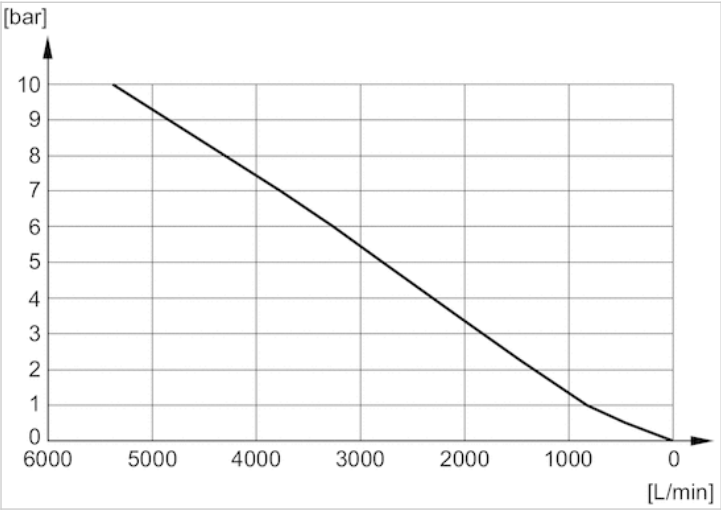

Flow diagram, 8145001000

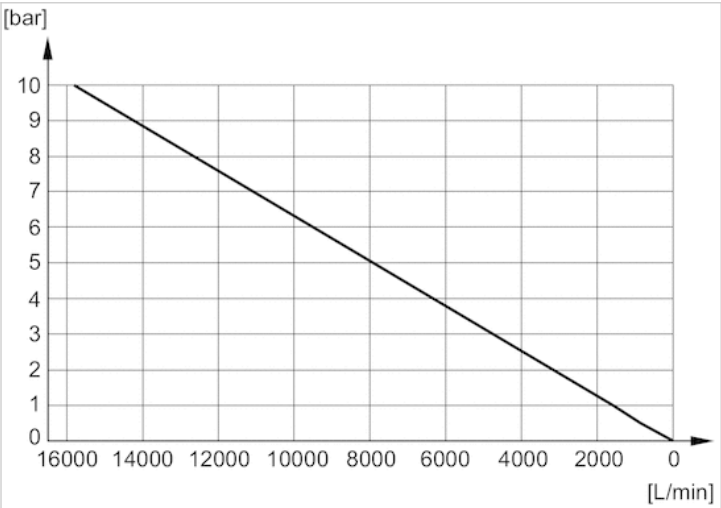

Bearing block AB7-HD, Series CM1

- Suitable for robust mechanical engineering applications, with fixed bearing
- Cylinder mounting in accordance with ISO 15552
- Suitable piston Ø 32 40 50 63 80 100 125 mm



Standards	ISO 15552

Technical data

Part No.	Piston Ø	Swivel bearing Ø
1825805275	32 mm	10 mm
1825805276	40 mm	12 mm
1825805277	50 mm	12 mm
1825805278	63 mm	16 mm
1825805279	80 mm	16 mm
1825805280	100 mm	20 mm
1825805281	125 mm	25 mm

Technical information

Material	
Material	Nodular graphite iron
	galvanized
Screws	galvanized steel

Dimensions

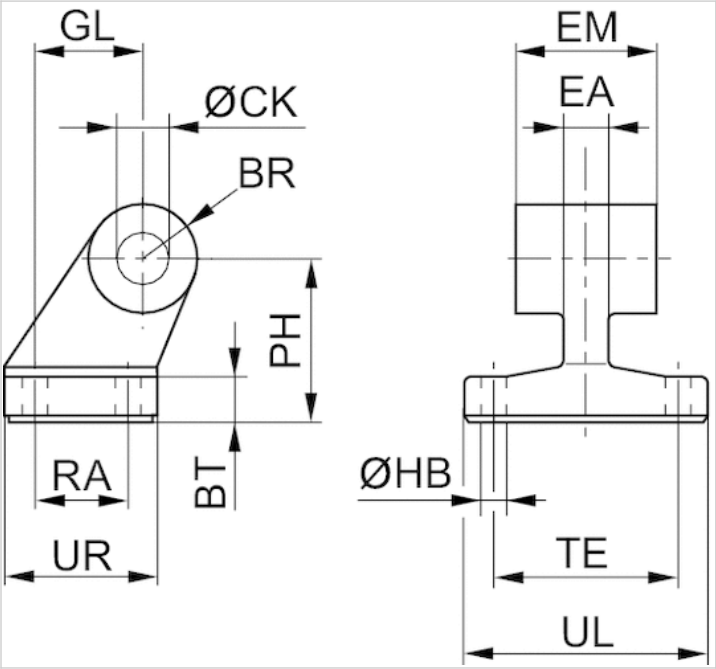

Dimensions

Part No.	Piston Ø	BR	BT	Ø CK H9	Ø HB H13	EM	GL JS14	EA max.	PH JS15
1825805275	32 mm	10	8	10	6.6	26 –0,2/–0,6	21	10	32
1825805276	40 mm	11	10	12	6.6	28 -0,2/-0,6	24	12	36
1825805277	50 mm	13	12	12	9	32 –0,2/–0,6	33	16	45
1825805278	63 mm	15	12	16	9	40 –0,2/–0,6	37	16	50
1825805279	80 mm	15	14	16	11	50 -0,2/–0,6	47	20	63
1825805280	100 mm	19	15	20	11	60 –0,2/–0,6	55	20	71
1825805281	125 mm	22,5	20	25	14	70 –0,5/–1,5	70	30	90

RA JS14	TE JS14	UL max.	UR max.
18	38	51	31
22	41	54	35
30	50	65	45
35	52	67	50
40	66	86	60
50	76	96	70
60	94	124	90

Bearing block CS7, Series CM1

- With ball joint and foot
- Cylinder mounting in accordance with VDMA 24562 part 2
- Suitable piston Ø 32 40 50 63 80 100 125 mm



Standards VDMA 24562 part 2

Technical data

Part No.	Piston Ø	Swivel bearing Ø
1827001784	32 mm	10 mm
1827001785	40 mm	12 mm
1827001786	50 mm	16 mm
1827001787	63 mm	16 mm
1827001788	80 mm	20 mm
1827001789	100 mm	20 mm
1827001790	125 mm	30 mm

Technical information

Material	
Material	Nodular graphite iron
	galvanized

Dimensions

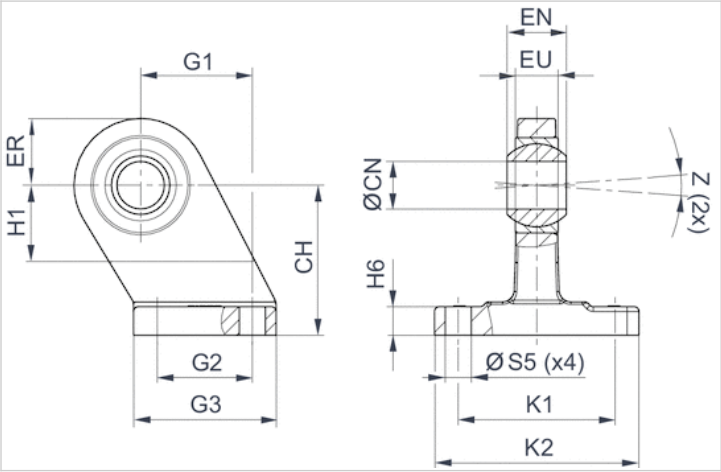

Dimensions

Part No.	Piston Ø	CH JS15	ØCN H7	EU max.	EN -1,0	ER max.	G1 JS14	G2 JS14	G3 max.
1827001784	32 mm	32	10	10.5	14	16	21	18	31
1827001785	40 mm	36	12	12	16	18	24	22	35
1827001786	50 mm	45	16	15	21	21	33	30	45
1827001787	63 mm	50	16	15	21	23	37	35	50
1827001788	80 mm	63	20	18	25	28	47	40	60
1827001789	100 mm	71	20	18	25	30	55	50	70
1827001790	125 mm	90	30	25	37	40	70	60	90

H1 min.	H6	K1 JS14	K2 max.	ØS5 H13	Z min.
16	9 ±1	38	51	6.6	4°
20	9 ±1	41	54	6.6	4°
22	11 ±1	50	65	9	4°
27	11 ±1	52	67	9	4°
31	12 ±1,5	66	86	11	4°
38	13 ±1,5	76	96	11	4°
40	17 ±1,5	94	124	14	4°

Clevis mounting AB6, Series CM1

- Cylinder mounting in accordance with ISO 15552
- Suitable piston Ø 32 40 50 63 80 100 125 mm



Standards ISO 15552

Technical data

Part No.	Piston Ø	Swivel bearing Ø
1827001593	32 mm	10 mm
1827001594	40 mm	12 mm
1827001595	50 mm	16 mm
1827002024	63 mm	16 mm
1827001597	80 mm	20 mm
1827001598	100 mm	20 mm
1827001599	125 mm	30 mm

Scope of delivery: clevis mounting incl. pivot pins and mounting screws

Technical information

Material	
Material	Aluminum (forged)
Screws	Steel
	galvanized

Dimensions

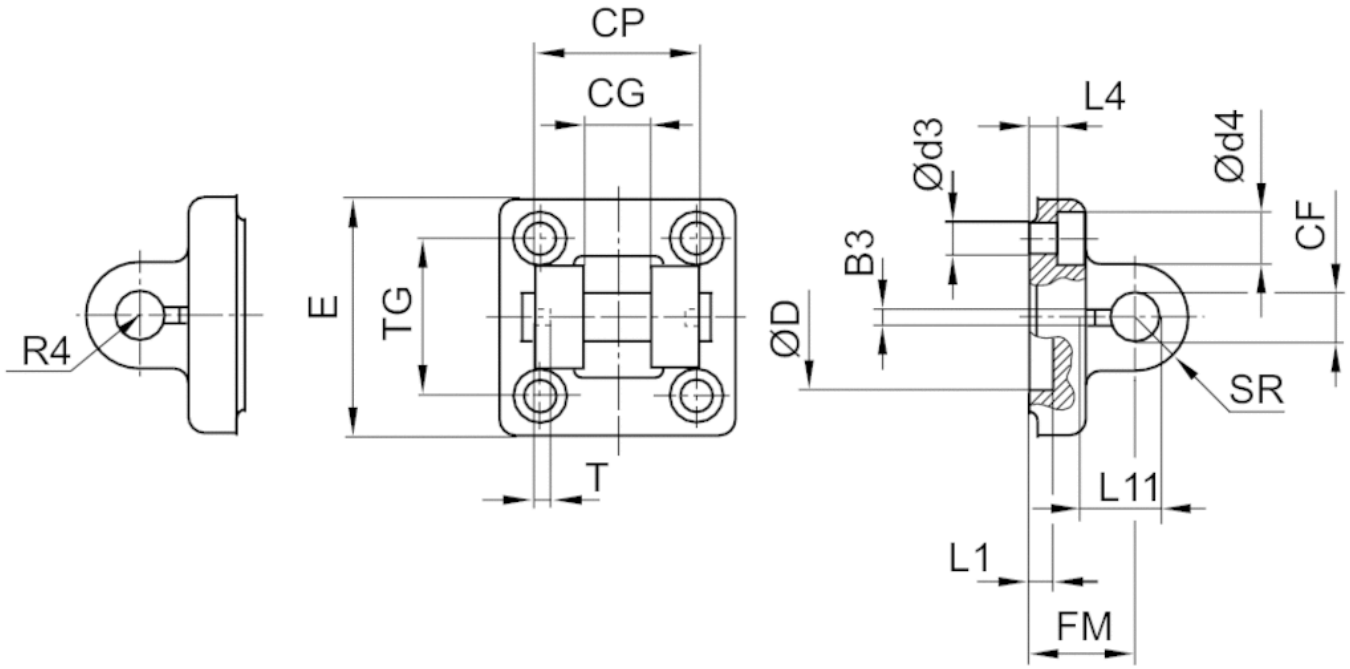

Dimensions

Part No.	Piston Ø	B3 ±0,2	Ø CF F7	CG D10	CP d12	Ø d3	Ø d4	Ø D	E	FM ±0,2
1827001593	32 mm	3.3	10	14	34	6.6	11	30	49	22
1827001594	40 mm	4.3	12	16	40	6.6	11	35	55	25
1827001595	50 mm	4.3	16	21	45	9	15	40	67	27
1827002024	63 mm	4.3	16	21	51	9	15	45	77	32
1827001597	80 mm	4.3	20	25	65	11	18	45	97	36
1827001598	100 mm	4.3	20	25	75	11	18	55	117	41
1827001599	125 mm	6.3	30	37	97	14	20	60	140	50

L1 min.	L4 ±0,5	L11 –0,5	R4	SR	T ±0,2	TG
4.5	5.5	16.5	17	11	3	32,5 ±0,2
4.5	5.5	18	20	12	4	38 ±0,2
4.5	6.5	23	22	15	4	46,5 ±0,2
4.5	6.5	23	25	15	4	56,5 ±0,2
4.5	10	27	30	20	4	72 ±0,2
4.5	10	27	32	20	4	89 ±0,2
7	10	40	42	26	6	110 ±0,3

Clevis mounting MP2-HD, Series CM1

- Suitable for robust mechanical engineering applications
- Cylinder mounting in accordance with ISO 15552
- Suitable piston Ø 32 40 50 63 80 100 125 mm



Standards ISO 15552

Technical data

Part No.	Piston Ø	Swivel bearing Ø
1827001289	32 mm	10 mm
1827001290	40 mm	12 mm
1827001291	50 mm	12 mm
1827001500	63 mm	16 mm
1827001293	80 mm	16 mm
1827001294	100 mm	20 mm
1827004862	125 mm	25 mm

Scope of delivery: clevis mounting incl. mounting screws

Technical information

Material	
Material	Aluminum (forged)
Screws	Steel
	galvanized

Dimensions

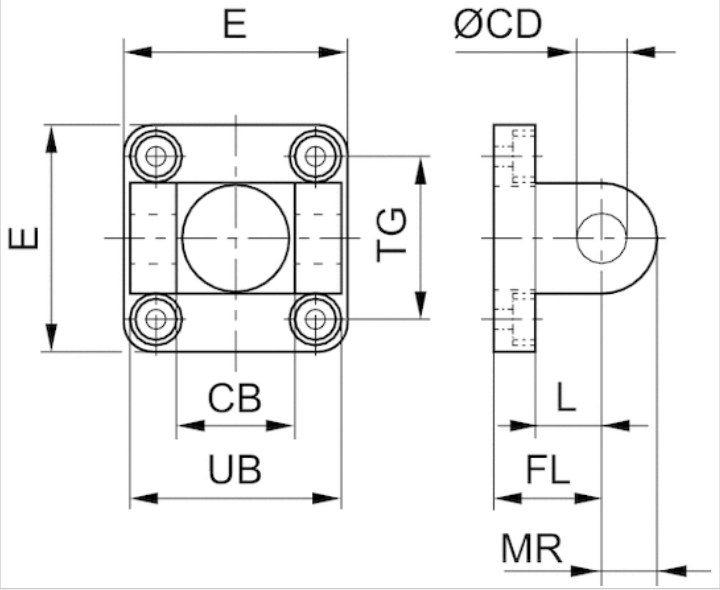

Dimensions

Part No.	Piston Ø	CB H14	Ø CD H9	E	FL ±0.2	L min.	MR max.	UB h13	TG
1827001289	32 mm	26	10	47.5	22	12	10	45	32.5 ±0.2
1827001290	40 mm	28	12	53.5	25	15	13	52	38 ±0.2
1827001291	50 mm	32	12	64	27	15	13	60	46.5 ±0.2
1827001500	63 mm	40	16	74	32	18	17	70	56.5 ±0.2
1827001293	80 mm	50	16	94	36	20	17	90	72.0 ±0.2
1827001294	100 mm	60	20	113.5	41	25	18	110	89.0 ±0.2
1827004862	125 mm	70	25	138	50	30	26	130	110 ±0.3

Rear eye MP4-HD, Series CM1

- Suitable for robust mechanical engineering applications, for clevis mounting MP2 and AB3
- Cylinder mounting in accordance with ISO 15552
- Suitable piston Ø 32 40 50 63 80 100 125 mm



Standards ISO 15552

Technical data

Part No.	Piston Ø	Swivel bearing Ø
1827001283	32 mm	10 mm
1827001284	40 mm	12 mm
1827001285	50 mm	12 mm
1827020086	63 mm	16 mm
1827001287	80 mm	16 mm
1827001288	100 mm	20 mm
1827004866	125 mm	25 mm

Scope of delivery: clevis incl. mounting screws

Technical information

Material	
Material	Aluminum (forged)
Screws	Steel
	galvanized

Dimensions

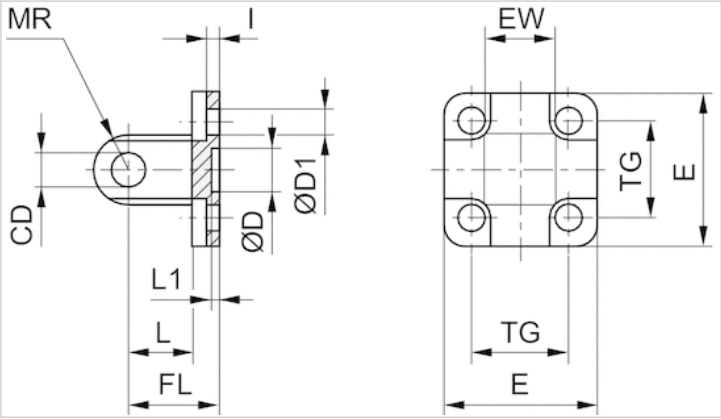

Dimensions

Part No.	Piston Ø	CD H9	Ø D	Ø D1	E	EW	FL ±0,2	I ±0,5	L min.	L1 min.
1827001283	32 mm	10	30 H11	6.6	48	26 –0,2/–0,6	22	5.5	12	4.5
1827001284	40 mm	12	35 H11	6.6	53	28 –0,2/–0,6	25	5.5	15	4.5
1827001285	50 mm	12	40 H11	9	63	32 –0,2/–0,6	27	6.5	15	4.5
1827020086	63 mm	16	45 H11	9	73	40 –0,2/–0,6	32	6.5	20	4.5
1827001287	80 mm	16	45 H11	11	98	50 –0,2/–0,6	36	10	20	4.5
1827001288	100 mm	20	55 H11	11	115	60 –0,2/–0,6	41	10	25	4.5
1827004866	125 mm	25	60 H11	14	140	70 –0,5/–1,2	50	10	30	7

MR max.	TG
10	32,5 ±0,2
12	38 ±0,2
12	46,5 ±0,2
16	56,5 ±0,2
16	72 ±0,2
20	89 ±0,2
26	110 ±0,3

Rear eye MP6, Series CM1

- With ball joint and foot
- Cylinder mounting in accordance with ISO 15552
- Suitable piston Ø 32 40 50 63 80 100 125 mm



Standards	ISO 15552
Weight	See table below

Technical data

Part No.	Piston Ø	Swivel bearing Ø	Bearing material, inner ring	Bearing material, outer ring	Weight
1827001619	32 mm	10 mm	Stainless steel	Brass with PTFE coating	0.1 kg
1827001620	40 mm	12 mm	Stainless steel	Brass with PTFE coating	0.1 kg
1827001621	50 mm	16 mm	Stainless steel	Brass with PTFE coating	0.2 kg
1827020087	63 mm	16 mm	Stainless steel	Brass with PTFE coating	0.3 kg
1827001623	80 mm	20 mm	Stainless steel	Brass with PTFE coating	0.6 kg
1827001624	100 mm	20 mm	Stainless steel	Brass with PTFE coating	0.8 kg
1827001625	125 mm	30 mm	Stainless steel	Brass with PTFE coating	1.4 kg

Scope of delivery: clevis incl. mounting screws

Technical information

Material	
Material	Aluminum (forged)
Screws	galvanized steel
Bearing	Stainless steel

Dimensions

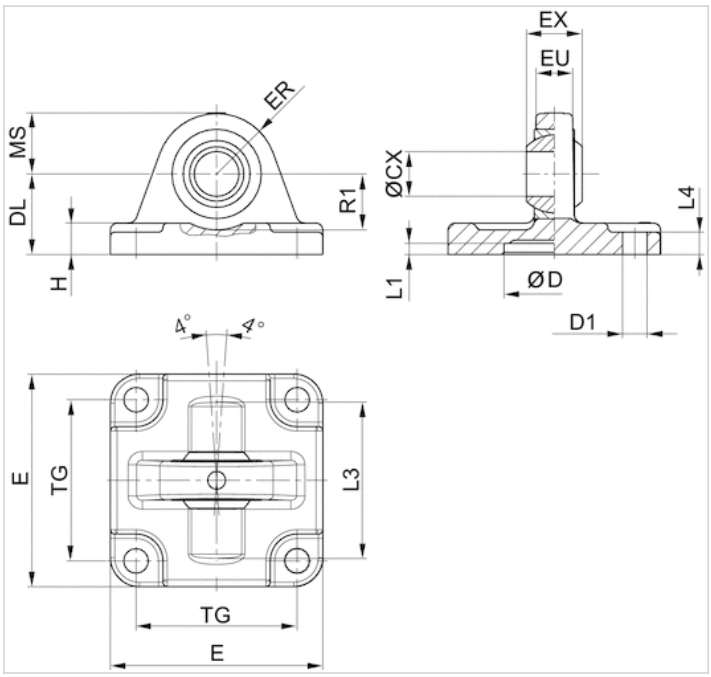

Dimensions

Part No.	Piston Ø	ØCX H7	ØD H11	ØD1 H13	DL ±0,2	E	EX –0,1	ER	EU	H	L1 min.
1827001619	32 mm	10	30	6.6	22	47	14	15	10.5	9	4.5
1827001620	40 mm	12	35	6.6	25	53	16	18	12	9	4.5
1827001621	50 mm	16	40	9	27	65	21	20	15	10.5	4.5
1827020087	63 mm	16	45	9	32	75	21	23	15	10.5	4.5
1827001623	80 mm	20	45	11	36	95	25	27	18	14	4.5
1827001624	100 mm	20	55	11	41	115	25	30	18	15	4.5
1827001625	125 mm	30	60	14	50	140	37	40	25	16	7

L3	L4	MS -0,5	R1 min.	TG
36	5.5	15	12	32,5 ±0,2
42	5.5	18	15	38 ±0,2
48	6.5	21	19	46,5 ±0,2
55	6.5	23	21	56,5 ±0,2
70	10	27	24	72 ±0,2
80	10	30	25	89 ±0,2
100	10	40	33	110 ±0,3

Rear eye MP9, Series CM1

- With rubber bushing
- Cylinder mounting in accordance with ISO 15552
- Suitable piston Ø 32 40 50 63 80 100 mm



Standards	ISO 15552
Weight	See table below

Technical data

Part No.	Piston Ø	Swivel bearing Ø	Weight	Fig.
3683203000	32 mm	10 mm	0.092 kg	Fig. 2
3683204000	40 mm	12 mm	0.143 kg	Fig. 1
3683205000	50 mm	12 mm	0.217 kg	Fig. 2
3683206000	63 mm	16 mm	0.411 kg	Fig. 1
3683208000	80 mm	16 mm	0.64 kg	Fig. 2
3683210000	100 mm	20 mm	0.956 kg	Fig. 1

Scope of delivery: clevis incl. mounting screws

Technical information

Material	
Material	Aluminum (forged)
Bearing	Bronze

Dimensions

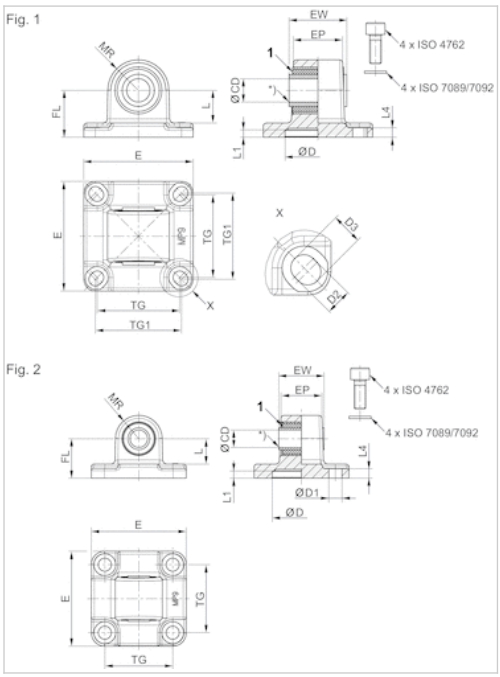

1) Rubber bushing

Dimensions

Part No.	Piston Ø	CD H11	CD H9	E	EW	EP	TG	TG1 ±0,2	FL ±0,2	L 1)	MR	L1	L4
3683203000	32 mm	10	-	46	25.5	18,9	32.5	–	22	13.8	12.5	5	5.5
3683204000	40 mm	-	12	53	27	23,5	38	40	25	16.3	15	5	5.5
3683205000	50 mm	-	12	65	31	28	46.5	–	27	17.3	16	5	6.5
3683206000	63 mm	-	16	75	39.5	33.5	56.5	59	32	22.3	21	5	6.5
3683208000	80 mm	-	16	94.5	49.5	43	72	–	36	21.8	22	5	10
3683210000	100 mm	-	20	114	59.5	54	89	90	41	25.8	25	5	10

D H11	D1 H13	D2 -0,2	D3 -0,2	Fig.
30	6.6	–	–	Fig. 2
35	–	6.6	8	Fig. 1
40	9	–	–	Fig. 2
45	6.6	–	–	Fig. 1
45	11	–	–	Fig. 2
55	–	11	11.7	Fig. 1

Trunnion mounting MT4, Series CM1

- Suitable piston Ø 32 40 50 63 80 100 125 mm
- for series PRA



Technical data

Part No.	Piston Ø
1827003991	32 mm
1827003992	40 mm
1827003993	50 mm
1827003994	63 mm
1827003995	80 mm
1827003996	100 mm
1827003997	125 mm

Technical information

Material	
Material	Aluminum (forged)

Dimensions

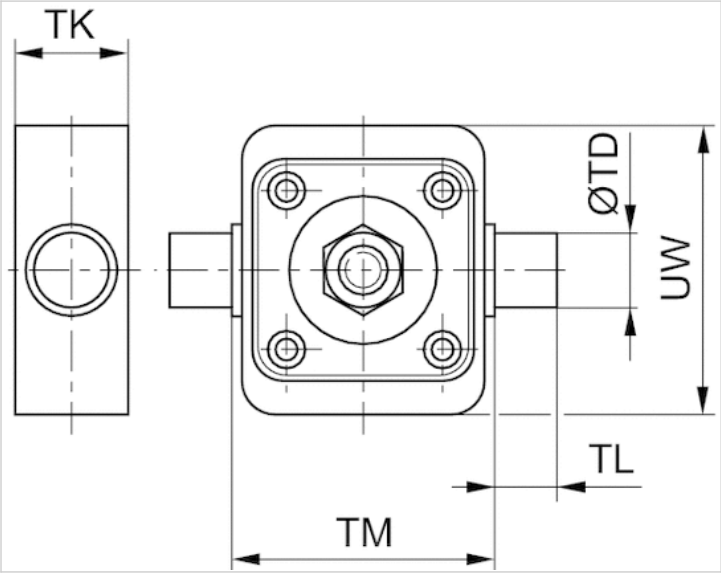

Dimensions

Part No.	Piston Ø	TD e9	TK 1)	TL h14	TM h14	UW
1827003991	32 mm	12	22	12	50	70
1827003992	40 mm	16	28	16	63	78
1827003993	50 mm	16	28	16	75	96
1827003994	63 mm	20	35	20	90	108
1827003995	80 mm	20	35	20	110	130
1827003996	100 mm	25	46	25	132	150
1827003997	125 mm	25	46	25	160	171

1) Max.

Trunnion mounting MT5, MT6, Series CM1

- for mounting to the cylinder cover or base
- Suitable piston Ø 32 40 50 63 80 100 125 mm
- for series CCI, CVI, CCL-IC/-IS, PRA/TRB CVI, CCL-IS, PRA, TRB



Weight

See table below

The delivered product may vary from that in the illustration.

Technical data

Part No.	Piston Ø	Weight
1827001609	32 mm	0.29 kg
1827001610	40 mm	0.5 kg
1827001611	50 mm	0.7 kg
1827002046	63 mm	1.1 kg
1827001613	80 mm	1.5 kg
1827001614	100 mm	2.7 kg
1827001615	125 mm	3.8 kg

Scope of delivery: trunnion mounting incl. mounting screws

Technical information

Material	
Material	Nodular graphite iron
	galvanized
Screws	Steel
	galvanized

Dimensions

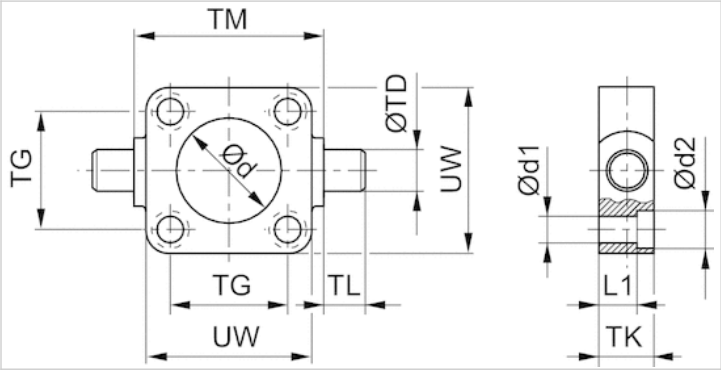

Dimensions

Part No.	Piston Ø	Ø d H11	Ø d1	Ø d2	L1	TD e9	TG ±0,2	TK	TL h14	TM h14	UW
1827001609	32 mm	30	6.6	11	7.5	12	32.5	16	12	50	48
1827001610	40 mm	35	6.6	11	7.5	16	38	20	16	63	56
1827001611	50 mm	40	9	15	10	16	46.5	24	16	75	65
1827002046	63 mm	45	9	15	10	20	56.5	24	20	90	75
1827001613	80 mm	45	11	18	16	20	72	28	20	110	100
1827001614	100 mm	55	11	18	25.5	25	89	38	25	132	120
1827001615	125 mm	60	14	20	34	25	110	46	25	160	145

Bearing, Series CM1

- for trunnion mounting
- Suitable piston Ø 32 40, 50 63, 80 100, 125 mm



Technical data

Part No.	Piston Ø	Swivel bearing Ø	Scope of delivery
3671203000	32 mm	12 mm	2 piece
3671204000	40, 50 mm	16 mm	2 piece
3671206000	63, 80 mm	20 mm	2 piece
3671210000	100, 125 mm	25 mm	2 piece

Technical information

Material	
Material	Aluminum

Dimensions

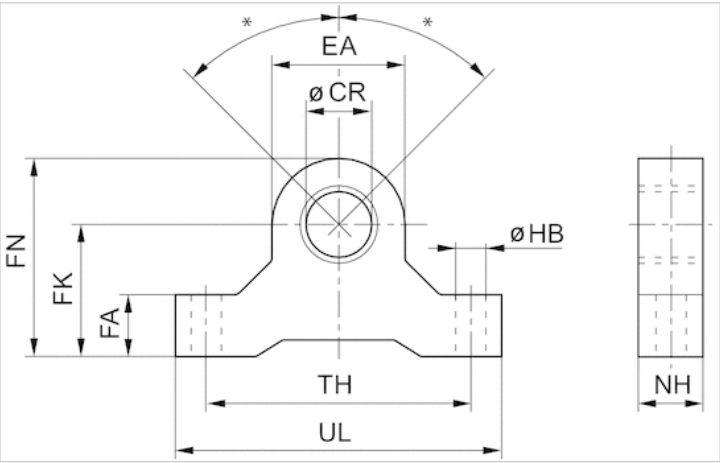

* Max. pendulum movement for cylinders with rear eye MP6 with ball joint: ±45°

Dimensions

Part No.	Ø CR H8	EA	FA	FK ±0,1	FN	HB	NH	TH	UL
3671203000	12	19	11	22	32	6.6	11	44	55
3671204000	16	28	16	35	49	9	16	65	82
3671206000	20	38	19	40	59	9	19	80	99
3671210000	25	46	22	48	71	11	22	96	118

Bearing AT4, Series CM1

- for trunnion mounting MT4, MT5, MT6
- Cylinder mounting in accordance with ISO 15552
- Suitable piston Ø 20, 25, 32 40, 50 63, 80 100, 125 mm
- for series CCI, CCL-IC, ICL, KPZ, PRA/TRB CCI, CCL-IC, KPZ, PRA/TRB



Standards	ISO 15552

Technical data

Part No.	Piston Ø	Swivel bearing Ø	Scope of delivery
1827001603	20, 25, 32 mm	12 mm	2 piece
1827001604	40, 50 mm	16 mm	2 piece
1827001605	63, 80 mm	20 mm	2 piece
1827001606	100, 125 mm	25 mm	2 piece

Technical information

Material	
Material	Steel
	galvanized
Guide bushing	Sintered bronze

Dimensions

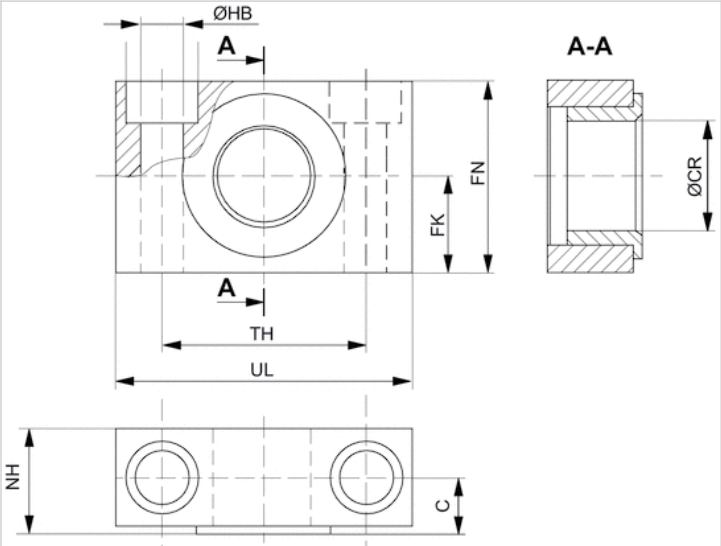

Dimensions

Part No.	Piston Ø	UL	NH	TH	C	CR H9	HB H13	FN	FK	Plain bearing
1827001603	20, 25, 32 mm	46	18	32 ±0,2	10.5	12	6.6	30	15 ±0,1	Sintered bronze
1827001604	40, 50 mm	55	21	36 ±0,2	12	16	9	36	18 ±0,1	Sintered bronze
1827001605	63, 80 mm	65	23	42 ±0,2	13	20	11	40	20 ±0,1	Sintered bronze
1827001606	100, 125 mm	75	28.5	50 ±0,2	16	25	14	50	25 ±0,1	Sintered bronze

Flange mounting MF1, MF2, Series CM1

- Cylinder mounting in accordance with ISO 15552
- Suitable piston Ø 32 40 50 63 80 100 125 mm



Standards ISO 15552

Technical data

Part No.	Piston Ø	Swivel bearing Ø
1827001277	32 mm	30 mm
1827001278	40 mm	35 mm
1827001279	50 mm	40 mm
1827001499	63 mm	45 mm
1827001281	80 mm	45 mm
1827001282	100 mm	55 mm
1827004861	125 mm	60 mm

Scope of delivery: flange mounting incl. mounting screws

Technical information

Material	
Material	Steel
	galvanized
Screws	Steel
	galvanized

Dimensions

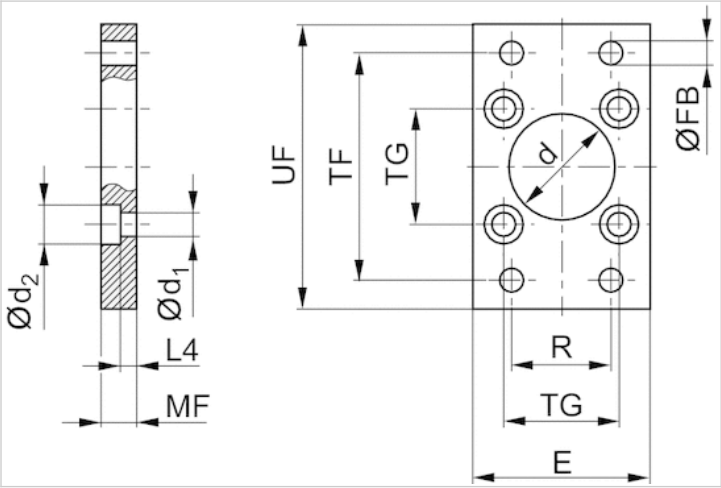

Dimensions

Part No.	Piston Ø	Ød H11	Ød1	Ød2	E max.	ØFB	L4	MF	R	TF	TG	UF
1827001277	32 mm	30	6.6	11	50	7	4.5	10	32	64	32,5 ±0,2	80
1827001278	40 mm	35	6.6	11	55	9	4.5	10	36	72	38 ±0,2	90
1827001279	50 mm	40	9	15	65	9	6	12	45	90	46,5 ±0,2	110
1827001499	63 mm	45	9	15	75	9	6	12	50	100	56,5 ±0,2	125
1827001281	80 mm	45	11	18	100	12	9	16	63	126	72 ±0,2	154
1827001282	100 mm	55	11	18	120	14	9	16	75	150	89 ±0,2	186
1827004861	125 mm	60	14	20	140	16	10.5	20	90	180	110 ±0,3	220

Intermediate flange JP1, Series CM1

- for multi-position cylinders
- Suitable piston Ø 32 40 50 63 80 100 125 mm



Technical data

Part No.	Piston Ø
1827020247	32 mm
1827020248	40 mm
1827020249	50 mm
1827020250	63 mm
1827020251	80 mm
1827020252	100 mm
1827020253	125 mm

Scope of delivery incl. mounting screws

Technical information

Material	
Material	Aluminum

Dimensions

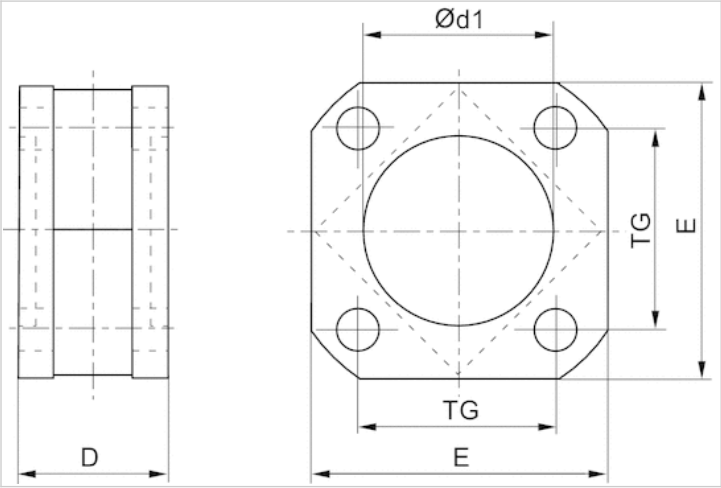

Dimensions

Part No.	Piston Ø	D	Ø d1 N7	E	TG
1827020247	32 mm	27	30	47	32.5
1827020248	40 mm	27	35	53	38
1827020249	50 mm	32	40	65	46.5
1827020250	63 mm	28	45	75	56.5
1827020251	80 mm	38	45	95	72
1827020252	100 mm	38	55	115	89
1827020253	125 mm	44	60	140	110

Foot mounting MS1, Series CM1

- to mount on cylinder PRA, TRB, CCL-IS/-IC, CCI, KPZ, 167, CVI, ITS
- Cylinder mounting in accordance with ISO 15552
- Suitable piston Ø 32 40 50 63 80 100 125 mm



Standards ISO 15552

Technical data

Part No.	Piston Ø	For series
1827001271	32 mm	PRA/TRB CCL-IC/-IS CCI CVI
1827001272	40 mm	PRA/TRB CCL-IC/-IS CCI CVI
1827001273	50 mm	PRA/TRB CCL-IC/-IS CCI CVI
1827001498	63 mm	PRA/TRB CCL-IC/-IS CCI CVI
1827001275	80 mm	PRA/TRB CCL-IC/-IS CCI CVI
1827001276	100 mm	CCI CCL-IC/-IS PRA/TRB CVI
1827001310	125 mm	PRA/TRB CCL-IS CVI

Scope of delivery: 2 foot mountings incl. mounting screws

Technical information

Material	
Material	Steel
	galvanized
Screws	Steel
	galvanized

Dimensions

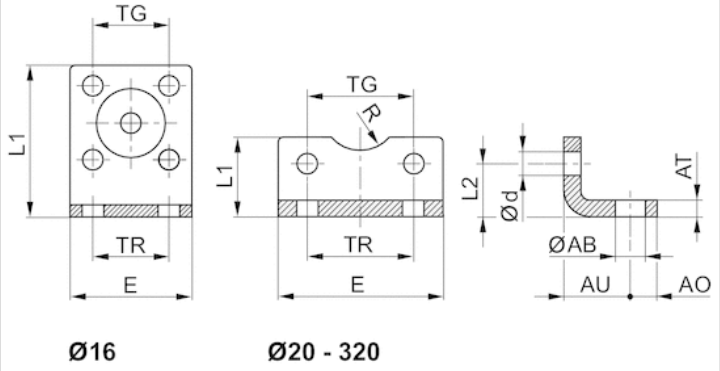

Dimensions

Part No.	Piston Ø	ØAB	AO	AT	AU ±0,2	Ød	E	L1	L2	R	TG	TR
1827001271	32 mm	7	8	4 ±0,3	24	6.6	48	25	15.5	15	32,5 ±0,2	32
1827001272	40 mm	10	10	4 ±0,3	28	6.6	56	26	17	17.5	38 ±0,2	36
1827001273	50 mm	10	11	5 ±0,3	32	9	68	32	21.5	20	46,5 ±0,2	45
1827001498	63 mm	10	13	5 ±0,3	32	9	78	34	21.5	22.5	56,5 ±0,2	50
1827001275	80 mm	12	16	6 ±0,5	41	11	98	47	27	22.5	72 ±0,2	63
1827001276	100 mm	14.5	19	6 ±0,5	41	11	117	52	26.5	27.5	89 ±0,2	75
1827001310	125 mm	16.5	20	8 ±1,0	45	13.5	144	69	35	30	110 ±0,3	90

Bolts AA4, Series CM1

- Cylinder mounting in accordance with ISO 15552
- Suitable piston Ø 32 40 50 63 80 100 125 mm



Standards	See table below
Weight	See table below

Technical data

Part No.	Piston Ø	Standardization	Weight	Fig.
1823120020	32 mm	-	0.03 kg	Fig. 1
1823120021	40 mm	-	0.05 kg	Fig. 1
1823120022	50 mm	-	0.06 kg	Fig. 1
1823120023	63 mm	-	0.12 kg	Fig. 1
1823120024	80 mm	-	0.15 kg	Fig. 1
1823120025	100 mm	-	0.29 kg	Fig. 1
5236000092	125 mm	ISO 15552	0.53 kg	Fig. 2

Scope of delivery: pivot pins incl. circlips

Technical information

Material	
Material	Steel
	galvanized

Dimensions

Fig. 1

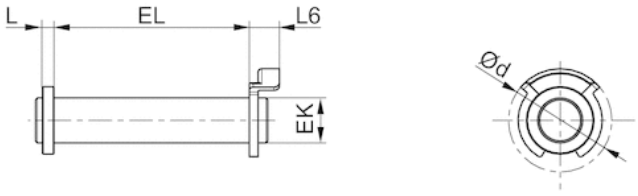

Fig. 2

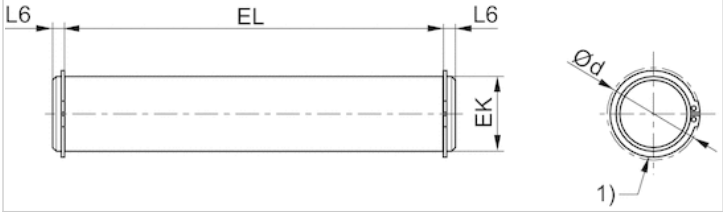

1) circlip DIN 471

Dimensions

Part No.	Piston Ø	Fig.	Ø d max.	EK e8	EL	L max.	L6 max.
1823120020	32 mm	Fig. 1	20	10	45.2 +0,3	3.5	9
1823120021	40 mm	Fig. 1	22	12	52.2 +0,3	4	9
1823120022	50 mm	Fig. 1	22	12	60.2 +0,3	4	9
1823120023	63 mm	Fig. 1	28	16	70.2 +0,3	4.5	11
1823120024	80 mm	Fig. 1	28	16	90.2 +0,3	4.5	11
1823120025	100 mm	Fig. 1	38	20	110.2 +0,3	5	11
5236000092	125 mm	Fig. 2	34.2	25	132 +0,5	-	3.75

Guide unit GU1, Series CG1

- Ø 32-100 mm
- Plain bearing
- For standard cylinders ISO 15552



Bearing type	Plain bearing
Ambient temperature min./max.	-20 ... 80 °C

Technical data

Suitable piston Ø	32 mm	40 mm	50 mm	63 mm	80 mm	100 mm
Stroke 50	0821401010	0821401020	0821401030	0821401480	0821401050	0821401060
100	0821401011	0821401021	0821401031	0821401481	0821401051	0821401061
160	0821401012	0821401022	0821401032	0821401482	0821401052	0821401062
200	0821401013	0821401023	0821401033	0821401483	0821401053	0821401063
250	0821401014	0821401024	0821401034	0821401484	0821401054	0821401064
320	0821401015	0821401025	0821401035	0821401485	0821401055	0821401065
400	0821401016	0821401026	0821401036	0821401486	0821401056	0821401066
500	0821401017	0821401027	0821401037	0821401487	0821401057	0821401067
600	0821401018	0821401028	0821401038	0821401488	0821401058	0821401068
800	0821401019	0821401029	0821401039	0821401489	0821401059	0821401069
1000	0821401500	0821401502	0821401504	0821401490	0821401508	0821401510
1200	0821401501	0821401503	0821401505	0821401491	0821401509	0821401511

For use with hybrid inch cylinders with metric piston rod thread

Technical data

Suitable piston Ø	32 mm	40 mm	50 mm	63 mm	80 mm	100 mm
Weight 0 mm stroke	0.63 kg	0.946 kg	1.36 kg	1.66 kg	3.45 kg	4.69 kg
+10 mm stroke	0.012 kg	0.018 kg	0.018 kg	0.018 kg	0.022 kg	0.022 kg

Technical information

Material	
Bearing housings	Aluminum, colorless anodized
Bearing type	Sintered bronze
Carrying plate	Aluminum, colorless anodized

Material	
Flexible coupling in carrying plate	Stainless steel
Guide rods	Hardened heat-treated steel, ground

Dimensions

Ø 32 ... 100 mm

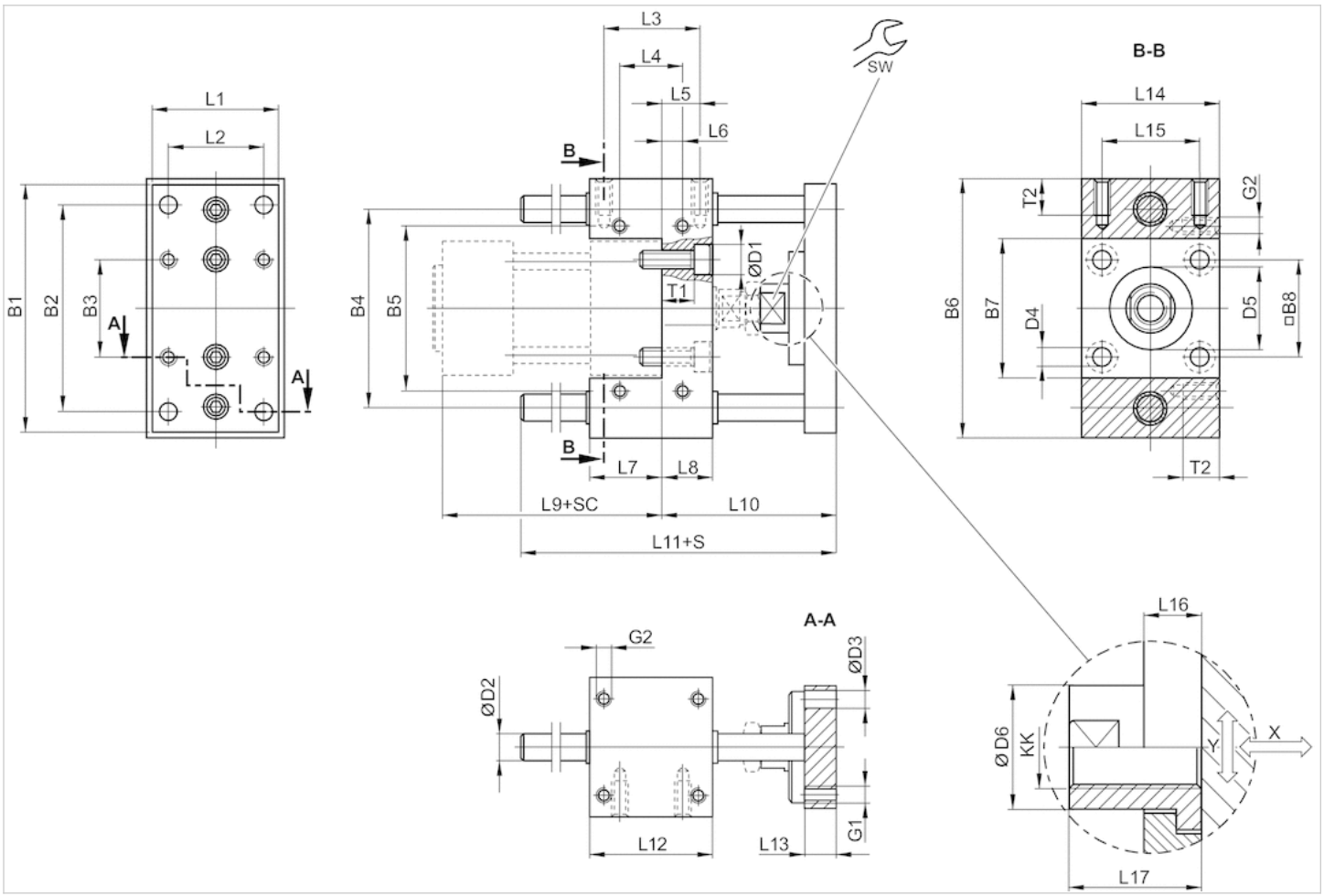

S = stroke
SC = cylinder stroke
X = max. play (axial)
Y = min. play (radial)

Dimensions

Piston Ø	B1	B2	B3	B4	B5	B6	B7	B8	D1	D2	D3	D4	D5	D6	G1	G2	KK	L1
32 mm	90	78	32.5	74	58	100	48	32.5	11	10	6.6	6.6	30 M8	18	M6	M6	M10x1,25	45
40 mm	100	84	38	80	64	106	54	38	11	12	6.6	6.6	35 M8	18	M6	M6	M12x1,25	50
50 mm	120	100	46.5	96	80	125	66	46.5	15	12	9	9	40 M8	24	M8	M8	M16x1,5	60
63 mm	125	105	56.5	104	95	132	76	56.5	15	12	9	9	45 M8	24	M8	M8	M16x1,5	70
80 mm	155	130	72	130	130	165	98	72	18	16	11	11	45 M8	30	M10	M10	M20x1,5	90
100 mm	175	150	89	150	150	185	118	89	18	16	11	11	55 M8	30	M10	M10	M20x1,5	110

Piston Ø	L2	L3	L4	L5	L6	L7	L8	L9	L10	L11	L12	L13	L14	L15	L16	L17	SW	T1	T2
32 mm	32.5	32.5	32.5	9.25	9.25	31	17	94	69	106	48	12	48	32.5	14	22	15	10	14
40 mm	38	38	38	11	11	37	21	105	74	117	58	12	56	38	14	22	15	14	14
50 mm	46.5	46.5	46.5	18.75	18.75	34	25	106	89	129	59	15	66	46.5	14	26	22	16	16
63 mm	56.5	56.5	56.5	15.25	15.25	51	25	121	89	146	76	15	76	56.5	14	26	22	16	16
80 mm	72	72	50	25	14	56	34	128	106	170	90	16	98	72	14	32	27	24	20
100 mm	89	89	70	28.5	19	71	39	138	111	190	110	16	118	89	14	32	27	29	20

Diagrams

Useful load

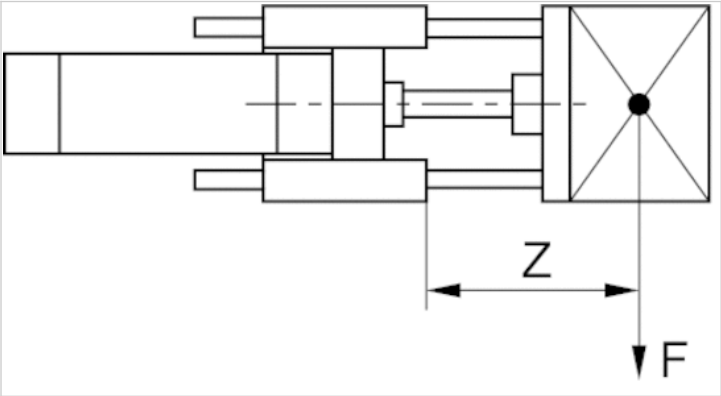

F = Useful load, Z = Projection

Useful load

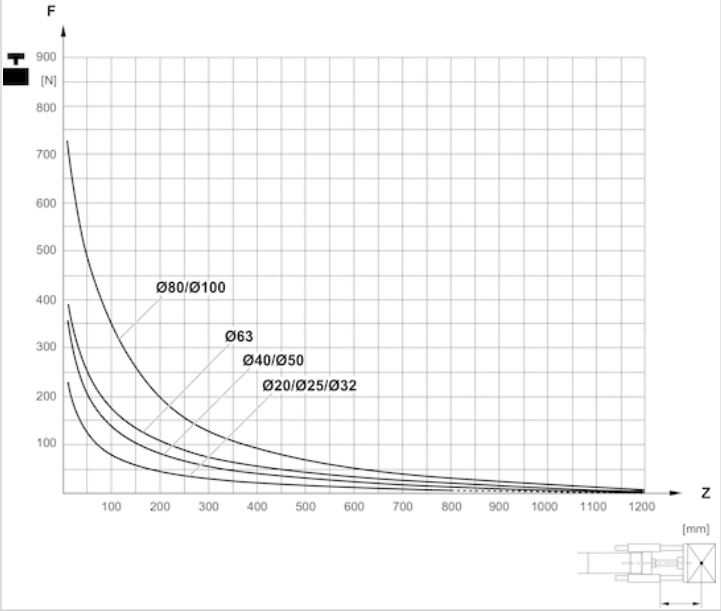

F = Useful load, Z = Projection

Guide unit GH1, Series CG1

- Ø 32-100 mm
- Plain bearing
- For standard cylinders ISO 15552



Bearing type	Plain bearing
Ambient temperature min./max.	-20 ... 80 °C

Technical data

Suitable piston Ø	32 mm	40 mm	50 mm	63 mm	80 mm	100 mm
Stroke 50	0821401220	0821401230	0821401240	0821401280	-	-
100	0821401221	0821401231	0821401241	0821401281	0821401260	0821401270
160	0821401222	0821401232	0821401242	0821401285	-	-
200	0821401223	0821401233	0821401243	0821401282	0821401261	0821401271
250	0821401224	0821401234	0821401244	0821401286	-	-
320	0821401225	0821401235	0821401245	0821401283	0821401262	0821401272
400	0821401226	0821401236	0821401246	0821401287	-	-
500	0821401227	0821401237	0821401247	0821401284	0821401263	0821401273
600	0821401228	0821401238	0821401249	0821401288	0821401264	0821401274
800	0821401229	0821401239	0821401474	0821401289	0821401265	0821401275
1000	0821401470	0821401472	0821401475	0821401290	0821401266	0821401276
1200	0821401471	0821401473	0821401476	0821401291	0821401267	0821401277

Inch dimensions rounded to the nearest whole number., For use with hybrid inch cylinders with metric piston rod thread

Technical data

Suitable piston Ø	32 mm	40 mm	50 mm	63 mm	80 mm	100 mm
Weight 0 mm stroke	1.3 kg	2.3 kg	3.7 kg	4.7 kg	8.8 kg	11.1 kg
+10 mm stroke	0.009 kg	0.016 kg	0.025 kg	0.025 kg	0.039 kg	0.039 kg

Technical information

Material	
Bearing housings	Aluminum, colorless anodized
Bearing type	Sintered bronze
Carrying plate	Aluminum, colorless anodized

Material	
Flexible coupling in carrying plate	Stainless steel
Guide rods	Hardened heat-treated steel, ground

Dimensions

Ø 32 ... 100 mm

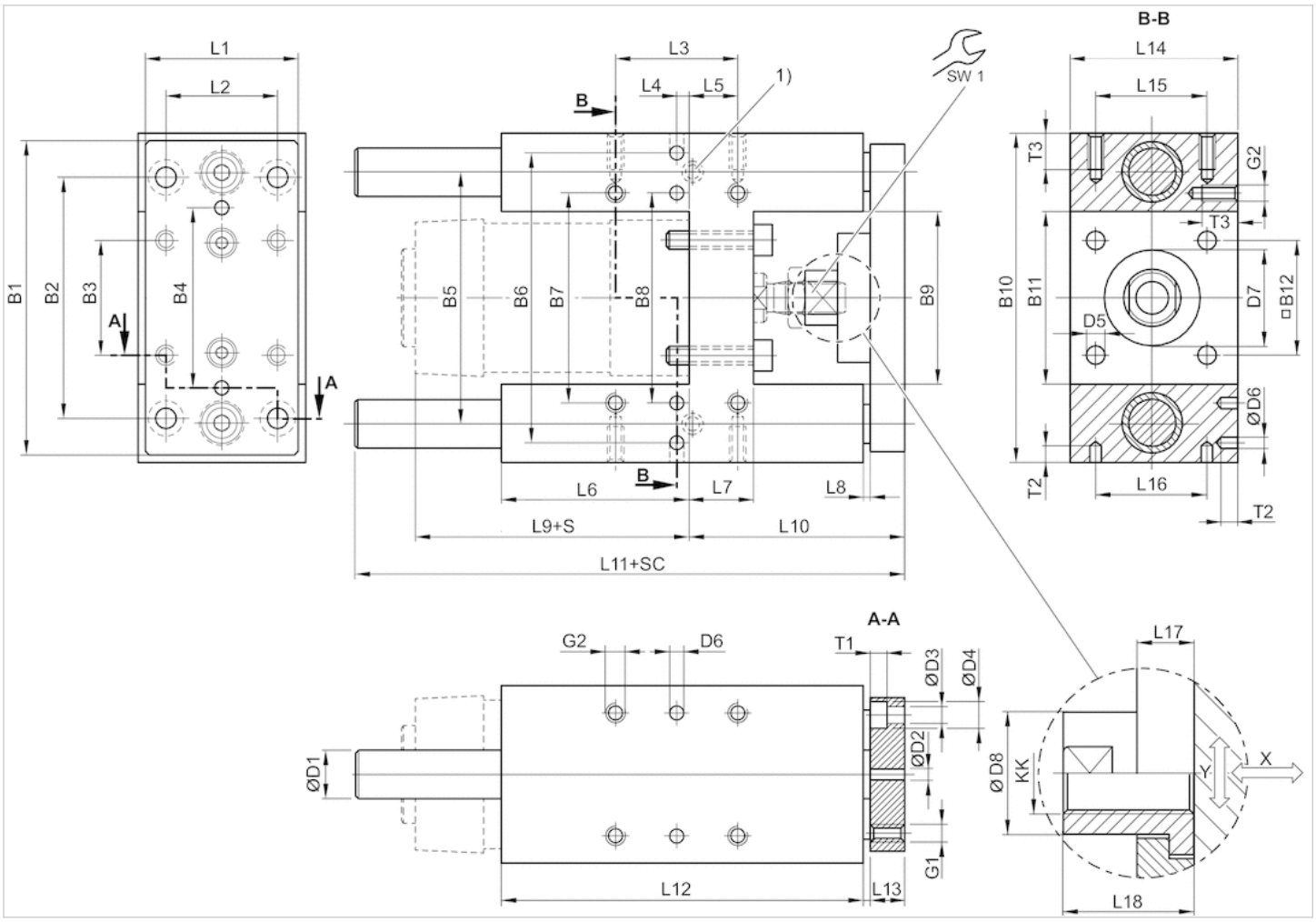

1) Lube nipple
S = stroke
SC = cylinder stroke
X = max. play (axial)
Y = min. play (radial)

Dimensions

Piston Ø	B1	B2	B3	B4	B5	B6	B7	B8	B9	B10	B11	B12	D1	D2 H7	D3	D4	D5	D6 H7
32 mm	90	78	32.5	50	74	81	61	61	50.2	97	50.2	32.5	12	6	6.6	11	6.6	6
40 mm	110	84	38	54	87	99	69	69	58.2	115	58.2	38	16	6	6.6	11	6.6	6
50 mm	130	100	46.5	72	104	119	85	85	70.2	137	70.2	46.5	20	6	9	15	9	6
63 mm	145	105	56.5	82	119	132	100	100	85.2	152	85.2	56.5	20	6	9	15	9	6
80 mm	180	130	72	106	148	166	130	130	105.4	189	105.4	72	25	6	11	18	11	6
100 mm	200	150	89	131	172	190	150	150	130.4	213	130.4	89	25	6	11	18	11	6

Piston Ø	D7 M8	D8	G1	G2	KK	L1	L2	L3	L4	L5	L6	L7	L8	L9	L10	L11	L12
32 mm	30	14.5	M6	M6	M10x1,25	45	32.5	32.5	12	4.25	76	17	3	94	64	177.5	125
40 mm	35	18	M6	M6	M12x1,25	54	38	38	8	11	81	21	3	105	74	192.5	140
50 mm	40	24	M8	M8	M16x1,5	63	46.5	46.5	4.5	18.75	79	26	3	106	89	205	150
63 mm	45	24	M8	M8	M16x1,5	80	56.5	56.5	13	15.25	111	26	3	121	89	237	182
80 mm	45	30	M10	M10	M20x1,5	100	72	72	15	21	128	34	3	128	110	280	215
100 mm	55	30	M10	M10	M20x1,5	120	89	89	20	24.5	128	39	3	138	115	280	220

Piston Ø	L13	L14	L15	L16	L17	L18	T1	T2	T3	SW1
32 mm	12	50	32.5	32.5	6	17	6.5	10	15	13
40 mm	12	58	38	38	14	22	6.5	10	15	15
50 mm	15	70	46.5	46.5	14	26	9	10	16	22
63 mm	15	85	56.5	56.5	14	26	9	10	16	22
80 mm	20	105	72	72	14	32	11	10	20	27
100 mm	20	130	89	89	14	32	11	10	20	27

Diagrams

Useful load

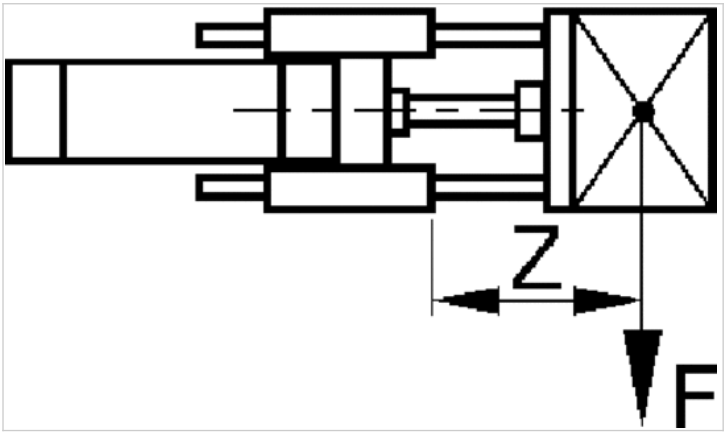

F = Useful load, Z = Projection

Useful load

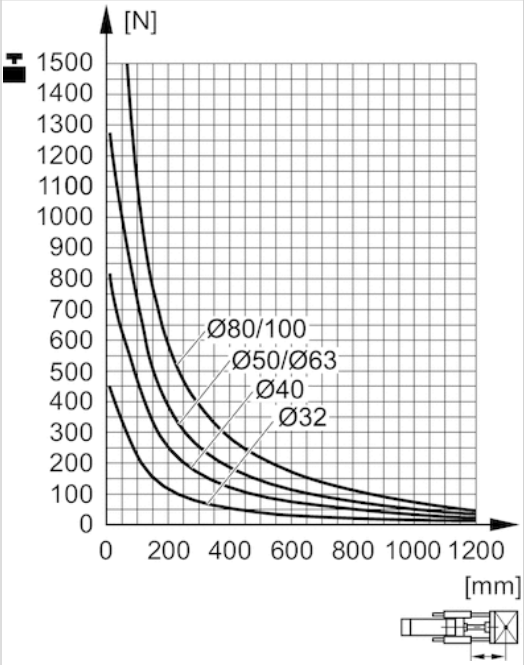

F = Useful load, Z = Projection

Bending due to own load

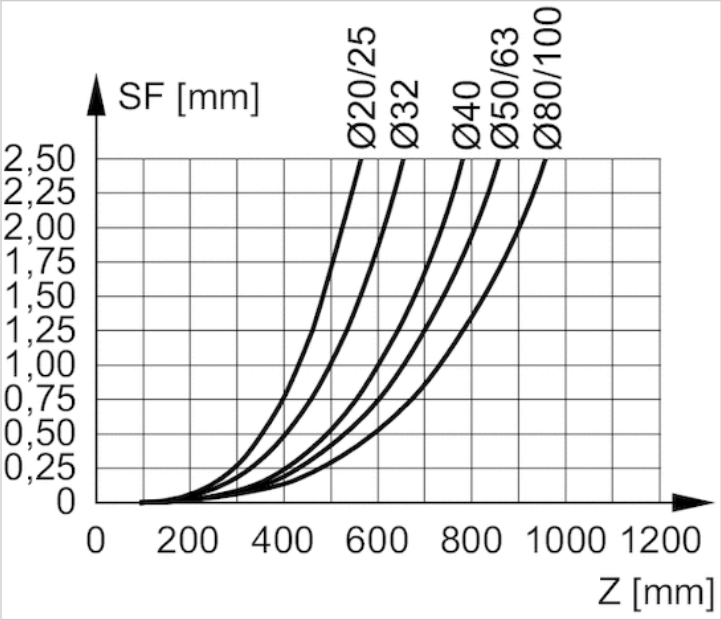

F = useful load (at the load center), SF = bending, Z = projection

Bending due to 10 N load

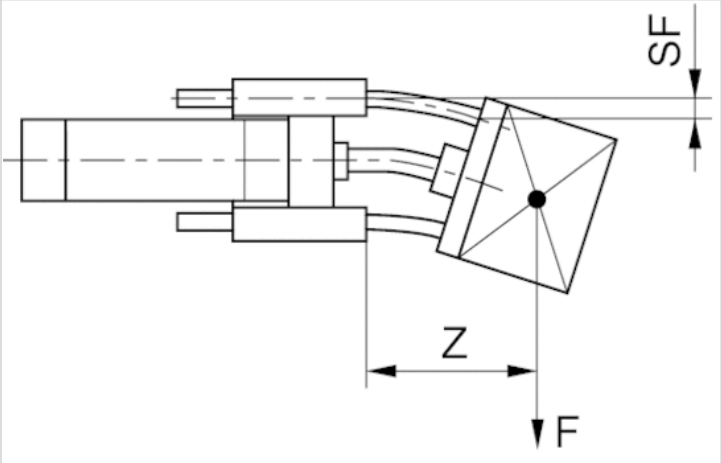

F = useful load (at the load center), SF = bending, Z = projection

Bending due to 10 N load

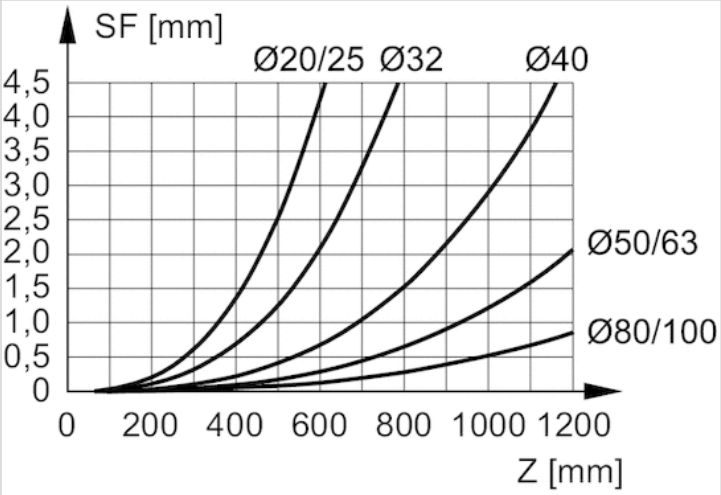

F = useful load (at the load center), SF = bending, Z = projection

Guide unit GH2, Series CG1

- Ø 32-100 mm
- Linear ball bearing
- For standard cylinders ISO 15552



Bearing type	Linear ball bearing
Ambient temperature min./max.	-20 ... 80 °C

Technical data

Suitable piston Ø	32 mm	40 mm	50 mm	63 mm	80 mm	100 mm
Stroke 50	0821401320	0821401330	0821401340	0821401380	-	-
100	0821401321	0821401331	0821401341	0821401381	0821401360	0821401370
200	0821401322	0821401332	0821401342	0821401382	0821401361	0821401371
320	0821401323	0821401333	0821401343	0821401383	0821401362	0821401372
500	0821401324	0821401334	0821401344	0821401384	0821401363	0821401373
600	0821401325	0821401335	0821401345	0821401385	0821401364	0821401374
800	0821401326	0821401336	0821401346	0821401386	0821401365	0821401375
1000	0821401327	0821401337	0821401347	0821401387	0821401366	0821401376
1200	0821401328	0821401338	0821401348	0821401388	0821401367	0821401377

For use with hybrid inch cylinders with metric piston rod thread

Technical data

Suitable piston Ø	32 mm	40 mm	50 mm	63 mm	80 mm	100 mm
Weight 0 mm stroke	1.3 kg	2.3 kg	3.7 kg	4.7 kg	8.8 kg	11.1 kg
+10 mm stroke	0.009 kg	0.016 kg	0.025 kg	0.025 kg	0.039 kg	0.039 kg

Technical information

Material	
Bearing housings	Aluminum, colorless anodized
Bearing type	Steel
Carrying plate	Aluminum, colorless anodized
Flexible coupling in carrying plate	Stainless steel
Guide rods	Hardened heat-treated steel

Dimensions

Ø 32 ... 100 mm

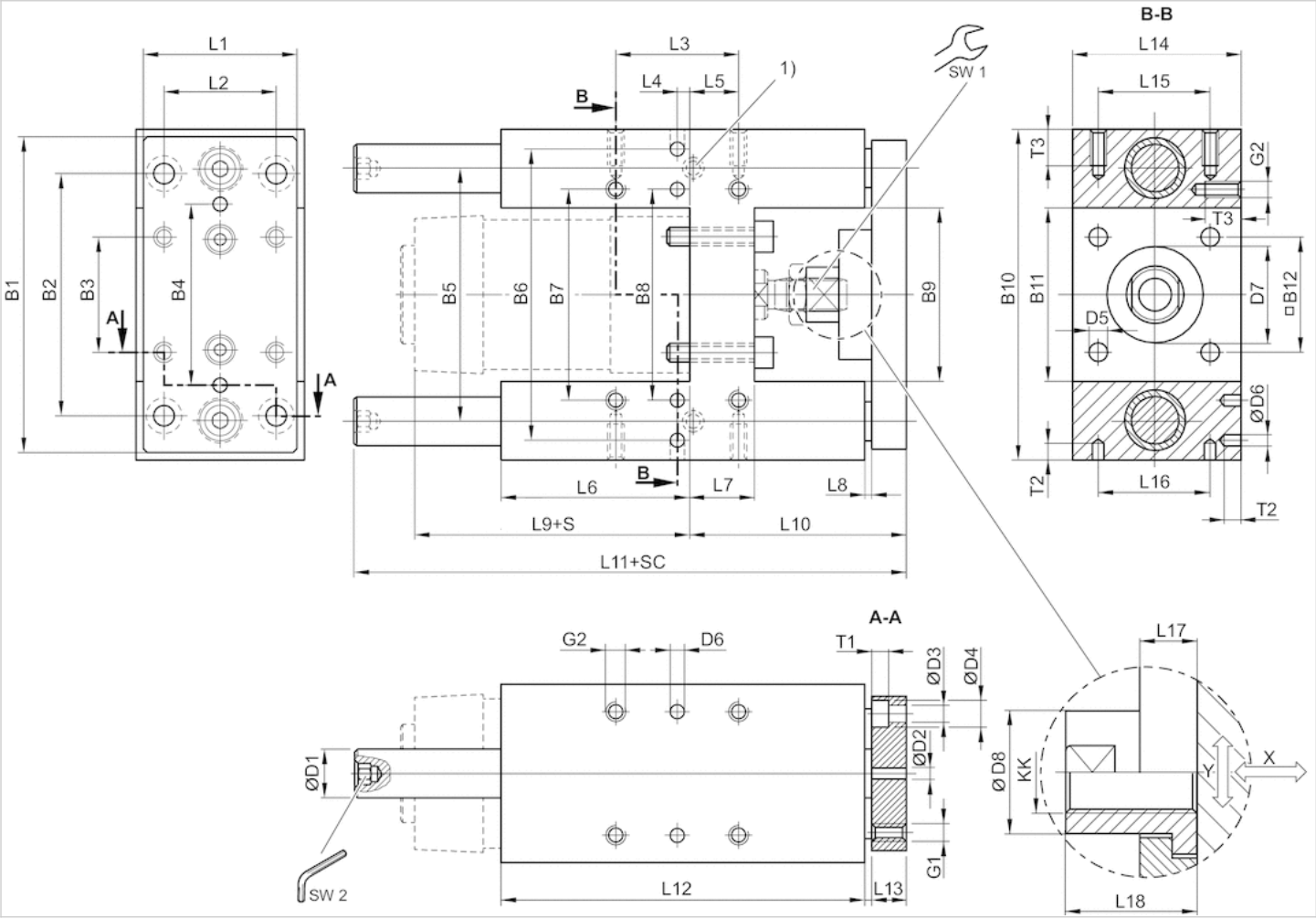

1) Lube nipple
S = stroke
SC = cylinder stroke
X = max. play (axial)
Y = min. play (radial)
Hexagon in guide rod

Dimensions

Piston Ø	B1	B2	B3	B4	B5	B6	B7	B8	B9	B10	B11	B12	D1	D2 H7	D3	D4	D5	D6 H7
32 mm	90	78	32.5	50	74	81	61	61	50.2	97	50.2	32.5	12	6	6.6	11	6.6	6
40 mm	110	84	38	54	87	99	69	69	58.2	115	58.2	38	16	6	6.6	11	6.6	6
50 mm	130	100	46.5	72	104	119	85	85	70.2	137	70.2	46.5	20	6	9	15	9	6
63 mm	145	105	56.5	82	119	132	100	100	85.2	152	85.2	56.5	20	6	9	15	9	6
80 mm	180	130	72	106	148	166	130	130	105.4	189	105.4	72	25	6	11	18	11	6
100 mm	200	150	89	131	172	190	150	150	130.4	213	130.4	89	25	6	11	18	11	6

Piston Ø	D7 M8	D8	G1	G2	KK	L1	L2	L3	L4	L5	L6	L7	L8	L9	L10	L11	L12
32 mm	30	14.5	M6	M6	M10x1,25	45	32.5	32.5	12	4.25	76	17	3	94	64	177.5	125
40 mm	35	18	M6	M6	M12x1,25	54	38	38	8	11	81	21	3	105	74	192.5	140

Piston Ø	D7 M8	D8	G1	G2	KK	L1	L2	L3	L4	L5	L6	L7	L8	L9	L10	L11	L12
50 mm	40	24	M8	M8	M16x1,5	63	46.5	46.5	4.5	18.75	79	26	3	106	89	237	150
63 mm	45	24	M8	M8	M16x1,5	80	56.5	56.5	13	15.25	111	26	3	121	89	237	182
80 mm	45	30	M10	M10	M20x1,5	100	72	72	15	21	128	34	3	128	110	280	215
100 mm	55	30	M10	M10	M20x1,5	120	89	89	20	24.5	128	39	3	138	115	280	220

Piston Ø	L13	L14	L15	L16	L17	L18	T1	T2	T3	SW1	SW2
32 mm	12	50	32.5	32.5	6	17	6.5	10	15	13	5
40 mm	12	58	38	38	14	22	6.5	10	15	15	6
50 mm	15	70	46.5	46.5	14	26	9	10	16	22	6
63 mm	15	85	56.5	56.5	14	26	9	10	16	22	6
80 mm	20	105	72	72	14	32	11	10	20	27	8
100 mm	20	130	89	89	14	32	11	10	20	27	8

Diagrams

Useful load

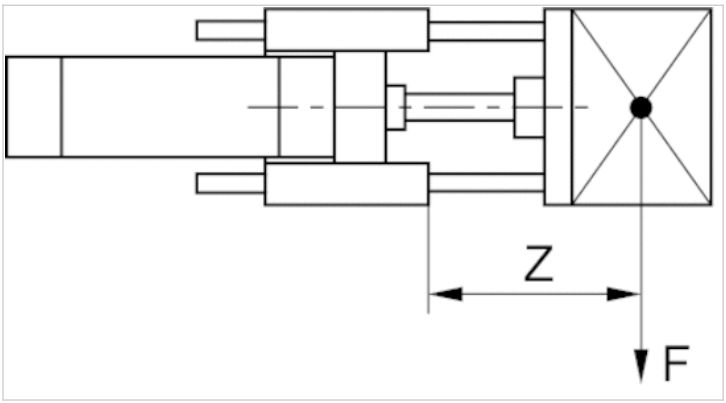

F = Useful load, Z = Projection

Useful load

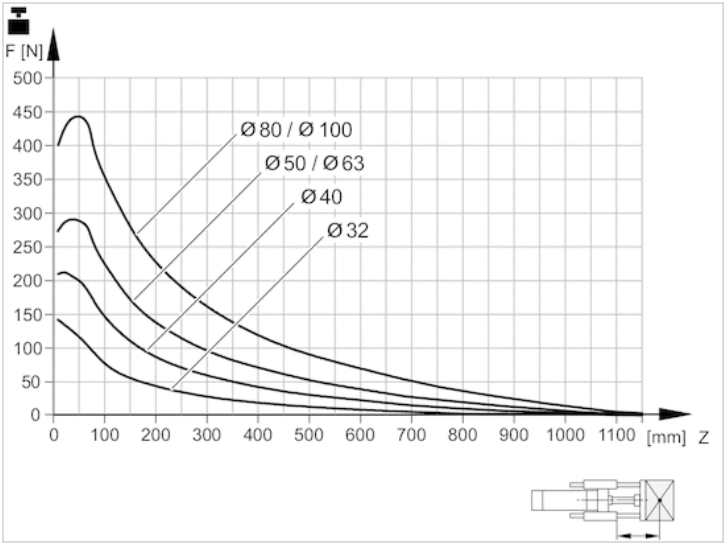

Service life 2x10⁶ m
F = Useful load, Z = Projection

Useful load

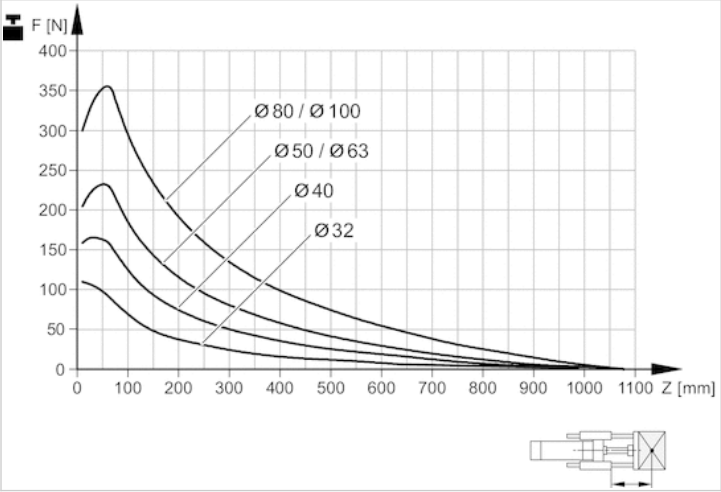

Service life 5x10⁶ m
F = Useful load, Z = Projection

Reduction of useful load for short-stroke

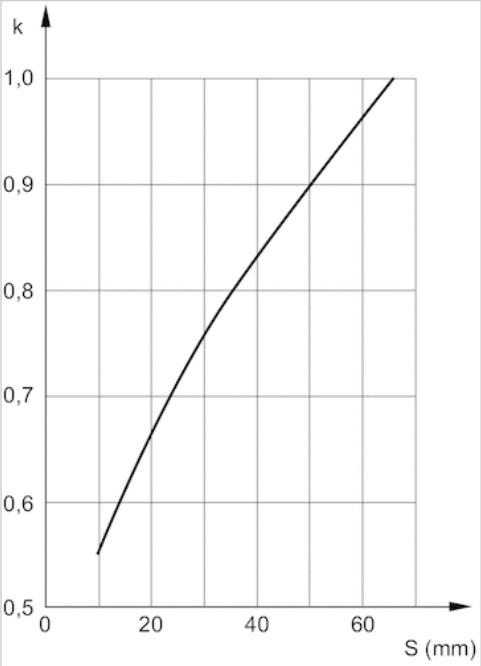

S = stroke
k=correction factor: normal=1, shock loaded=2
With a short stroke, the useful load figures determined from the diagram must be multiplied by the correction factor k.
These short-stroke adjustments are already included in the load diagram for a displacement of up to 60 mm.

Bending due to own load

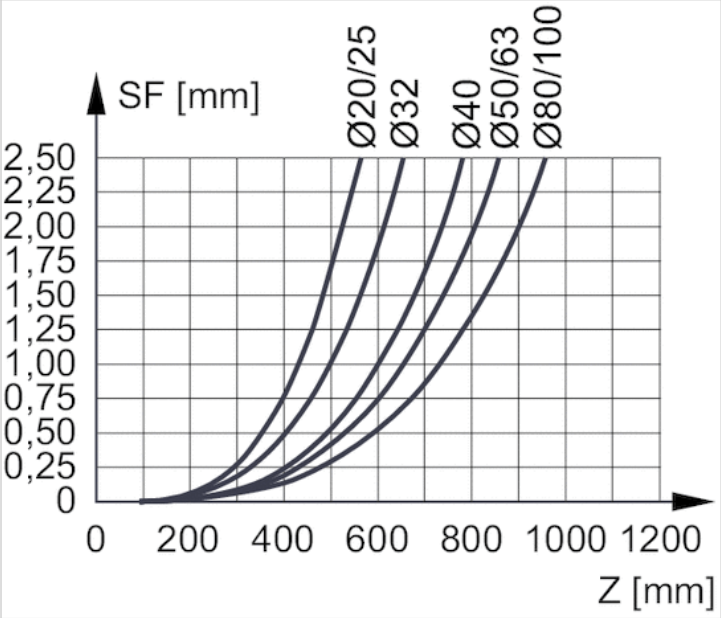

F = useful load (at the load center), SF = bending, Z = projection

Bending due to 10 N load

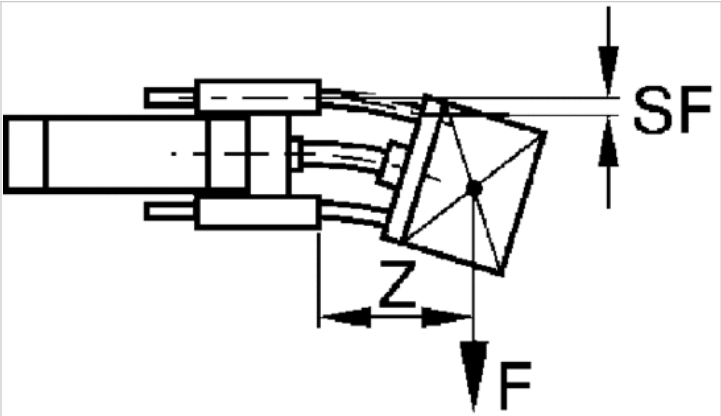

F = useful load (at the load center), SF = bending, Z = projection

Bending due to 10 N load

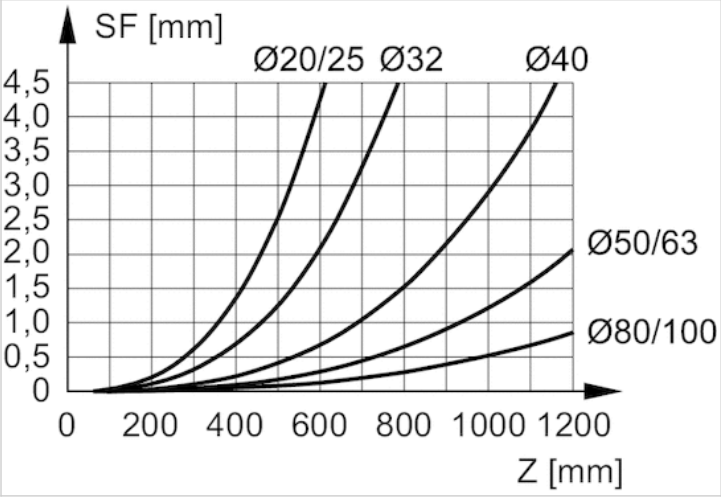

F = useful load (at the load center), SF = bending, Z = projection

Compensating coupling GU3 form B, series CG1



Technical data

Part No.	Suitable piston rod thread
R413000283	M8
R413000284	M10x1,25
R413000285	M20x1,5

Scope of delivery: flexible coupling incl. mounting screws

Technical information

Material	
	Stainless steel
	Steel

Dimensions

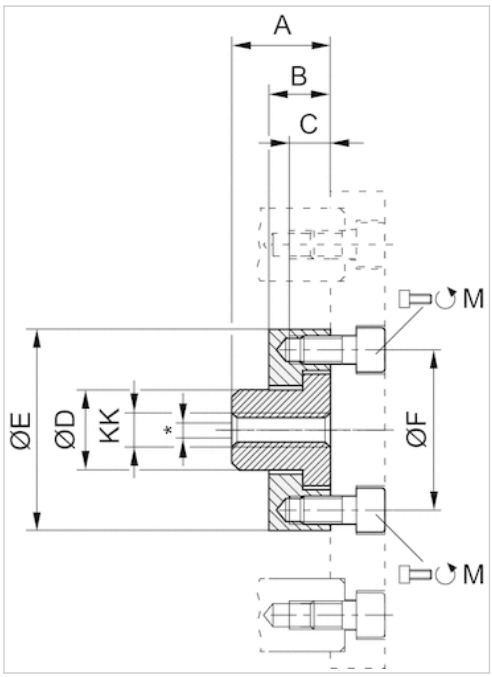

* Radial joint from 1,5 ... 1,8 mm

Dimensions

Part No.	KK	Ø	M	A	B	C	D	ØE	ØF
R413000283	M8	20	2x M5x12	22	6	6	14.5	SW 30	26
R413000284	M10x1,25	25/32	2x M5x12	17	6	6	14.5	SW 30	26
R413000285	M20x1,5	80/100	4x M6x20	32	14	9.5	30	60	51

Compensating coupling GU3 form C, series CG1



Technical data

Part No.	Suitable piston rod thread
R413000276	M6
R413000280	M12x1,25
R413000281	M16x1,5

Scope of delivery: flexible coupling incl. mounting screws

Technical information

Material	
	Stainless steel
	Steel

Dimensions

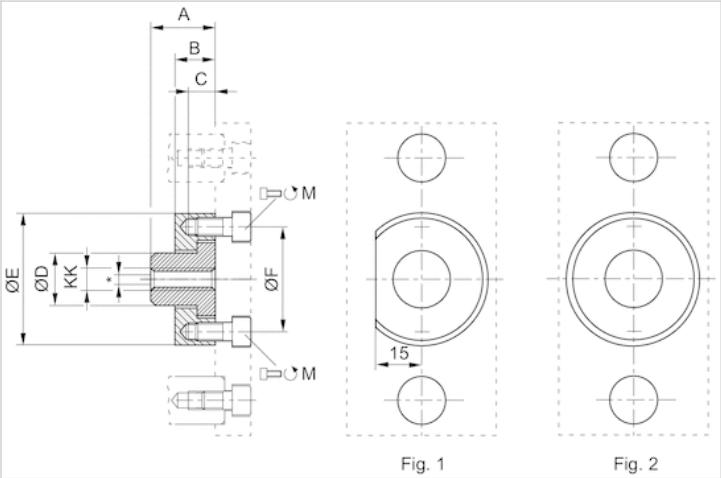

* Radial joint from 1,0 ... 2,5 mm

Dimensions

Part No.	KK	Ø	M	A	B	C	D	ØE	ØF
R413000276	M6	12/16	2x M4x10	18	7	7	10	22	15
R413000280	M12x1,25	40	2x M6x12	22	14	8	18	45	36
R413000281	M16x1,5	50/63	4x M6x14	26	14	8	24	54	45

Holding unit, Series HU1

- Ø 32-100 mm
- hold: spring force, release: compressed air



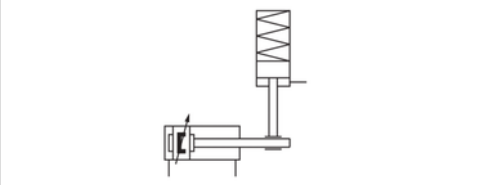

Function	Hold with clamping jaws
Release pressure	4 ... 8 bar
Ambient temperature min./max.	-10 ... 60 °C
Medium temperature min./max.	-10 ... 60 °C
Medium	Compressed air
Max. particle size	5 µm
Oil content of compressed air	0 ... 5 mg/m³
Weight	See table below

Technical data

Part No.	Piston Ø	suitable piston rod Ø	Piston rod extension	Compressed air connection	Static holding force	Weight
0821401165	32 mm	12 mm	42 mm	M5	650 N	0.2 kg
0821401166	40 mm	16 mm	45 mm	G 1/8	1100 N	0.27 kg
0821401167	50 mm	20 mm	57 mm	G 1/8	1600 N	0.57 kg
0821401168	63 mm	20 mm	57 mm	G 1/8	2500 N	0.8 kg
0821401169	80 mm	25 mm	77 mm	G 1/8	4000 N	1.85 kg
0821401170	100 mm	25 mm	77 mm	G 1/8	6300 N	2.9 kg

Holding force at 0 bar

Technical information

Warning: The holding unit may not be used for the following applications:
1) for dynamic holding
2) in or as safety equipment
Holding unit may only be unlocked when turned off.
Make sure that the load direction does not change during a holding interval. A change in the direction of force, as well as external forces such as impacts, strong vibrations, or torsional forces, will briefly release the piston rod and may destroy the HU1 holding unit.
When clamped, there must be no residual pressure on the holding unit (0 bar).
Note:
The minimum control pressure is >= the working pressure of the cylinder!

Technical information

Material	
Housing	Aluminum, black anodized

Dimensions

Dimensions

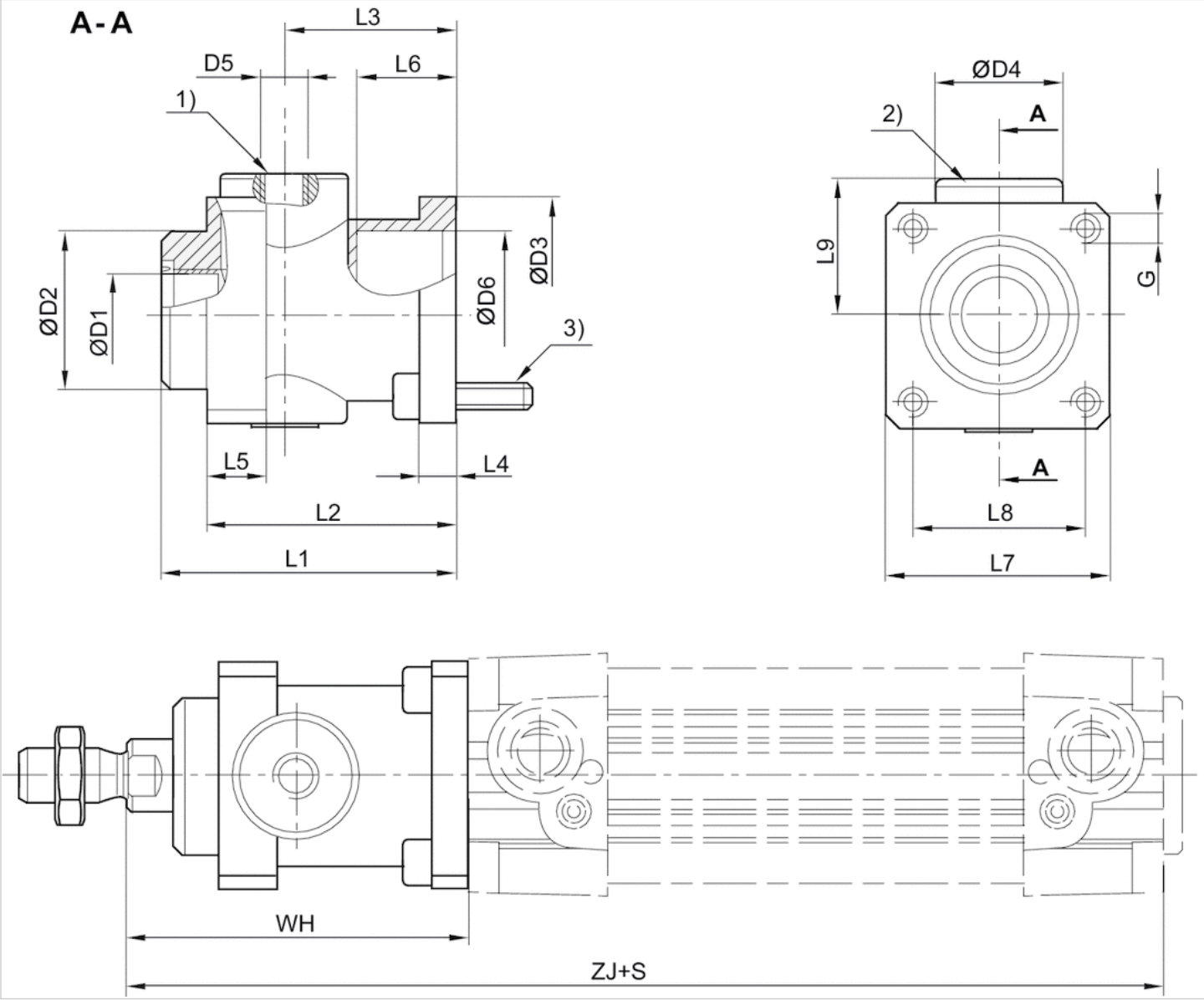

1) air connection
2) Holding cartridge
3) mounting screws 4x
S = stroke

Dimensions

Part No.	Piston Ø	Ø D1	Ø D2	Ø D3	Ø D4	D5	L1	L2	L3	L4	L5	L6	L7	L8	L9	G
0821401165	32 mm	12	30	35	25	M5	58	48	34	8	13	20.5	45	32.5	25.5	M6
0821401166	40 mm	16	35	40	28	G 1/8	65	55	38	8	13	22.5	50	38	30	M6
0821401167	50 mm	20	40	50	35	G 1/8	82	70	48	15	16	29.5	60	46.5	36	M8
0821401168	63 mm	20	45	60	38	G 1/8	82	70	49.5	15	16	29.5	70	56.5	40	M8
0821401169	80 mm	25	45	80	48	G 1/8	110	90	61	18	20	35	90	72	50	M10
0821401170	100 mm	25	55	100	58	G 1/8	115	100	69	18	20	–	105	89	58	M10

WH	ZJ
68	162
75	180
94	200
94	215
123	251
128	266

Locking unit, Series LU1

- Ø 32-100 mm
- Hold: adjustable spring force, Release: compressed air





Function	Clamp with eccentric tappet
Release pressure	2 ... 8 bar
Ambient temperature min./max.	-20 ... 80 °C
Medium temperature min./max.	-20 ... 80 °C
Medium	Compressed air
Max. particle size	5 µm
Oil content of compressed air	0 ... 5 mg/m³
Weight	See table below

Technical data

Part No.	Piston Ø	suitable piston rod Ø	Piston rod extension	Compressed air connection	Static holding force
0821401130	32 mm	12 mm	79 mm	G 1/8	840 N
0821401131	40 mm	16 mm	81 mm	G 1/8	1100 N
0821401132	50 63 mm	20 mm	100 mm	G 1/8	2700 N
0821401133	80 100 mm	25 mm	140 mm	G 1/8	5800 N

Part No.	Weight
0821401130	1.75 kg
0821401131	1.75 kg
0821401132	3 kg
0821401133	8.8 kg

Holding force at 0 bar, Mounting elements LU3, LU4, LU5 are required for assembly and must be ordered separately as accessories.

Technical information

Warning:
The Locking unit may not be used for the following applications:
- for dynamic holding
- in or as safety equipment

Locking unit may only be unlocked when turned off.
Note:
The minimum release pressure is >= the working pressure of the cylinder!
The holding force is dependent on the set spring force

Technical information

Material	
Housing	Aluminum, anodized
Cap	Die-cast aluminum

Dimensions

Dimensions

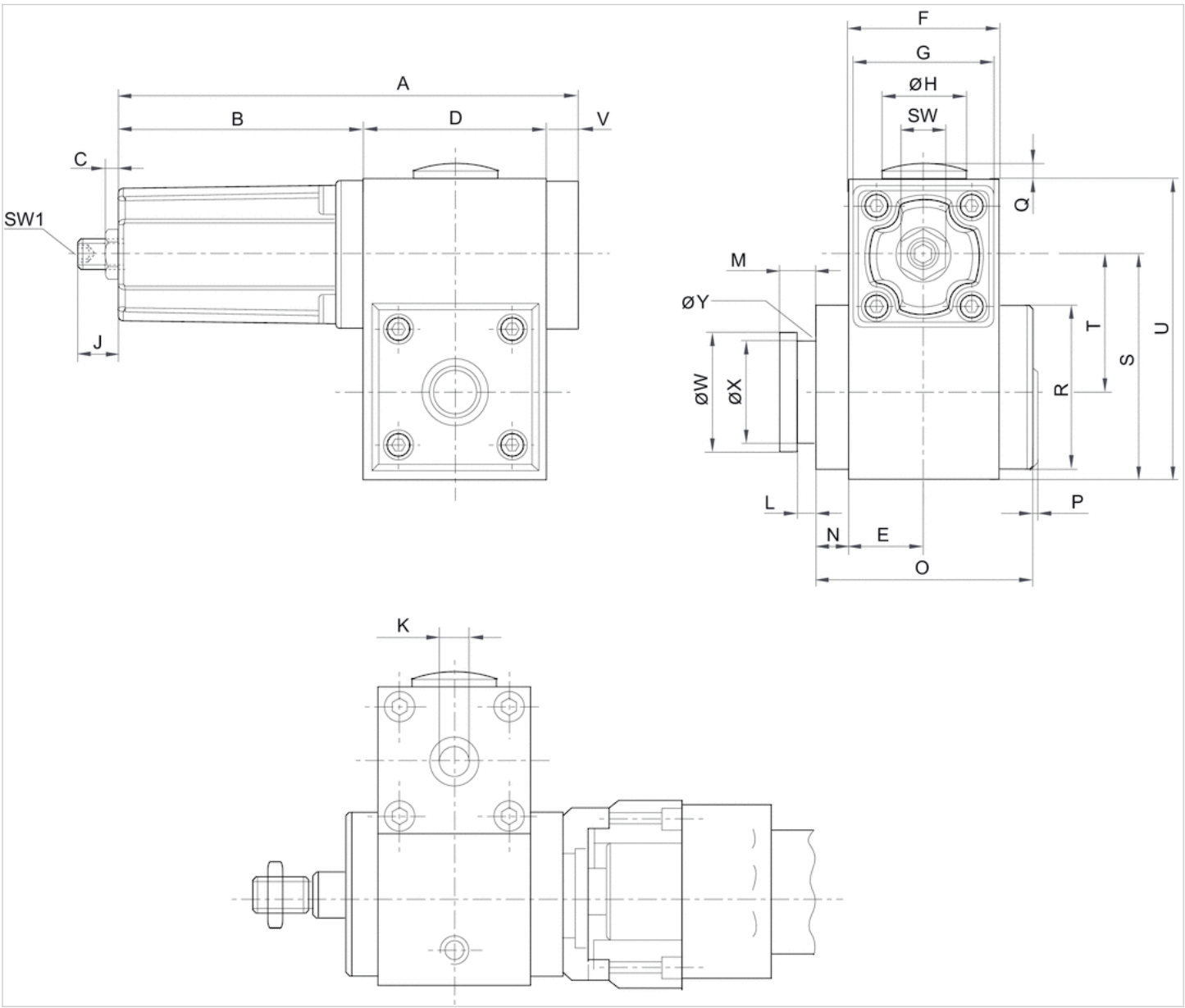

Dimensions

Part No.	A	B	C	D	E	F	G	ØH	J	K	L	M	N	O	P	Q	R	S	SW	SW1	T	U
0821401130	135	69	10	56	23	46	45	30	19	G 1/8	4.1	8	9	65	3	2.5	50	69	15	5	41.9	92
0821401131	135	69	10	56	23	46	45	30	18	G 1/8	5.1	10	9	65	3	2.5	50	69	15	5	40.5	92
0821401132	169	90	10	69	30	60	55	30	17	G 1/8	5.1	10	9	84	3	2.5	60	80	15	5	48	111
0821401133	208	98	16.7	100	40	80	65	37.5	15	G 1/8	8.1	16	13	118	3	2	90	119	24	8	72	155

V	ØW	ØX	ØY
10	29.9	24	3
10	39.9	30	3
10	39.9	30	3
10	54.9	40	5

Locking unit, Series LU1

- Ø 32-100 mm
- hold: spring force, release: compressed air



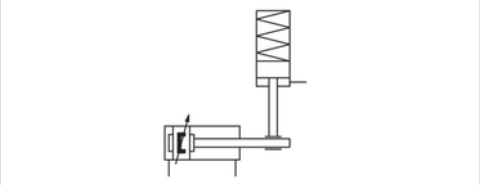

Function	Clamp with eccentric tappet
Release pressure	See table below
Ambient temperature min./max.	-20 ... 80 °C
Medium temperature min./max.	-20 ... 80 °C
Medium	Compressed air
Max. particle size	5 µm
Oil content of compressed air	0 ... 5 mg/m³
Weight	See table below

Technical data

Part No.	Piston Ø	suitable piston rod Ø	Piston rod extension	Compressed air connection	Release pressure
R412003730	32 mm	12 mm	79 mm	G 1/8	4.5 ... 8 bar
0821401134	32 mm	12 mm	79 mm	G 1/8	5.5 ... 8 bar
R412003731	40 mm	16 mm	81 mm	G 1/8	4.5 ... 8 bar
0821401135	40 mm	16 mm	81 mm	G 1/8	5.5 ... 8 bar
R412003732	50 63 mm	20 mm	100 mm	G 1/8	4.5 ... 8 bar
0821401136	50 63 mm	20 mm	100 mm	G 1/8	5.5 ... 8 bar
R412003733	80 100 mm	25 mm	140 mm	G 1/8	4.5 ... 8 bar
0821401137	80 100 mm	25 mm	140 mm	G 1/8	5.5 ... 8 bar

Part No.	Static holding force	Weight
R412003730	740 N	1.52 kg
0821401134	840 N	1.52 kg
R412003731	1000 N	1.5 kg
0821401135	1100 N	1.5 kg
R412003732	2300 N	2.56 kg
0821401136	2700 N	2.56 kg
R412003733	4000 N	7.7 kg
0821401137	5800 N	7.7 kg

Holding force at 0 bar, Mounting elements LU3, LU4, LU5 are required for assembly and must be ordered separately as accessories.

Technical information

Warning:
The Locking unit may not be used for the following applications:
- for dynamic holding
- in or as safety equipment
Locking unit may only be unlocked when turned off.

Technical information

Material	
Housing	Aluminum, anodized
Cap	Die-cast aluminum

Dimensions

Dimensions

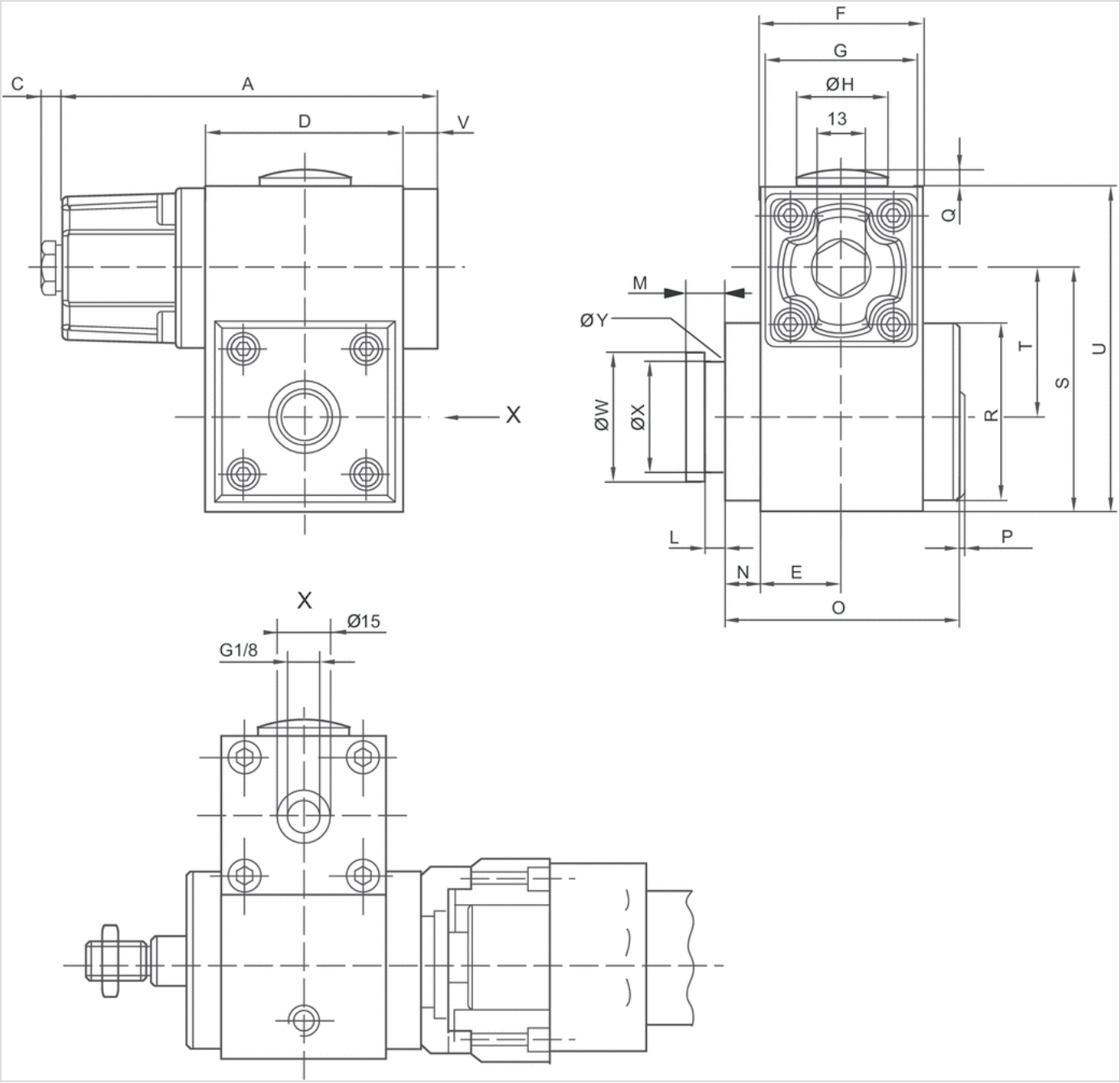

Dimensions

Part No.	A	C	D	E	F	G	Ø H	L	M	N	O	P	Q	R	S	T	U	V	Ø W	Ø X	Ø Y
R412003730	106	6	56	23	46	45	30	4.1	8	9	65	3	2.5	50	68.5	41.9	91.5	10	29.9	24	3
0821401134	106	6	56	23	46	45	30	4.1	8	9	65	3	2.5	50	68.5	41.9	91.5	10	29.9	24	3
R412003731	106	6	56	23	46	45	30	5.1	10	9	65	3	2.5	50	68.5	40.5	91.5	10	39.9	30	3
0821401135	106	6	56	23	46	45	30	5.1	10	9	65	3	2.5	50	68.5	40.5	91.5	10	39.9	30	3
R412003732	139.5	6	69	30	60	55	30	5.1	10	9	83.5	3	2.5	60	79.5	48	110	10	39.9	30	3
0821401136	139.5	6	69	30	60	55	30	5.1	10	9	83.5	3	2.5	60	79.5	48	110	10	39.9	30	3
R412003733	176.5	6	100	40	80	65	37.5	8.1	16	13	118	3	2	90	119	72	155	10	54.9	40	5
0821401137	176.5	6	100	40	80	65	37.5	8.1	16	13	118	3	2	90	119	72	155	10	54.9	40	5

Locking unit, Series LU6

- Ø 32-125 mm
- Holding and braking: non-adjustable spring, Release: compressed air



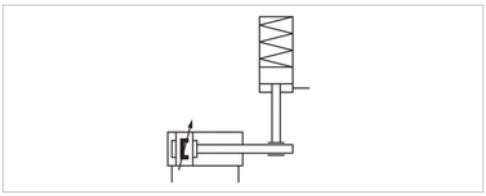

Version	Clamping jaw lock
Function	Static holding Dynamic braking
Release pressure	4 ... 10 bar
Ambient temperature min./max.	-25 ... 80 °C
Medium temperature min./max.	-25 ... 80 °C
Medium	Compressed air
Max. particle size	5 µm
Oil content of compressed air	0 mg/m³
Weight	See table below

Technical data

Part No.	Piston Ø	suitable piston rod Ø	Piston rod extension	Compressed air connection	Required flow rate
					Qn
5230996402	32 mm	12 mm	125 mm	G 1/8	50 l/min
5231996402	40 mm	16 mm	125 mm	G 1/8	70 l/min
5232996402	50 mm	20 mm	145 mm	G 1/8	140 l/min
5233996402	63 mm	20 mm	165 mm	G 1/8	240 l/min
5234996402	80 mm	25 mm	185 mm	G 1/8	450 l/min
5235996402	100 mm	25 mm	220 mm	G 1/8	700 l/min
5236996402	125 mm	32 mm	220 mm	G 1/4	1200 l/min

Part No.	Max. torsional moment of piston rod	B10d value static	B10d value dynamic
5230996402	0.5 Nm	5.000.000	2.000.000
5231996402	1 Nm	5.000.000	2.000.000
5232996402	2 Nm	5.000.000	2.000.000
5233996402	2.5 Nm	5.000.000	2.000.000
5234996402	5 Nm	5.000.000	2.000.000
5235996402	9 Nm	5.000.000	2.000.000
5236996402	15 Nm	5.000.000	2.000.000

Part No.	Buckling protection of the piston rod 1)		Weight	
	Max. cylinder stroke for Euler case 1	Max. cylinder stroke for Euler case 2		
5230996402	750 mm	400 mm	0.8 kg	1)
5231996402	1100 mm	550 mm	1 kg	1)
5232996402	1350 mm	700 mm	1.8 kg	1)
5233996402	950 mm	500 mm	2.8 kg	1)

Part No.	Buckling protection of the piston rod 1)		Weight	
	Max. cylinder stroke for Euler case 1	Max. cylinder stroke for Euler case 2		
5234996402	1350 mm	700 mm	5.5 kg	1)
5235996402	950 mm	500 mm	9.5 kg	1)
5236996402	1500 mm	800 mm	13.8 kg	2)

1) Only applies in dynamic cases, and only retracting DGUV certified

2) Only applies in dynamic cases, and only retracting

Technical data

Piston Ø	32 mm	40 mm	50 mm
Max. holding/braking force FLU6	760 N	1200 N	1900 N
Max. moving mass, external mmax	77 kg	122 kg	194 kg
Max. piston speed vmax	1 m/s	1 m/s	1 m/s
Max. total braking energy (MJ) Etotal	3.2 MJ	6 MJ	10 MJ
Max. braking energy per hour PLU6	720 J	1350 J	2250 J
Max. braking energy per braking cycle ELU6	4.8 J	9 J	15 J
Braking energy per braking cycle related to B10d EB10d	1.6 J	3 J	5 J
Brake response time (4 bar) tbrake	0.08 s	0.08 s	0.08 s
Brake response time (6.3 bar) tbrake	0.1 s	0.1 s	0.1 s
Brake response time (10 bar) tbrake	0.12 s	0.12 s	0.12 s

Piston Ø	63 mm	80 mm	100 mm
Max. holding/braking force FLU6	3000 N	5000 N	8000 N
Max. moving mass, external mmax	306 kg	510 kg	815 kg
Max. piston speed vmax	1 m/s	1 m/s	1 m/s
Max. total braking energy (MJ) Etotal	18 MJ	36 MJ	58 MJ
Max. braking energy per hour PLU6	4050 J	8100 J	13200 J
Max. braking energy per braking cycle ELU6	27 J	54 J	88 J
Braking energy per braking cycle related to B10d EB10d	9 J	18 J	29 J
Brake response time (4 bar) tbrake	0.08 s	0.08 s	0.09 s
Brake response time (6.3 bar) tbrake	0.1 s	0.1 s	0.11 s
Brake response time (10 bar) tbrake	0.12 s	0.12 s	0.13 s

Piston Ø	125 mm
Max. holding/braking force FLU6	12000 N
Max. moving mass, external mmax	1223 kg
Max. piston speed vmax	1 m/s
Max. total braking energy (MJ) Etotal	93 MJ
Max. braking energy per hour PLU6	21000 J
Max. braking energy per braking cycle ELU6	140 J
Braking energy per braking cycle related to B10d EB10d	47 J
Brake response time (4 bar) tbrake	0.09 s
Brake response time (6.3 bar) tbrake	0.11 s
Brake response time (10 bar) tbrake	0.13 s

The values for the max. braking energy per braking cycle are equivalent to the cushioning energy for cylinder series PRA and TRB.

Technical information

The maximum ambient and medium temperature is + 70 °C for the dynamic braking function.
Note:
Before pressurizing the locking unit, make sure that there is a balance of forces at the piston on the drive cylinder. Please see the operating instructions for further safety-relevant information. The locking unit can be used in controls with a max. performance level e in accordance with DIN EN ISO 13849-1 ("basic and well-tried safety principles"). For applications in category 2 to 4 controls, additional control measures according to DIN EN ISO 13849-1 are required.
The locking unit can be used as an individual component or pre-mounted on a cylinder..
Scope of delivery: LU6, each with 4 flange nuts, washers, and tie rods
For technical reasons, formulas and sample calculations have been moved to the MediaCentre (link to operating instructions).

Technical information

Material	
Housing	Aluminum, anodized
Seal	Nitrile butadiene rubber
Scraper	Nitrile butadiene rubber

Dimensions

Dimensions

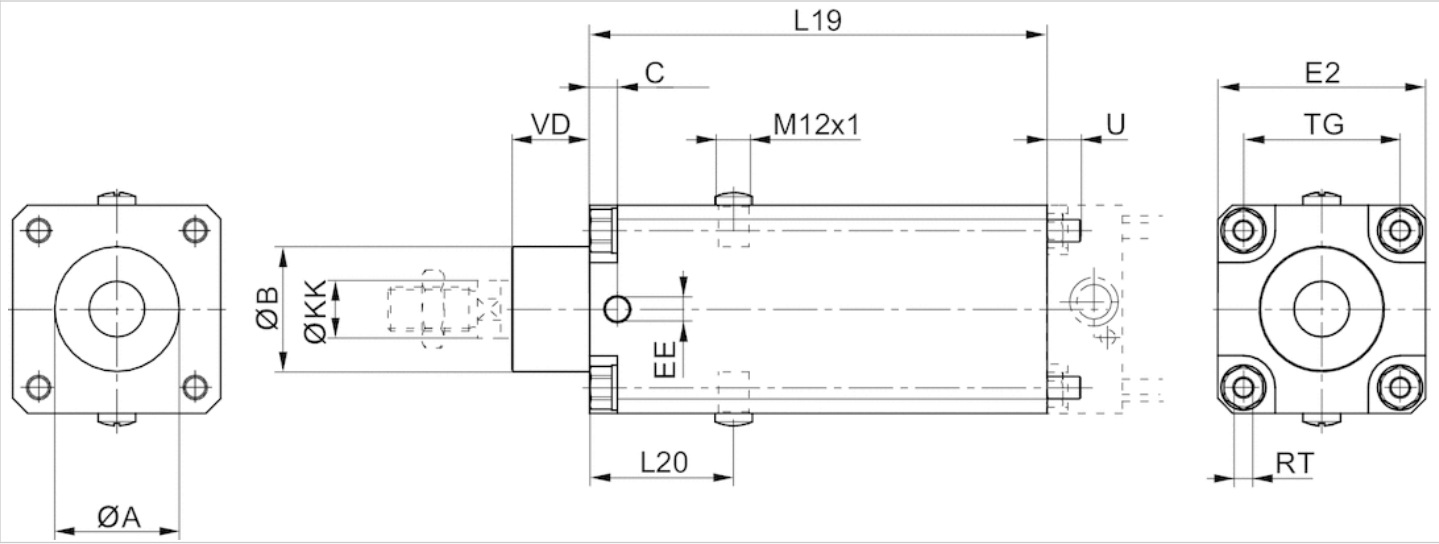

Dimensions

Piston Ø	ØA	ØB d11	C	EE	E2	L19	L20	ØKK e8-h9	TG	RT	U	VD
32 mm	30,5	30	9	G1/8	48	125	44	12	32,5	M6	10	19
40 mm	35,5	35	9	G1/8	53	125	44	16	38	M6	10	21
50 mm	40,5	40	9	G1/8	63	145	49	20	46,5	M8	11	28
63 mm	45,5	45	10	G1/8	75	165	52	20	56,5	M8	11	28
80 mm	45,5	45	11	G1/8	98	185	61.5	25	72	M10	16	34
100 mm	55,5	55	13	G1/8	118	220	68	25	89	M10	16	37
125 mm	60,5	60	13	G1/4	142	220	75	32	110	M12	16	45

Circuit diagram

Circuit example for non-safety relevant functions:, horizontal installation position

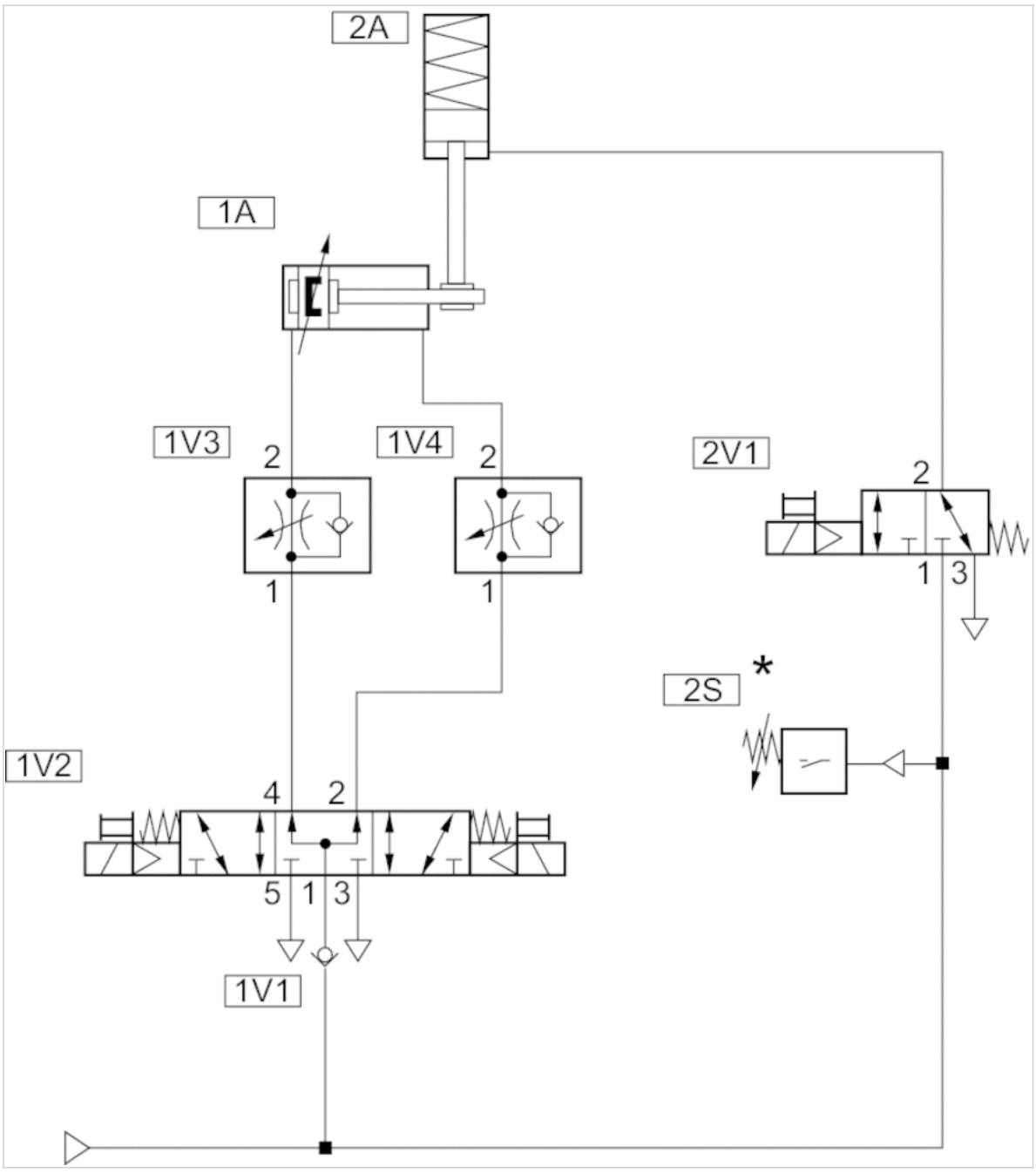

* From 4 bar : release of 2V1

Circuit example for non-safety relevant functions:, Vertical mounting orientation

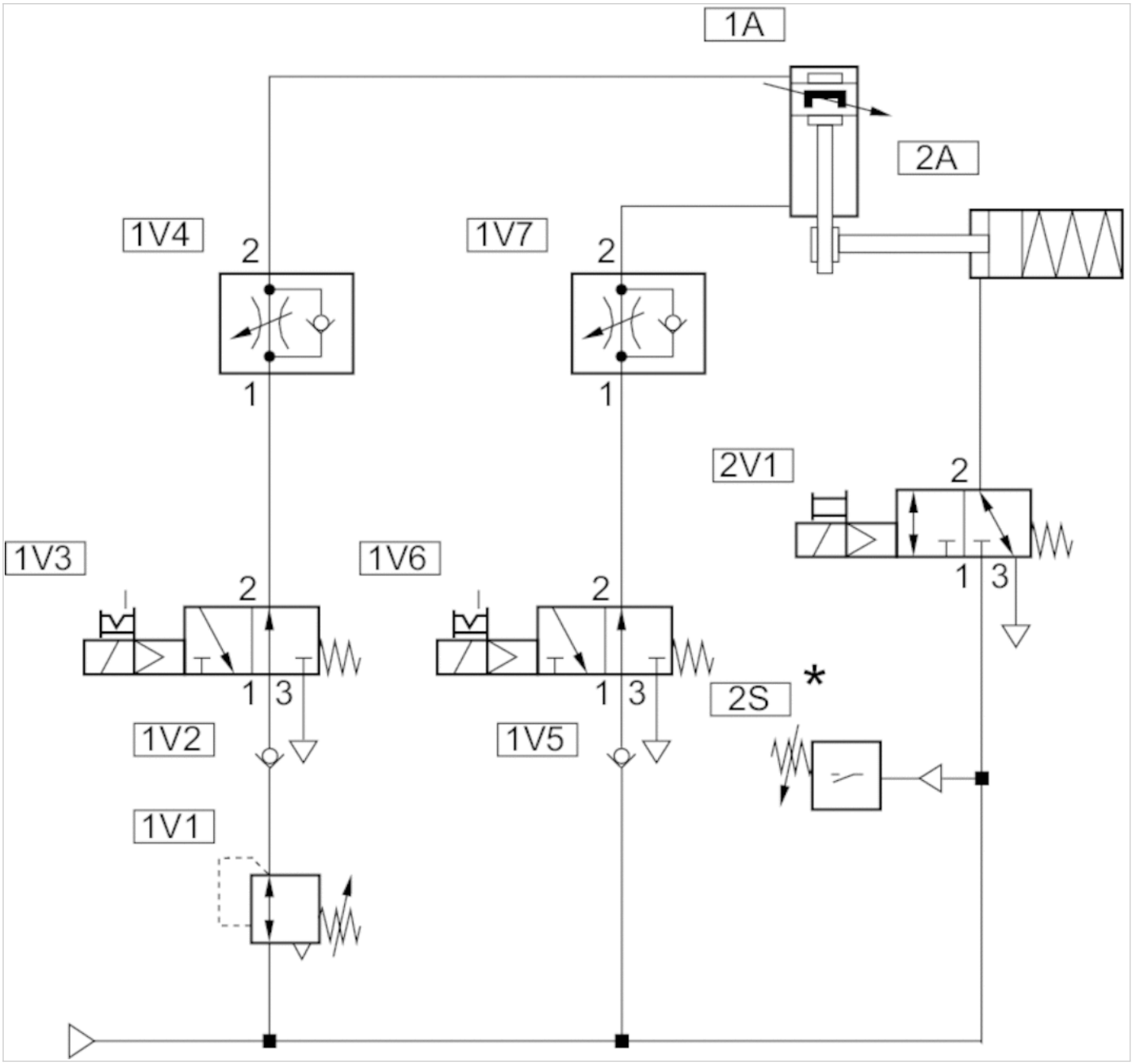

* From 4 bar : release of 2V1

Circuit example for safety-related stop functions:, horizontal installation position

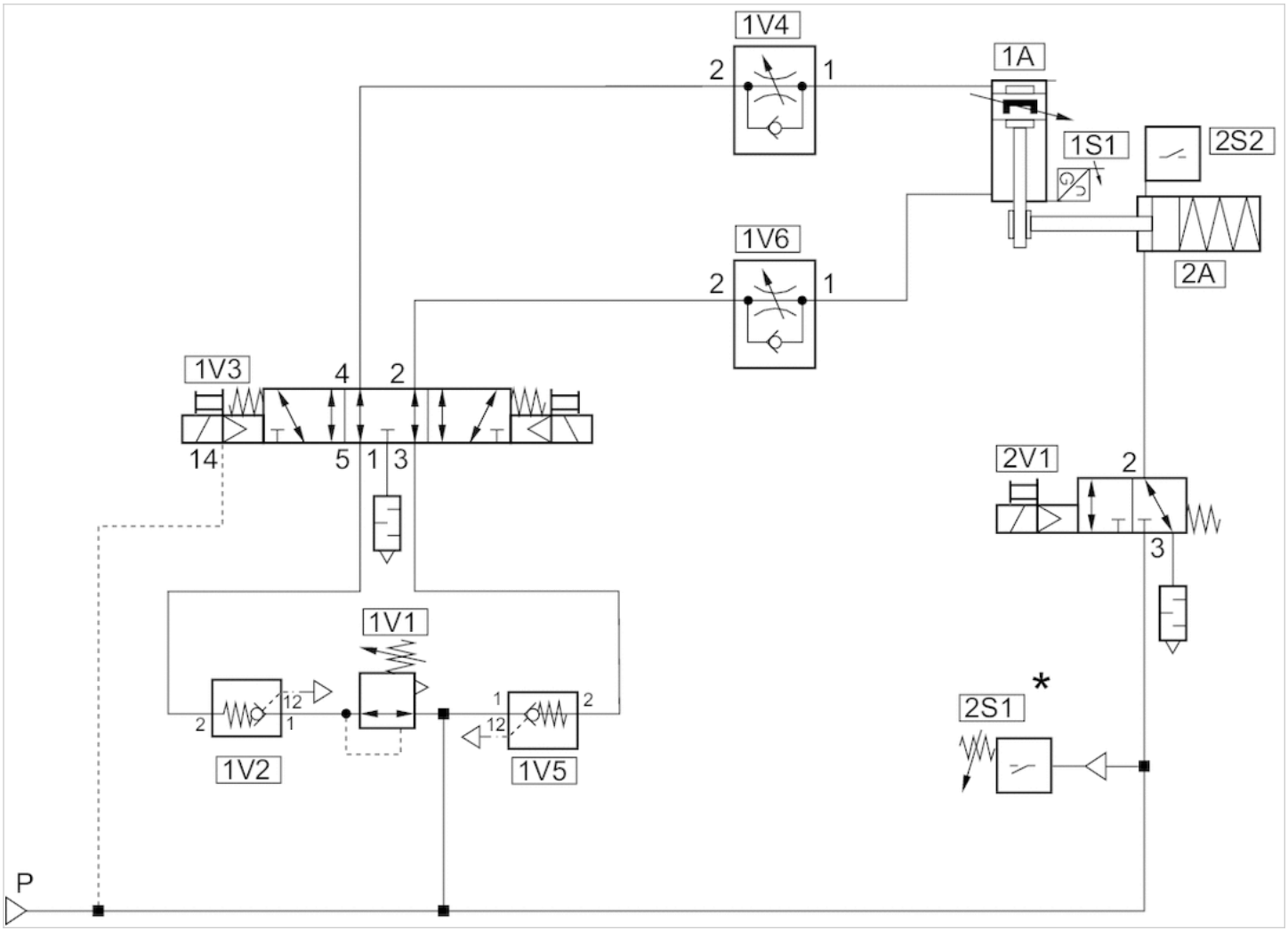

Channel 1: Safe stopping and closing
Channel 2: Safe brake control
* From 4 bar : release of 2V1

Circuit example for safety-related stop functions:, Vertical mounting orientation

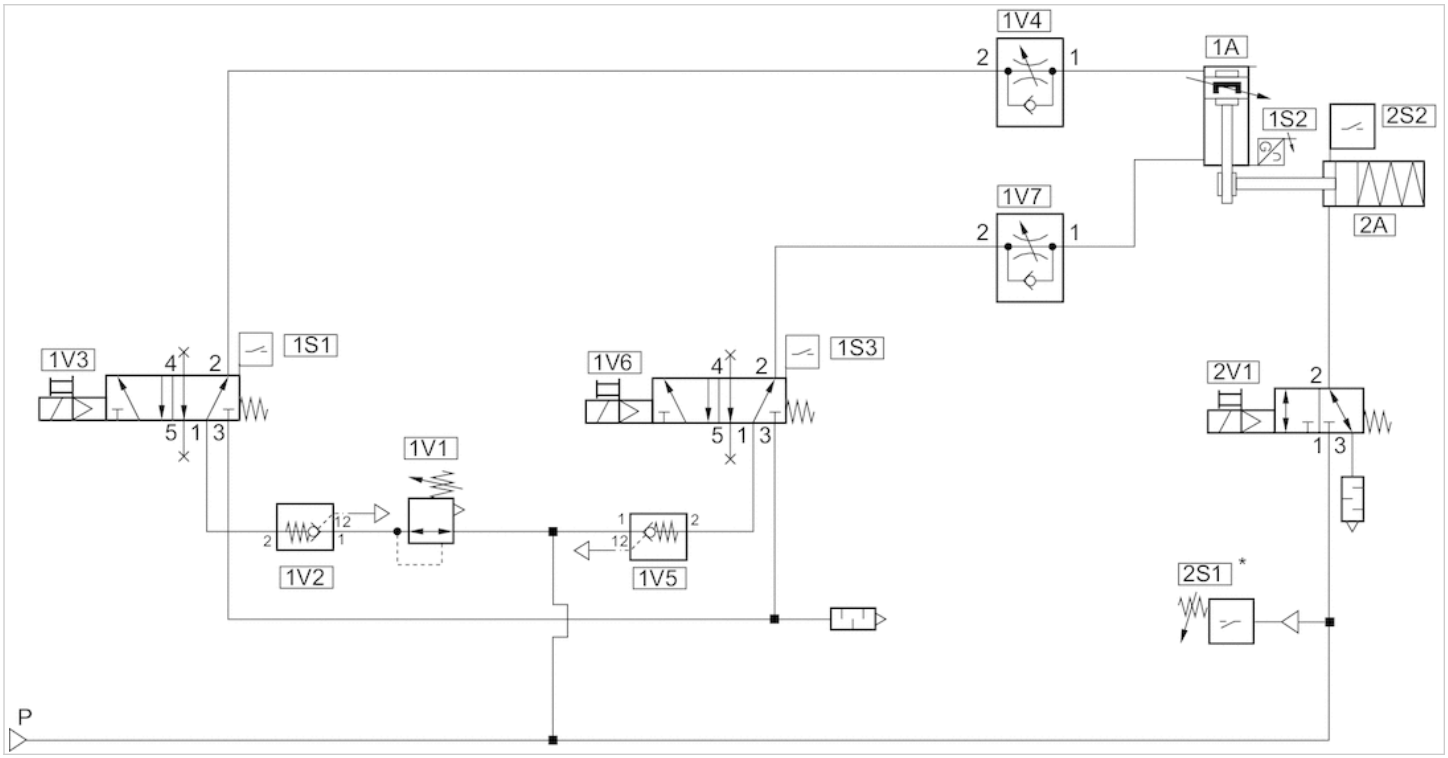

Channel 1: Safe stopping and closing
Channel 2: Safe brake control
* From 4 bar : release of 2V1

Foot mounting, Series LU4

- for cylinders with locking units
- Ø 32-100 mm



Ambient temperature min./max.	-20 ... 80 °C
Medium temperature min./max.	-20 ... 80 °C

Technical data

Part No.	Piston Ø
1827001520	32 mm
1827001521	40 mm
1827001522	50 mm
1827001526	63 mm
1827001524	80 mm
1827002152	100 mm

Technical information

Material	
Housing	Nodular graphite iron, galvanized

Dimensions

Dimensions

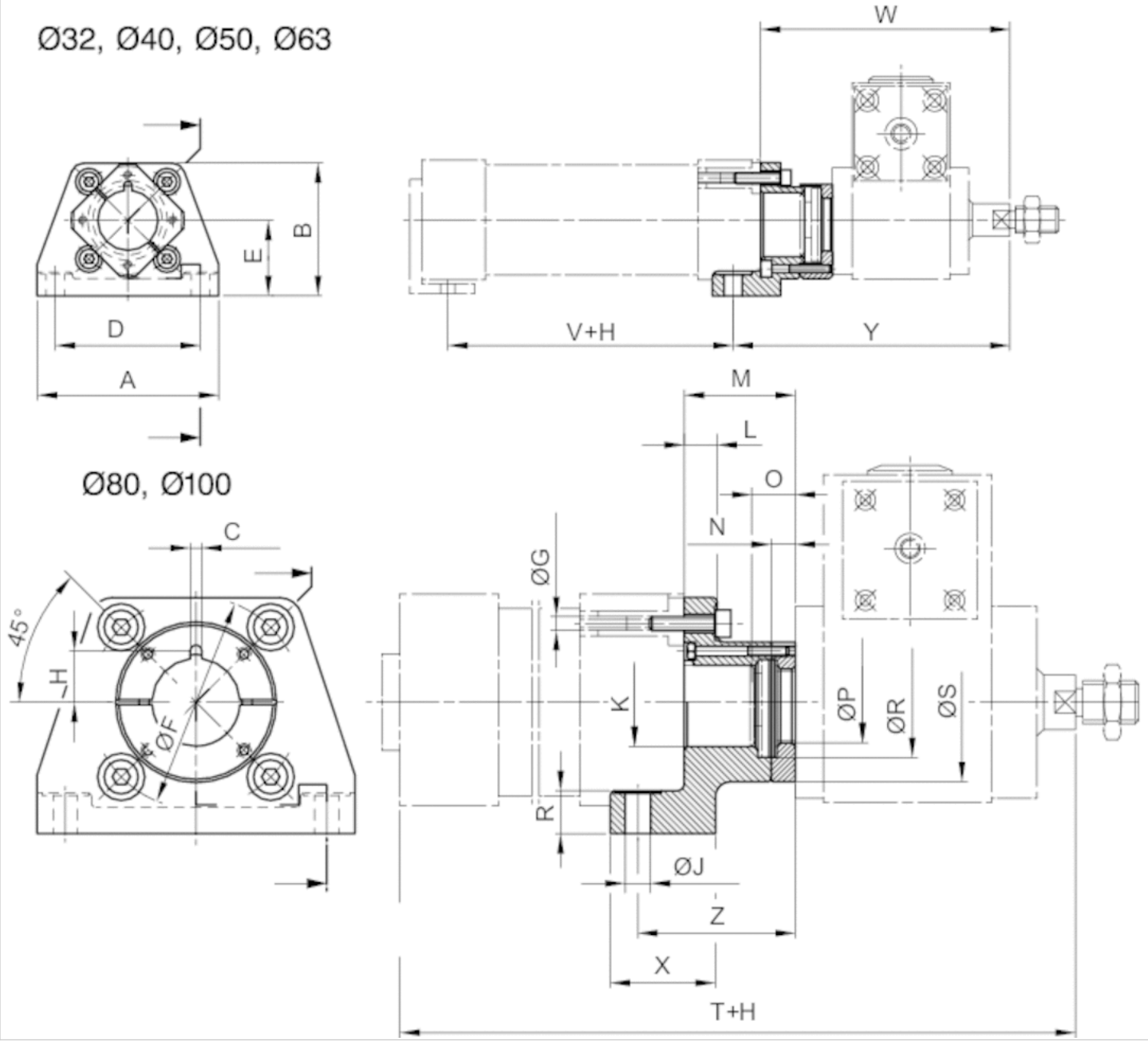

H = stroke
The locking unit can be rotated by 4x90°.

Dimensions

Part No.	A	B	C ±0,1	D ±0,1	E	Ø F	Ø G H13	I	J H8	K H10	L	M	N	O	Ø P	R
1827001520	79	57	3.6	65	32	46	6.6	13.2	6.6	30	7	27	3.9	–	24.2	9
1827001521	90	64	3.6	75	36	54	6.6	18.2	6.6	35	9.5	33	4.9	13	30.2	11
1827001522	110	80	3.6	90	45	66	8.4	18.2	9	40	11	38	4.9	–	30.2	15
1827001526	120	90	3.6	100	50	80	8.4	18.2	9	45	11	38	4.9	–	30.2	15
1827001524	153	113	6	128	63	102	10.5	24.5	11	45	15	52	7.9	18	40.2	19.5
1827002152	176	133	6	148	71	126	10.5	24.6	11	55	15	57	7.9	–	40.2	19.5

Ø R	Ø S	T	V	W	X	Y	Z
30	46.5	199	68	105	32	118	40
40	55.5	216	79	111	32	124	46
40	66	243	74	137	41	153	54
40	71	258	89	137	41	153	54
55	75	314	84	186	50	208	74
55	80	329	94	191	50	213	79

Flange mounting, Series LU5

- for cylinders with locking units
- Ø 32-100 mm



Ambient temperature min./max.	-20 ... 80 °C
Medium temperature min./max.	-20 ... 80 °C

Technical data

Part No.	Piston Ø
1827001512	32 mm
1827001513	40 mm
1827001514	50 mm
1827001503	63 mm
1827001516	80 mm
1827001517	100 mm

Technical information

Material	
Housing	Nodular graphite iron, galvanized

Dimensions

Dimensions

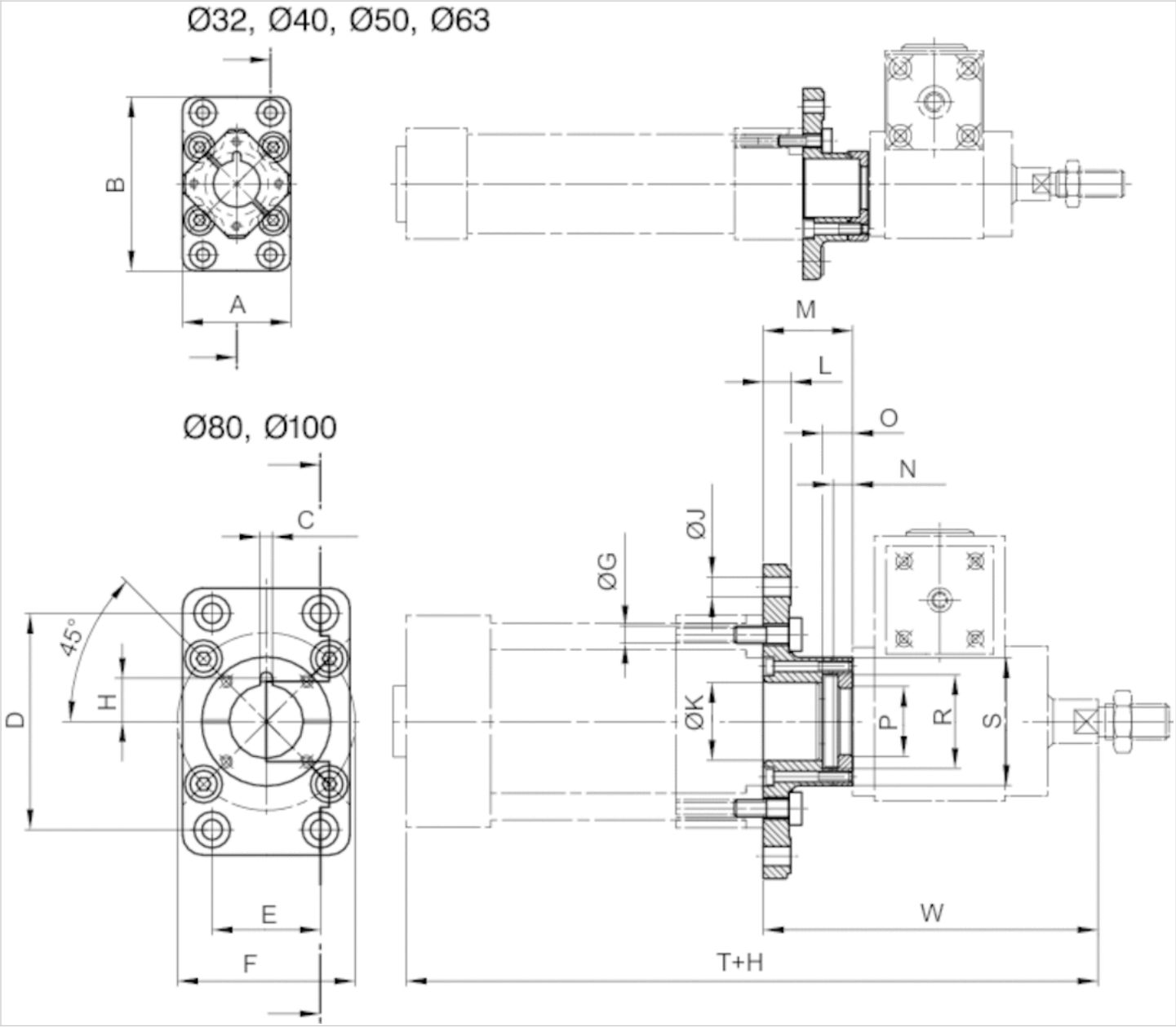

Dimensions

Part No.	A	B	C ±0,1	D ±0,1	E ±0,1	Ø F ±0,2	Ø G H13	H	Ø J H13	Ø K H10	L	M
1827001512	50	79	3.6	64	32	46	6.6	13.2	7	30	8	27
1827001513	56	91	3.6	72	36	54	6.6	18.2	9	35	10	33.3
1827001514	70	111	3.6	90	45	66	8.4	18.2	9	40	12	38.3
1827001503	80	120	3.6	100	50	80	8.4	18.2	9	45	12	38.3
1827001516	100	153	6	126	63	102	10.5	24.5	12	45	16	52
1827001517	120	178	6	150	75	126	10.5	24.6	14	55	16	57

N ±0,1	O	Ø P +0,2	Ø R +0,5	Ø S	W
3.9	8	24.2	33	50	105
4.9	10	30.2	40	55.5	111

N ±0,1	O	Ø P +0,2	Ø R +0,5	Ø S	W
4.9	10	30.2	40	66	137
4.9	10	30.2	40	71	137
7.9	16	40.2	55	75	186
7.9	16	40.2	55	80	191

Mounting flange, Series LU3

- for cylinders with locking units
- Ø 32-100 mm



Ambient temperature min./max.	-20 ... 80 °C
Medium temperature min./max.	-20 ... 80 °C
Weight	See table below

Technical data

Part No.	Piston Ø	Weight
1827001504	32 mm	0.235 kg
1827001505	40 mm	0.36 kg
1827001506	50 mm	0.635 kg
1827001508	63 mm	0.84 kg
1827001433	80 mm	1.62 kg
1827001434	100 mm	2.27 kg

Technical information

Material	
Housing	Nodular graphite iron, galvanized

Dimensions

Dimensions

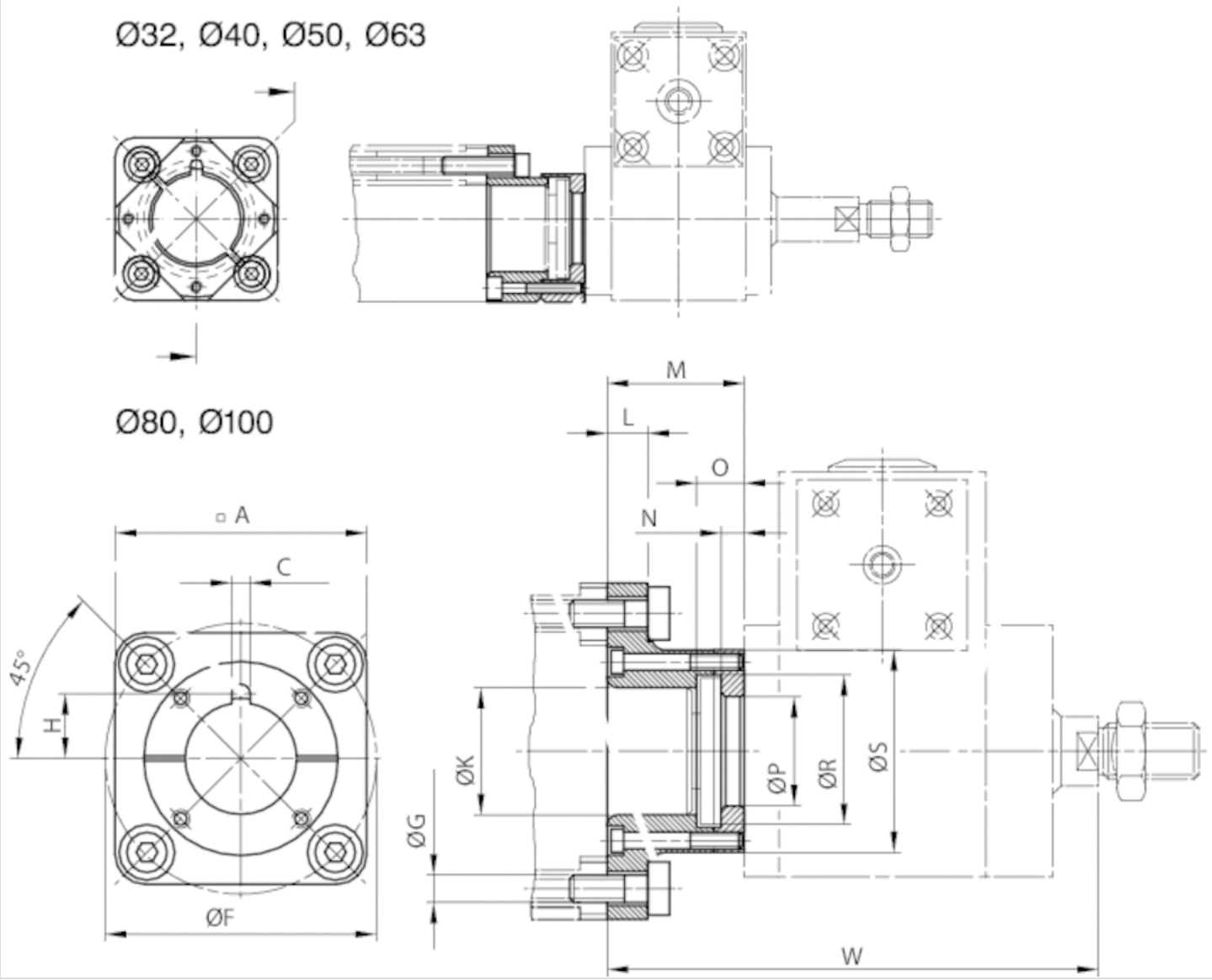

Screws included in scope of delivery
The locking unit can be rotated by 4x90°.

Dimensions

Part No.	A	C +0,1	Ø F ±0,2	G H13	H	Ø K H10	L	M	N -0,1	O	Ø P +0,2	Ø R +0,5
1827001504	50	3.6	46	6.6	13.2	30	7	27.2	3.9	8	24.2	33
1827001505	57	3.6	54	6.6	18.2	35	9.5	33.3	4.9	10	30.2	40
1827001506	68	3.6	66	8.4	18.2	40	11	38.3	4.9	10	30.2	40
1827001508	75	3.6	80	8.4	18.2	45	11	38.3	4.9	10	30.2	40
1827001433	95	6	102	10.5	24.5	45	15	52	7.9	16	40.2	55
1827001434	115	6	126	10.5	24.6	55	15	57	7.9	16	40.2	55

Ø S	W
46.5	105
55.5	111

Ø S	W
66	137
71	137
75	186
80	191

Modular sealing system

- Ø 32 mm ... 125 mm
- For series PRA, TRB, CCL-IS
- Piston Ø 32 40 50, 63 80, 100 125 mm



Working pressure min./max.	1.5 ... 10 bar
Ambient temperature min./max.	See table below
Medium	Compressed air
Oil content of compressed air	0 ... 5 mg/m³

Technical data

Part No.	Piston Ø	Piston rod seal	Scraper
0496400704	32 mm	Acrylonitrile butadiene rubber	Polyester elastomer
0496401107	32 mm	Acrylonitrile butadiene rubber	Polytetrafluorethylene
0496401700	32 mm	Fluorocaoutchouc	Polytetrafluorethylene
0496400402	40 mm	Acrylonitrile butadiene rubber	Brass
0496401409	40 mm	Fluorocaoutchouc	Brass
0496400801	40 mm	Acrylonitrile butadiene rubber	Polyester elastomer
0496401204	40 mm	Acrylonitrile butadiene rubber	Polytetrafluorethylene
0496401808	40 mm	Fluorocaoutchouc	Polytetrafluorethylene
0496400518	50, 63 mm	Acrylonitrile butadiene rubber	Brass
0496401506	50, 63 mm	Fluorocaoutchouc	Brass
0496400909	50, 63 mm	Acrylonitrile butadiene rubber	Polyester elastomer
0496402103	50, 63 mm	Acrylonitrile butadiene rubber	Polytetrafluorethylene
0496401905	50, 63 mm	Fluorocaoutchouc	Polytetrafluorethylene
0496400607	80, 100 mm	Acrylonitrile butadiene rubber	Brass
0496401603	80, 100 mm	Fluorocaoutchouc	Brass
0496401018	80, 100 mm	Acrylonitrile butadiene rubber	Polyester elastomer
0496402200	80, 100 mm	Acrylonitrile butadiene rubber	Polytetrafluorethylene
0496402006	80, 100 mm	Fluorocaoutchouc	Polytetrafluorethylene
0496301404	125 mm	Acrylonitrile butadiene rubber	Brass
0496303105	125 mm	Fluorocaoutchouc	Brass
0496301307	125 mm	Acrylonitrile butadiene rubber	Polyester elastomer
0496301706	125 mm	Acrylonitrile butadiene rubber	Polytetrafluorethylene
0496303202	125 mm	Fluorocaoutchouc	Polytetrafluorethylene

Part No.	Ambient temperature min./max.	Application area
0496400704	-20 ... 80 °C	1)
0496401107	-20 ... 80 °C	2)

Part No.	Ambient temperature min./max.	Application area
0496401700	-10 ... 150 °C	2)
0496400402	-20 ... 80 °C	3)
0496401409	-10 ... 150 °C	3)
0496400801	-20 ... 80 °C	1)
0496401204	-20 ... 80 °C	2)
0496401808	-10 ... 150 °C	2)
0496400518	-20 ... 80 °C	3)
0496401506	-10 ... 150 °C	3)
0496400909	-20 ... 80 °C	1)
0496402103	-20 ... 80 °C	2)
0496401905	-10 ... 150 °C	2)
0496400607	-20 ... 80 °C	3)
0496401603	-10 ... 150 °C	3)
0496401018	-20 ... 80 °C	1)
0496402200	-20 ... 80 °C	2)
0496402006	-10 ... 150 °C	2)
0496301404	-20 ... 80 °C	3)
0496303105	-10 ... 150 °C	3)
0496301307	-20 ... 80 °C	1)
0496301706	-20 ... 80 °C	2)
0496303202	-10 ... 150 °C	2)

1)Application area Paper/printing industry Textile industry

2)Application area Textile industry Food industry Chemical industry Sugar production

3)Application area Chemical industry Sugar production Steel construction Automotive industry Woodworking industry

Technical information

Material	
Housing	Aluminum, anodized
Scraper	Polyester elastomer Polytetrafluorethylene Brass
Piston rod seal	Acrylonitrile butadiene rubber Fluorocaoutchouc

Dimensions

For cylinder diameters: 32-40 mm, Dimensions in mm

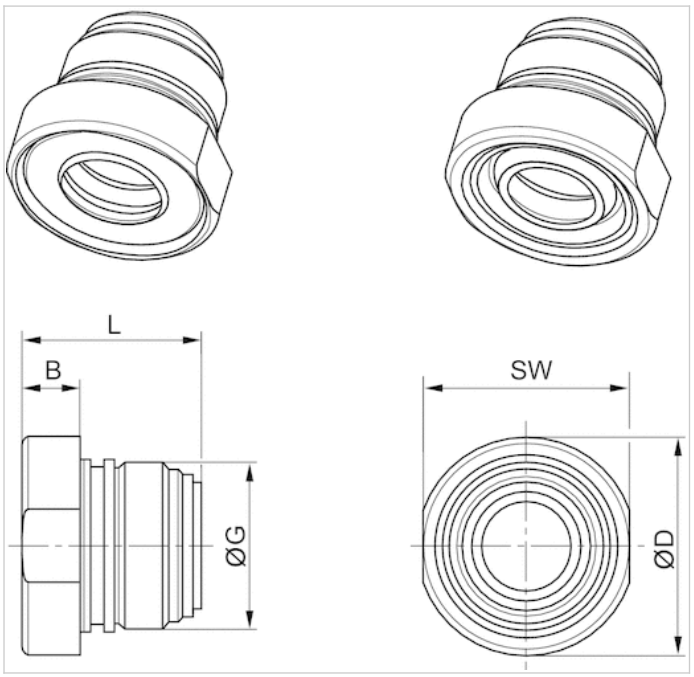

For cylinder diameters: 50 ... 125 mm, Dimensions in mm

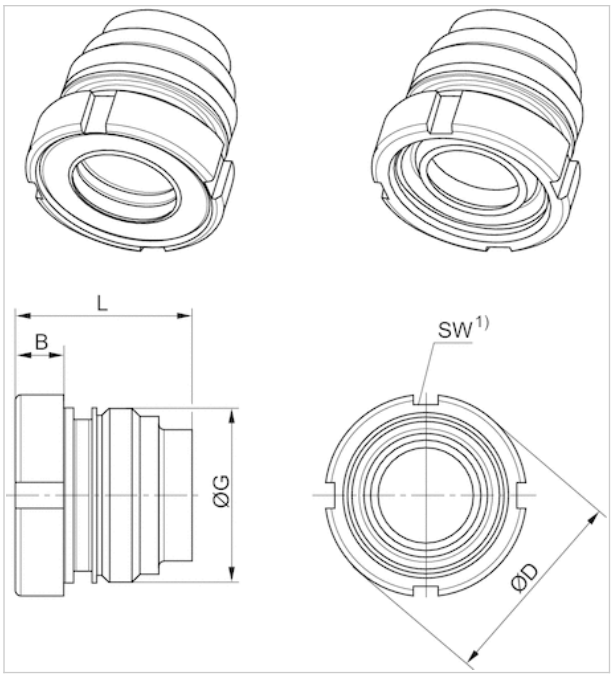

1) Can be mounted with hook wrench in accordance with DIN 1810 A

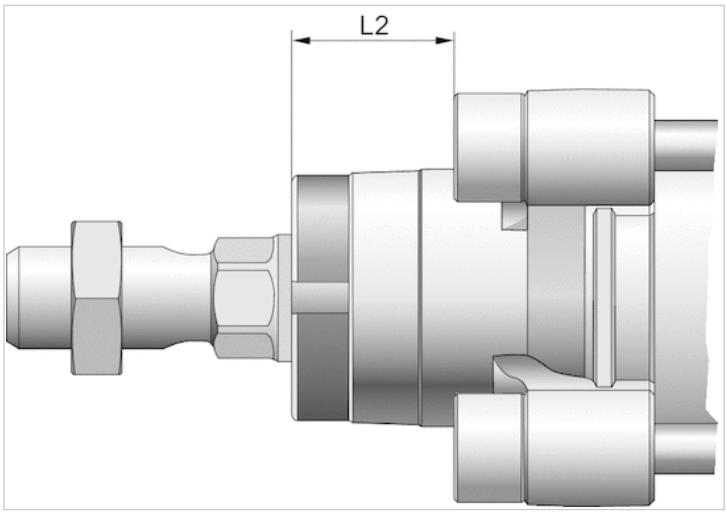

Dimensions

Piston Ø	B	ØD	G	L	L2	SW
32	6.7	24.5	M22x1	23	16.25	23
40	9.2	34	M26x1,5	28.1	18.25	32
50, 63	9	38.5	M33x2	33.5	25	40-42
80, 100	10	44	M40x2	44	33	45-50
125	12	57	M50x2	56	45	58-62

Dimensions

For cylinder diameters: 32-40 mm, Dimensions in mm

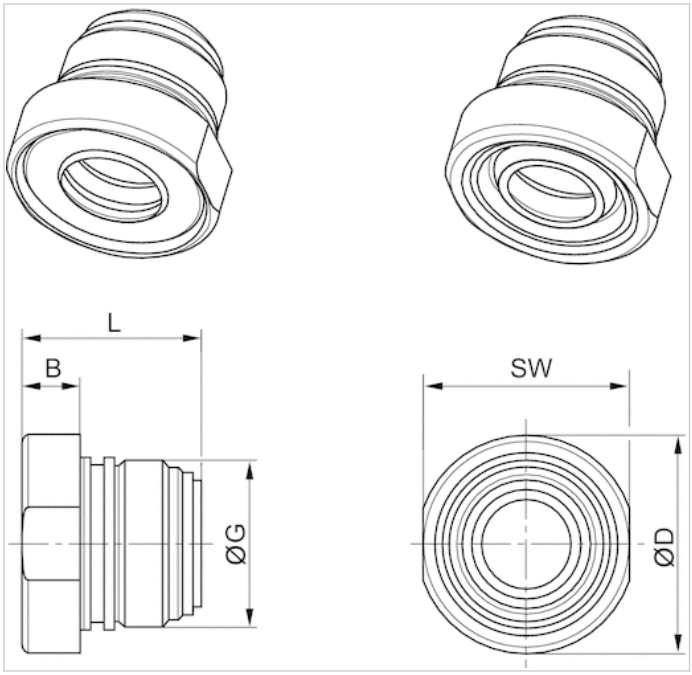

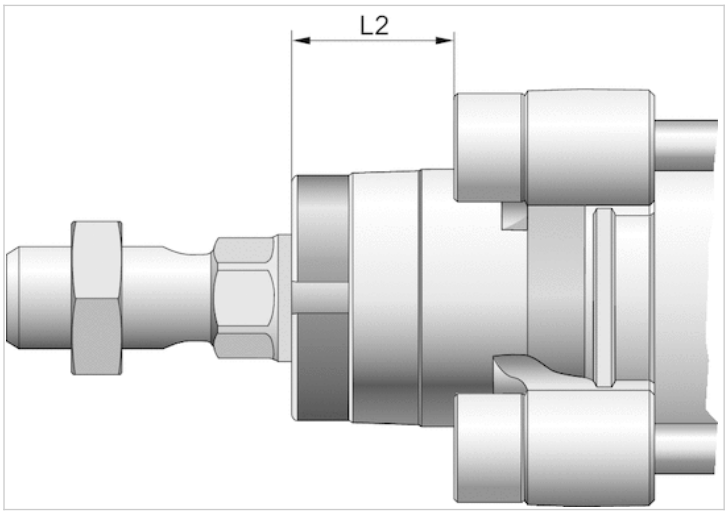

Dimensions

Piston Ø	B	ØD	G	L	L2	SW
32	6.7	24.5	M22x1	23	16.25	23
40	9.2	34	M26x1,5	28.1	18.25	32
50, 63	9	38.5	M33x2	33.5	25	40-42
80, 100	10	44	M40x2	44	33	45-50
125	12	57	M50x2	56	45	58-62

Dimensions

For cylinder diameters: 50 ... 125 mm, Dimensions in mm

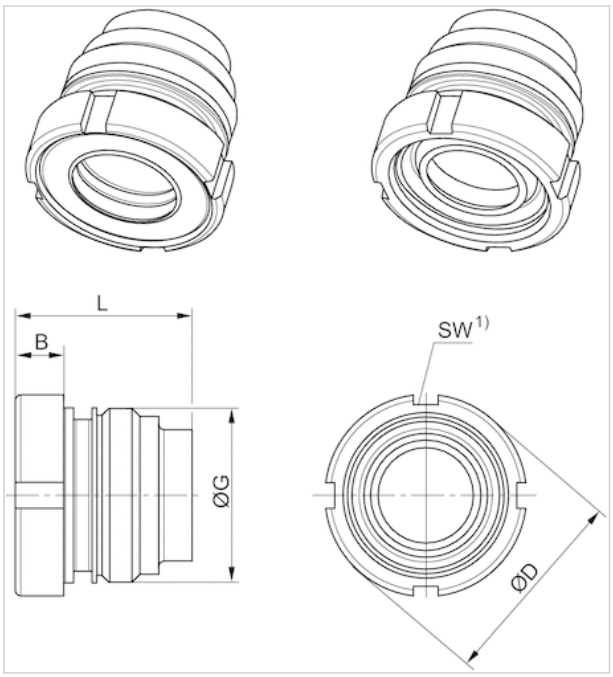

1) Can be mounted with hook wrench in accordance with DIN 1810 A

Sensor, Series ST4

- 4 mm T-slot
- with cable
- open cable ends, 3-pin
- UL certification
- Reed electronic PNP electronic NPN
- Direct mounting for series PRA, SSI, GSU, RTC, CKP, GPC, MSC, MSN, RCM, CVI
- Indirect mounting for series MNI, CSL-RD, ICM



Certificates	UL (Underwriters Laboratories) cULus RoHS
Ambient temperature min./max.	-30 ... 80 °C
Protection class	IP65, IP67
Switching point precision	±0,1 mT
Min./max. DC operating voltage	See table below
Switching logic	NO (make contact)
Display	LED
LED status display	Yellow
Vibration resistance	10 - 55 Hz, 1 mm
Shock resistance	30 g / 11 ms
Cable length L	3 5 m
Mounting screw	Combination: slotted and hexagon socket

Technical data

Part No.		for
R412019488		PRA, SSI, GSU, RTC, CKP, GPC, MSC, MSN, RCM, CVI
R412019489		PRA, SSI, GSU, RTC, CKP, GPC, MSC, MSN, RCM, CVI
R412019680		PRA, SSI, GSU, RTC, CKP, GPC, MSC, MSN, RCM, CVI
R412019681		PRA, SSI, GSU, RTC, CKP, GPC, MSC, MSN, RCM, CVI
R412019684		PRA, SSI, GSU, RTC, CKP, GPC, MSC, MSN, RCM, CVI
R412019685		PRA, SSI, GSU, RTC, CKP, GPC, MSC, MSN, RCM, CVI

Part No.	Type of contact	Cable length L	Min./max. DC operating voltage
R412019488	Reed	3 m	5 ... 30 V DC
R412019489	Reed	5 m	5 ... 30 V DC
R412019680	electronic PNP	3 m	10 ... 30 V DC
R412019681	electronic PNP	5 m	10 ... 30 V DC
R412019684	electronic NPN	3 m	10 ... 30 V DC
R412019685	electronic NPN	5 m	10 ... 30 V DC

Part No.	Voltage drop U at Imax	DC switching current, max.
R412019488	≤ 0,5 V	0.13 A
R412019489	≤ 0,5 V	0.13 A
R412019680	≤ 2,5 V	0.1 A
R412019681	≤ 2,5 V	0.1 A

Part No.	Voltage drop U at Imax	DC switching current, max.
R412019684	≤ 2,5 V	0.1 A
R412019685	≤ 2,5 V	0.1 A

Part No.	AC switching current, max.	Switching capacity
R412019488	0.13 A	3 W / 3 VA
R412019489	0.13 A	3 W / 3 VA
R412019680	-	-
R412019681	-	-
R412019684	-	-
R412019685	-	-

Part No.	Version
R412019488	Protected against polarity reversal
R412019489	Protected against polarity reversal
R412019680	short circuit resistant Protected against polarity reversal
R412019681	short circuit resistant Protected against polarity reversal
R412019684	short circuit resistant Protected against polarity reversal
R412019685	short circuit resistant Protected against polarity reversal

Technical information

The max. switching capacity must not be exceeded.

Technical information

Material	
Housing	Polyamide fiber-glass reinforced
Cable sheath	Polyurethane

Dimensions

Dimensions

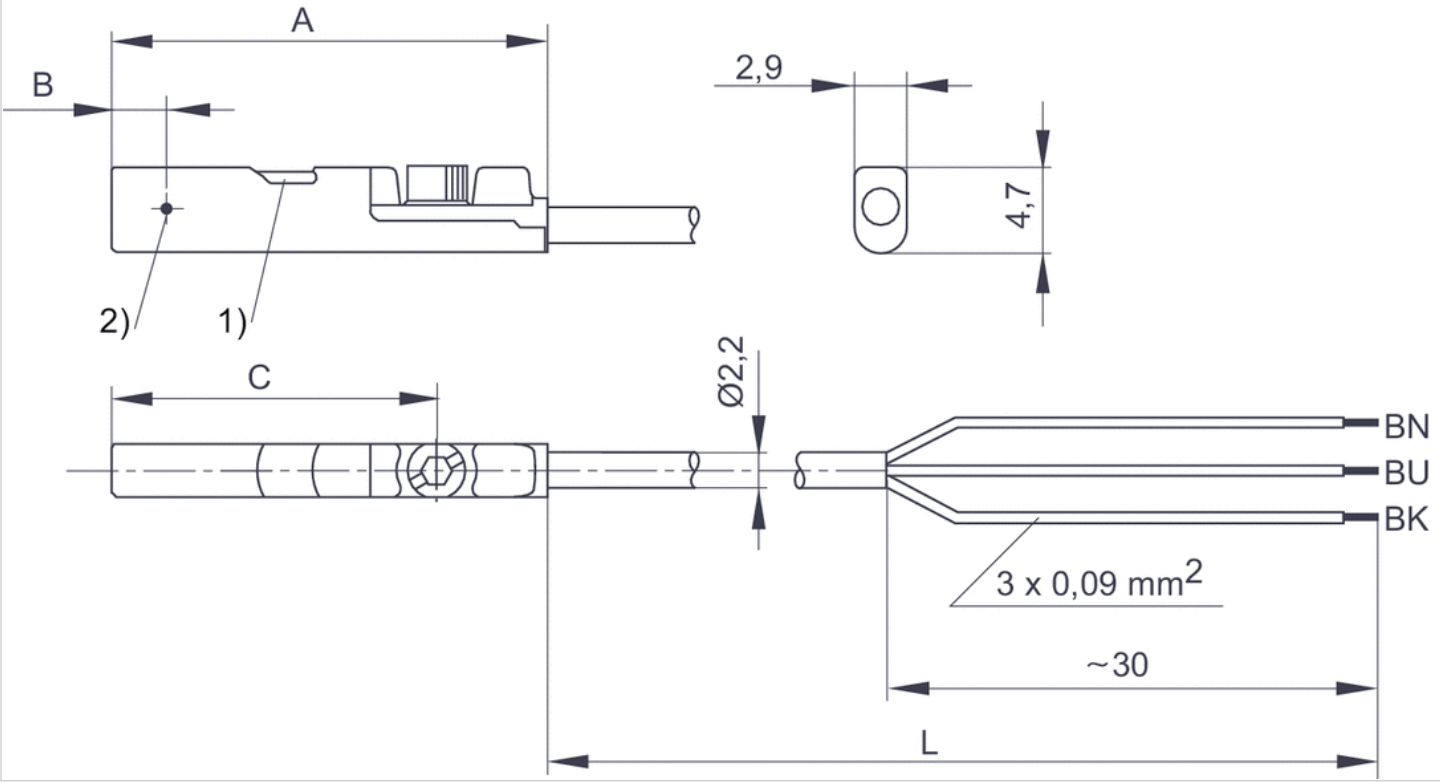

1) LED 2) Switching point
L = cable length
BN = brown, BK = black, BU = blue

Dimensions

Part No.	A	B	C
R412019488	26.3	6.3	20.3
R412019489	26.3	6.3	20.3
R412019680	23.7	2.8	17.7
R412019681	23.7	2.8	17.7
R412019684	23.7	2.8	17.7
R412019685	23.7	2.8	17.7

Sensor, Series ST4

- 4 mm T-slot
- with cable
- open cable ends
- With stretched impulse
- With stretched impulse
- electronic PNP
- Direct mounting for series PRA, SSI, GSU, RTC, CKP, GPC, MSC, MSN, RCM, CVI
- Indirect mounting for series MNI, CSL-RD, ICM



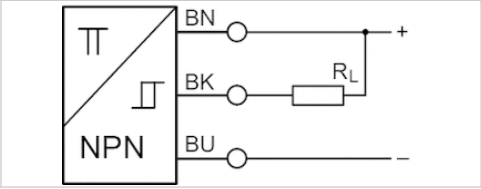

Certificates	RoHS
Ambient temperature min./max.	-30 ... 80 °C
Protection class	IP65, IP67
Switching point precision	±0,1 mT
Min./max. DC operating voltage	10 ... 30 V DC
Switching logic	NO (make contact)
Pulse stretching	20 ms
Display	LED
LED status display	Yellow
Vibration resistance	10 - 55 Hz, 1 mm
Shock resistance	30 g / 11 ms
Cable length L	5 m
Mounting screw	Combination: slotted and hexagon socket

Technical data

Part No.	for	Type of contact
R412024124	PRA, SSI, GSU, RTC, CKP, GPC, MSC, MSN, RCM, CVI	electronic PNP

Part No.	Cable length L	Voltage drop U at Imax	DC switching current, max.
R412024124	5 m	≤ 2,5 V	0.1 A

Part No.	Switch signal
R412024124	With stretched impulse

Technical information

The max. switching capacity must not be exceeded.

Technical information

Material	
Housing	Polyamide fiber-glass reinforced
Cable sheath	Polyurethane

Dimensions

Dimensions

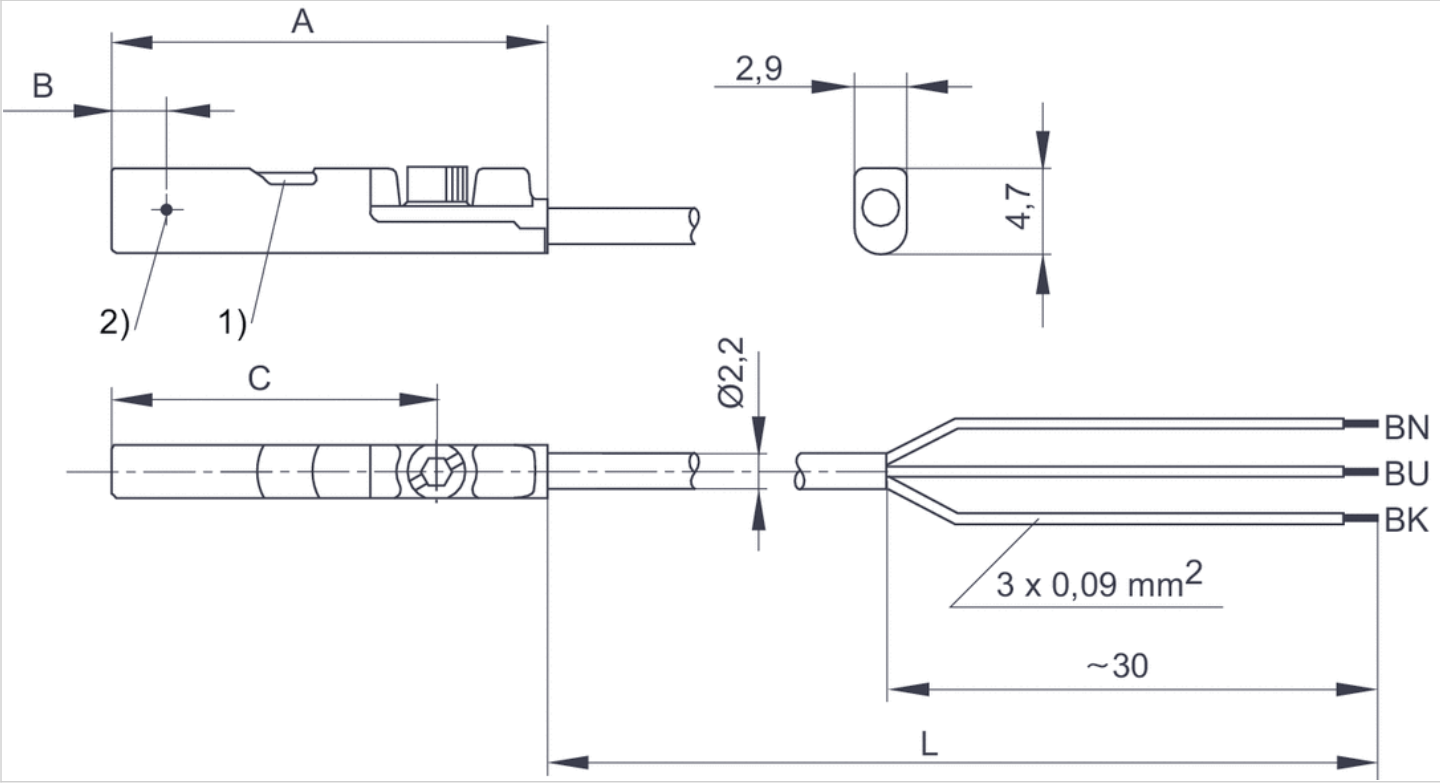

1) LED 2) Switching point
L = cable length
BN = brown, BK = black, BU = blue

Dimensions

Part No.	A	B	C
R412024124	23.7	2.8	17.7

Sensor, Series ST4

- 4 mm T-slot
- with cable
- Plug, M8, 3-pin
- UL certification
- Reed electronic PNP electronic NPN
- Direct mounting for series PRA, SSI, GSU, RTC, CKP, GSP, MSC, MSN, RCM, CVI
- Indirect mounting for series MNI, CSL-RD, ICM



Certificates	UL (Underwriters Laboratories) cULus RoHS
Ambient temperature min./max.	-30 ... 80 °C
Protection class	IP65, IP67
Switching point precision	±0,1 mT
Min./max. DC operating voltage	See table below
Switching logic	NO (make contact)
Display	LED
LED status display	Yellow
Vibration resistance	10 - 55 Hz, 1 mm
Shock resistance	30 g / 11 ms
Cable length L	0.3 m
Mounting screw	Combination: slotted and hexagon socket

Technical data

Part No.		for
R412019682		PRA, SSI, GSU, RTC, CKP, GSP, MSC, MSN, RCM, CVI
R412019683		PRA, SSI, GSU, RTC, CKP, GSP, MSC, MSN, RCM, CVI
R412019694		PRA, SSI, GSU, RTC, CKP, GSP, MSC, MSN, RCM, CVI

Part No.	Type of contact	Cable length L	Min./max. DC operating voltage
R412019682	Reed	0.3 m	5 ... 30 V DC
R412019683	electronic PNP	0.3 m	10 ... 30 V DC
R412019694	electronic NPN	0.3 m	10 ... 30 V DC

Part No.	Voltage drop U at Imax	DC switching current, max.
R412019682	≤ 0,5 V	0.13 A
R412019683	≤ 2,5 V	0.1 A
R412019694	≤ 2,5 V	0.1 A

Part No.	AC switching current, max.	Switching capacity
R412019682	0.13 A	3 W / 3 VA
R412019683	-	-
R412019694	-	-

Part No.	Version
R412019682	Protected against polarity reversal
R412019683	short circuit resistant Protected against polarity reversal
R412019694	short circuit resistant Protected against polarity reversal

Technical information

The max. switching capacity must not be exceeded.

Technical information

Material	
Housing	Polyamide fiber-glass reinforced
Cable sheath	Polyurethane

Dimensions

Dimensions

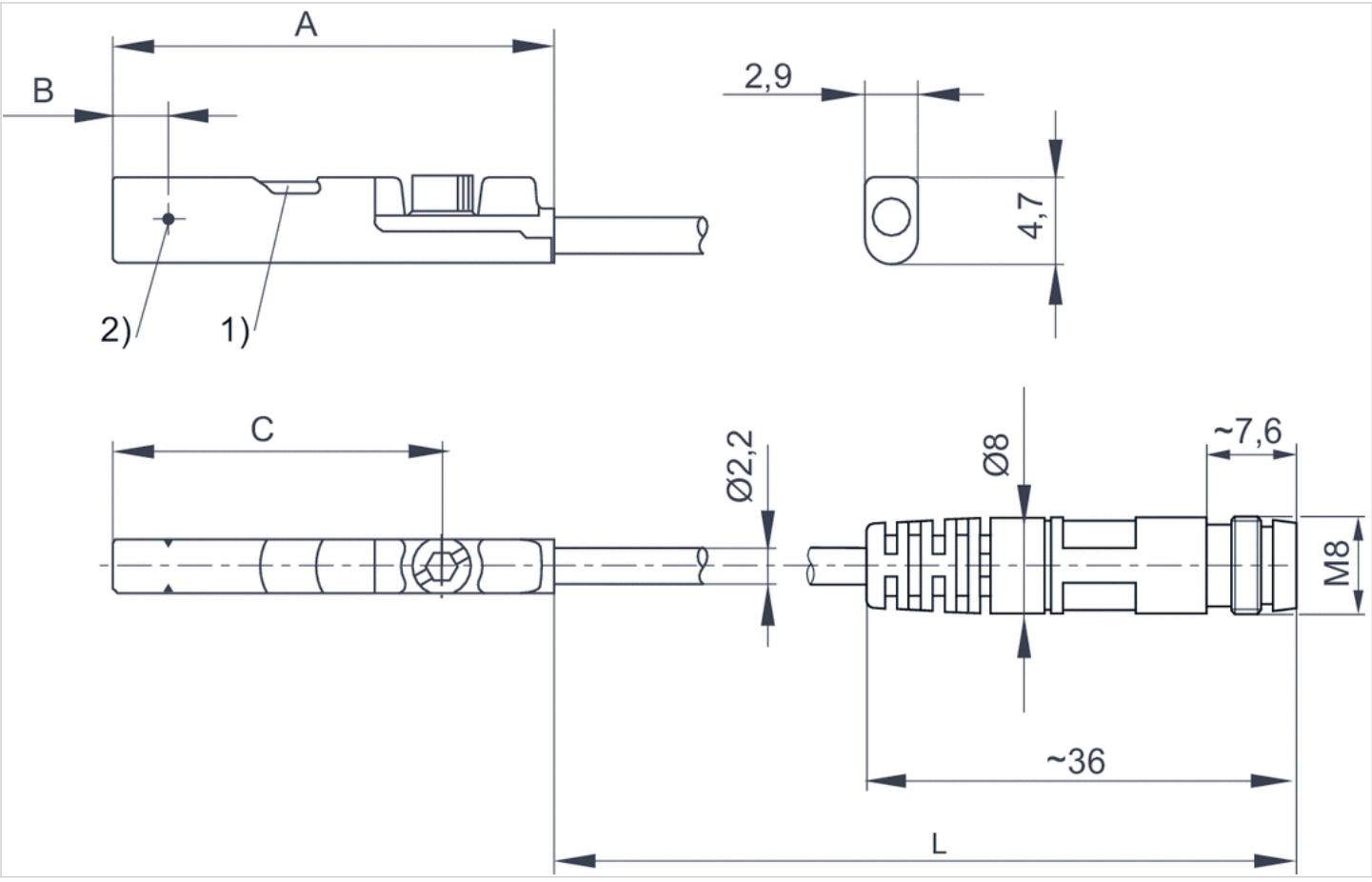

1) LED 2) Switching point
L = cable length

Dimensions

Part No.	A	B	C
R412019682	26.3	6.3	20.3
R412019683	23.7	2.8	17.7
R412019694	23.7	2.8	17.7

Pin assignments

Pin assignments

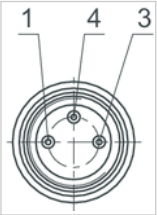

Pin	1	3	4
Allocation	(+)	(-)	(OUT)

Sensor, Series ST4

- 4 mm T-slot
- with cable
- Plug, M8, 3-pin, with knurled screw
- UL certification
- Reed electronic PNP
- Direct mounting for series PRA, SSI, GSU, RTC, CKP, GPC, MSC, MSN, RCM, CVI
- Indirect mounting for series MNI, CSL-RD, ICM



Certificates	UL (Underwriters Laboratories) cULus RoHS
Ambient temperature min./max.	-30 ... 80 °C
Protection class	IP65, IP67
Switching point precision	±0,1 mT
Min./max. DC operating voltage	See table below
Switching logic	NO (make contact)
Display	LED
LED status display	Yellow
Vibration resistance	10 - 55 Hz, 1 mm
Shock resistance	30 g / 11 ms
Cable length L	0.3 0.5 m
Mounting screw	Combination: slotted and hexagon socket

Technical data

Part No.		for
R412019490		PRA, SSI, GSU, RTC, CKP, GPC, MSC, MSN, RCM, CVI
R412019686		PRA, SSI, GSU, RTC, CKP, GPC, MSC, MSN, RCM, CVI
R412019493		PRA, SSI, GSU, RTC, CKP, GPC, MSC, MSN, RCM, CVI
R412019687		PRA, SSI, GSU, RTC, CKP, GPC, MSC, MSN, RCM, CVI

Part No.	Type of contact	Cable length L	Min./max. DC operating voltage
R412019490	Reed	0.3 m	5 ... 30 V DC
R412019686	Reed	0.5 m	5 ... 30 V DC
R412019493	electronic PNP	0.3 m	10 ... 30 V DC
R412019687	electronic PNP	0.5 m	10 ... 30 V DC

Part No.	Voltage drop U at Imax	DC switching current, max.
R412019490	≤ 0,5 V	0.13 A
R412019686	≤ 0,5 V	0.13 A
R412019493	≤ 2,5 V	0.1 A
R412019687	≤ 2,5 V	0.1 A

Part No.	AC switching current, max.	Switching capacity
R412019490	0.13 A	3 W / 3 VA

Part No.	AC switching current, max.	Switching capacity
R412019686	0.13 A	3 W / 3 VA
R412019493	-	-
R412019687	-	-

Part No.	Version
R412019490	Protected against polarity reversal
R412019686	Protected against polarity reversal
R412019493	short circuit resistant Protected against polarity reversal
R412019687	short circuit resistant Protected against polarity reversal

Technical information

The max. switching capacity must not be exceeded.

Technical information

Material	
Housing	Polyamide fiber-glass reinforced
Cable sheath	Polyurethane

Dimensions

Dimensions

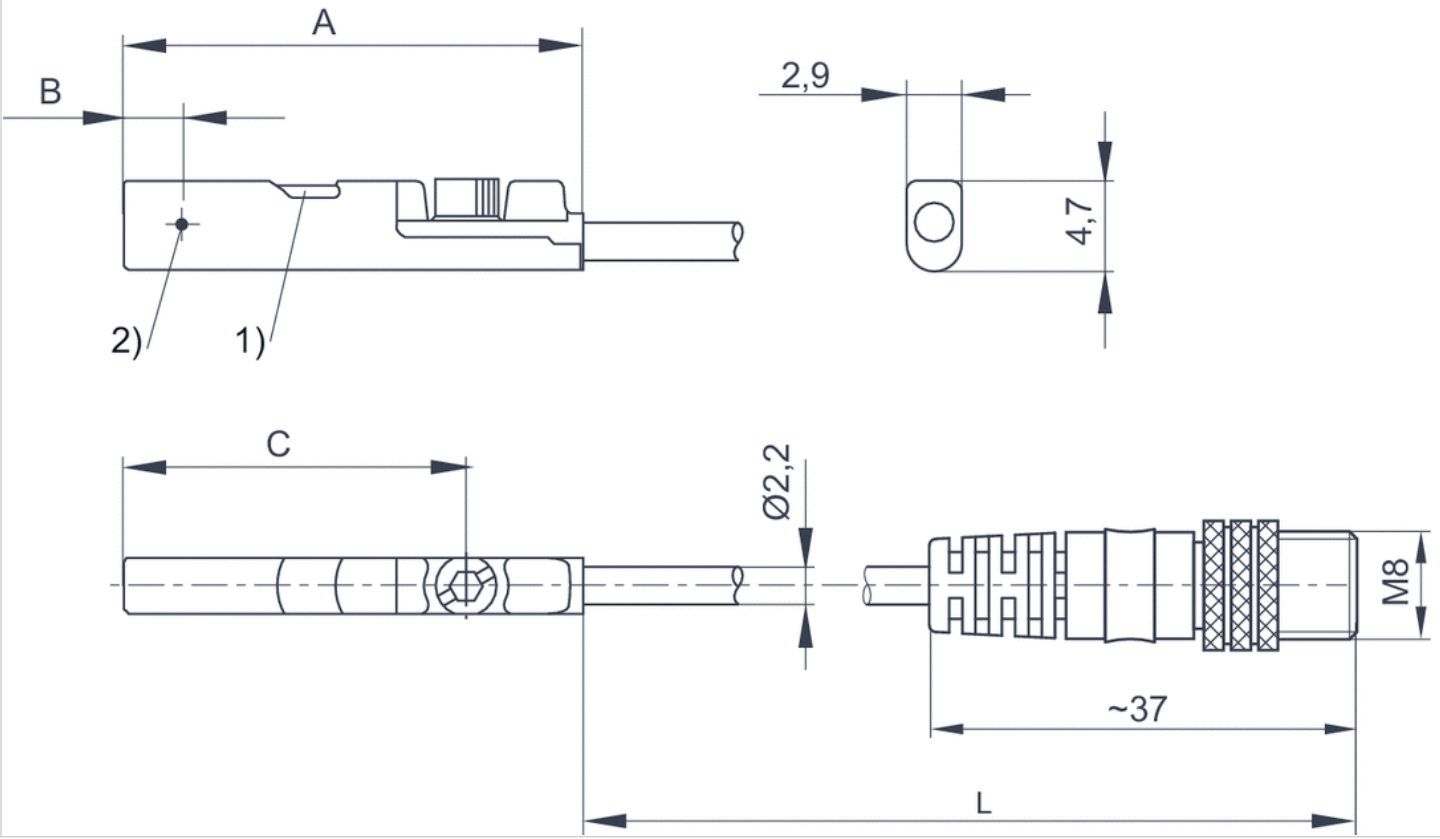

1) LED 2) Switching point
L = cable length

Dimensions

Part No.	A	B	C
R412019490	26.3	6.3	20.3
R412019686	26.3	6.3	20.3
R412019493	23.7	2.8	17.7
R412019687	23.7	2.8	17.7

Pin assignments

Pin assignments

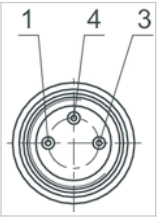

Pin	1	3	4
Allocation	(+)	(-)	(OUT)

Sensor, Series ST4

- 4 mm T-slot
- with cable
- Plug, M8, 3-pin Plug, M8, 3-pin, with knurled screw
- With stretched impulse
- With stretched impulse
- electronic NPN electronic PNP
- Direct mounting for series PRA, SSI, GSU, RTC, CKP, GPC, MSC, MSN, RCM, CVI
- Indirect mounting for series MNI, CSL-RD, ICM



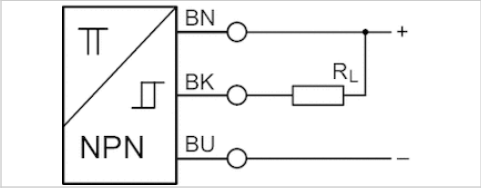

Certificates	RoHS
Ambient temperature min./max.	-30 ... 80 °C
Protection class	IP65, IP67
Switching point precision	±0,1 mT
Min./max. DC operating voltage	10 ... 30 V DC
Switching logic	NO (make contact)
Pulse stretching	20 ms
Display	LED
LED status display	Yellow
Vibration resistance	10 - 55 Hz, 1 mm
Shock resistance	30 g / 11 ms
Cable length L	0.3 m
Mounting screw	Combination: slotted and hexagon socket

Technical data

Part No.	for	Type of contact
R412024123	PRA, SSI, GSU, RTC, CKP, GPC, MSC, MSN, RCM, CVI	electronic NPN
R412024125	PRA, SSI, GSU, RTC, CKP, GPC, MSC, MSN, RCM, CVI	electronic PNP

Part No.	Cable length L	Voltage drop U at Imax	DC switching current, max.
R412024123	0.3 m	≤ 2,5 V	0.1 A
R412024125	0.3 m	≤ 2,5 V	0.1 A

Part No.	Switch signal	
R412024123	With stretched impulse	1)
R412024125	With stretched impulse	2)

1) Plug M8, 3-pin

2) Plug M8, 3-pin with knurled screw

Technical information

The max. switching capacity must not be exceeded.

Technical information

Material	
Housing	Polyamide fiber-glass reinforced
Cable sheath	Polyurethane

Dimensions

Dimensions

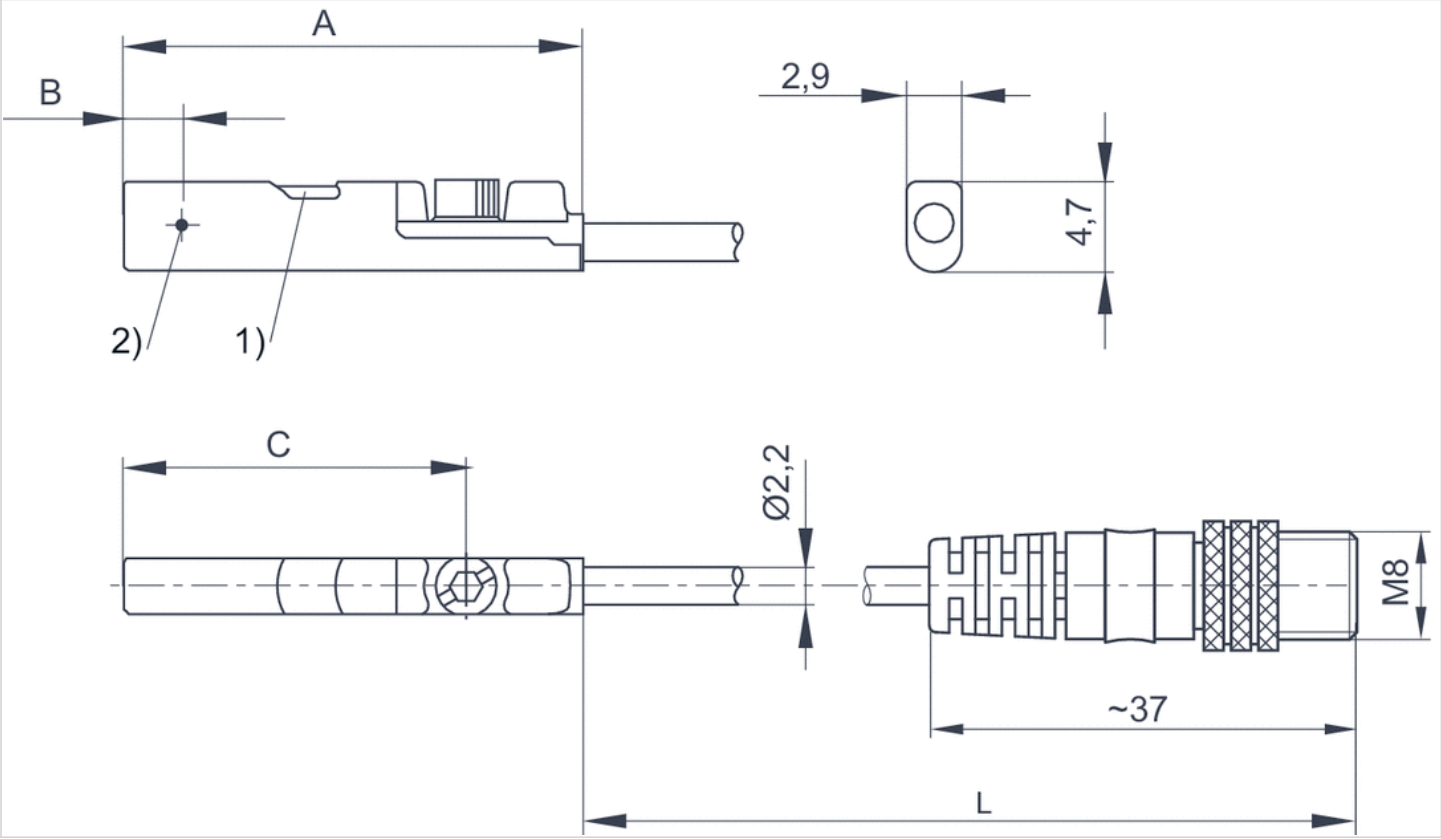

1) LED 2) Switching point
L = cable length

Pin assignments

Pin assignments

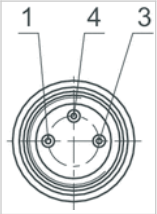

Pin	1	3	4
Allocation	(+)	(-)	(OUT)

Sensor, Series ST4

- 4 mm T-slot
- with cable
- Plug, M12, 3-pin, with knurled screw
- UL certification
- Reed electronic PNP
- Direct mounting for series PRA, SSI, GSU, RTC, CKP, GPC, MSC, MSN, RCM, CVI
- Indirect mounting for series MNI, CSL-RD, ICM



Certificates	UL (Underwriters Laboratories) cULus RoHS
Ambient temperature min./max.	-30 ... 80 °C
Protection class	IP65, IP67
Switching point precision	±0,1 mT
Min./max. DC operating voltage	See table below
Switching logic	NO (make contact)
Display	LED
LED status display	Yellow
Vibration resistance	10 - 55 Hz, 1 mm
Shock resistance	30 g / 11 ms
Cable length L	0.3 m
Mounting screw	Combination: slotted and hexagon socket

Technical data

Part No.		for
R412019688		PRA, SSI, GSU, RTC, CKP, GPC, MSC, MSN, RCM, CVI
R412019689		PRA, SSI, GSU, RTC, CKP, GPC, MSC, MSN, RCM, CVI

Part No.	Type of contact	Cable length L	Min./max. DC operating voltage
R412019688	Reed	0.3 m	5 ... 30 V DC
R412019689	electronic PNP	0.3 m	10 ... 30 V DC

Part No.	Voltage drop U at Imax	DC switching current, max.
R412019688	≤ 0,5 V	0.13 A
R412019689	≤ 2,5 V	0.1 A

Part No.	AC switching current, max.	Switching capacity
R412019688	0.13 A	3 W / 3 VA
R412019689	-	-

Part No.	Version
R412019688	Protected against polarity reversal

Part No.	Version
R412019689	short circuit resistant Protected against polarity reversal

Technical information

The max. switching capacity must not be exceeded.

Technical information

Material	
Housing	Polyamide fiber-glass reinforced
Cable sheath	Polyurethane

Dimensions

Dimensions

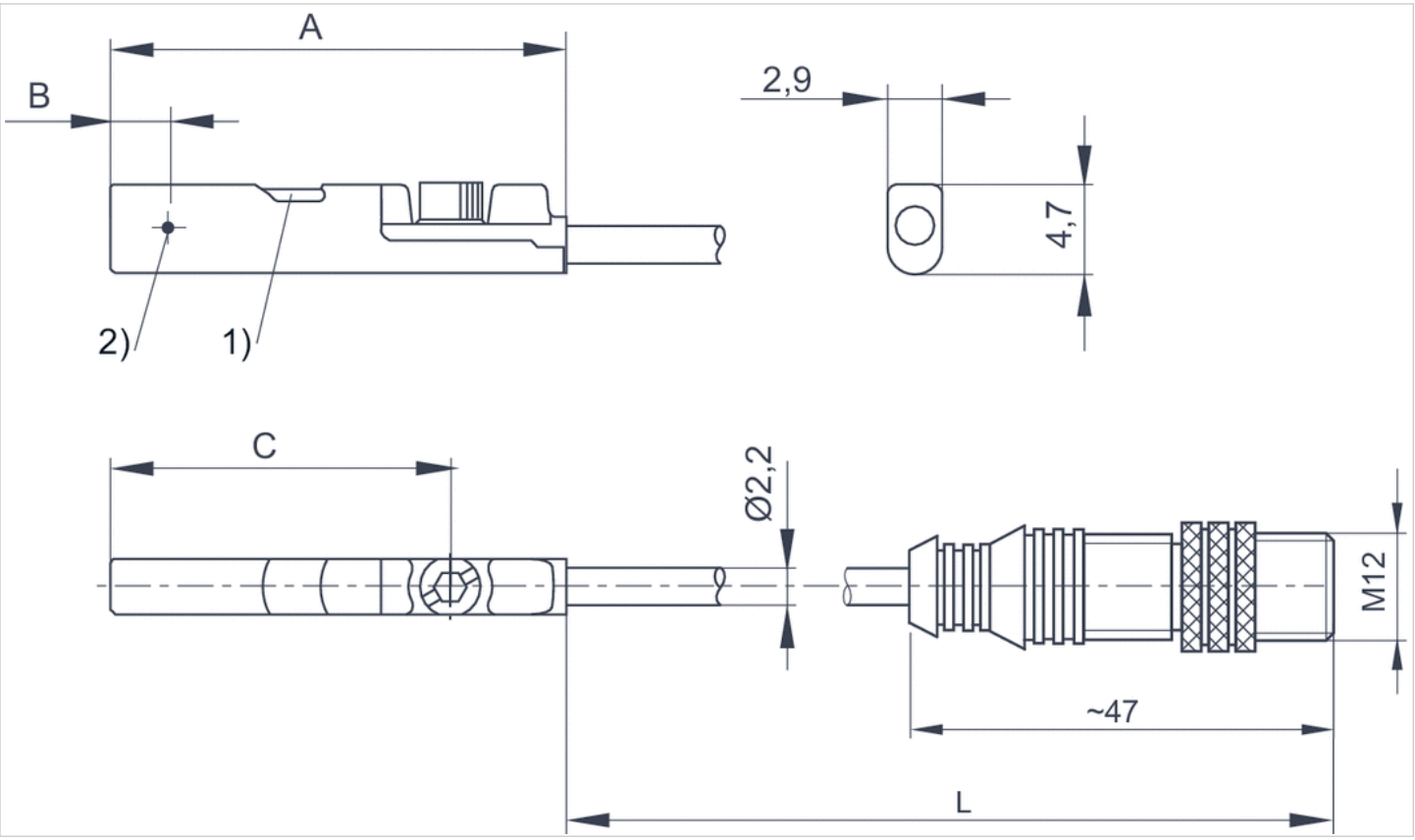

1) LED 2) Switching point
L = cable length

Dimensions

Part No.	A	B	C
R412019688	26.3	6.3	20.3
R412019689	23.7	2.8	17.7

Pin assignments

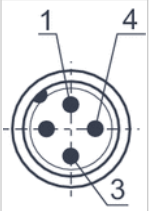

Pin	1	3	4
Allocation	(+)	(-)	(OUT)

Sensors, Series ST4-2P

- 4 mm T-slot
- number of switching points 2
- with cable
- without wire end ferrule, tin-plated, 4-pin
- electronic PNP
- 2 switching points
- electronic PNP
- Direct mounting for series PRA, SSI, RTC, GPC, MSC, MSN, RCM, CVI
- Indirect mounting for series MNI, CSL-RD, ICM



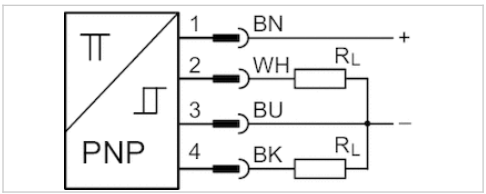

Certificates	RoHS
Ambient temperature min./max.	-20 ... 75 °C
Protection class	IP65, IP67
number of switching points	2
Power consumption	15 mA
Min./max. DC operating voltage	12 ... 30 V DC
Repetitive precision max. measuring range	0,1 mT
Hysteresis	1 mT
Switching logic	NO (make contact)
Display	LED
LED status display	Yellow
Display	2 LED
Vibration resistance	10 - 55 Hz, 1 mm
Shock resistance	30 g / 11 ms
Cable length L	2 m
Mounting screw	with hexagon socket

Technical data

Part No.	for	Type of contact	Cable length L
R412010139	PRA, SSI, RTC, GPC, MSC, MSN, RCM, CVI	electronic PNP	2 m

Part No.	Detection range max.	Voltage drop U at Imax	DC switching current, max.
R412010139	50 mm	≤ 2,2 V	0.15 A

Part No.	Function	Version
R412010139	electronic PNP	short circuit resistant Protected against polarity reversal

Technical information

Material	
Housing	Polyamide
Cable sheath	Polyurethane

Dimensions

Dimensions

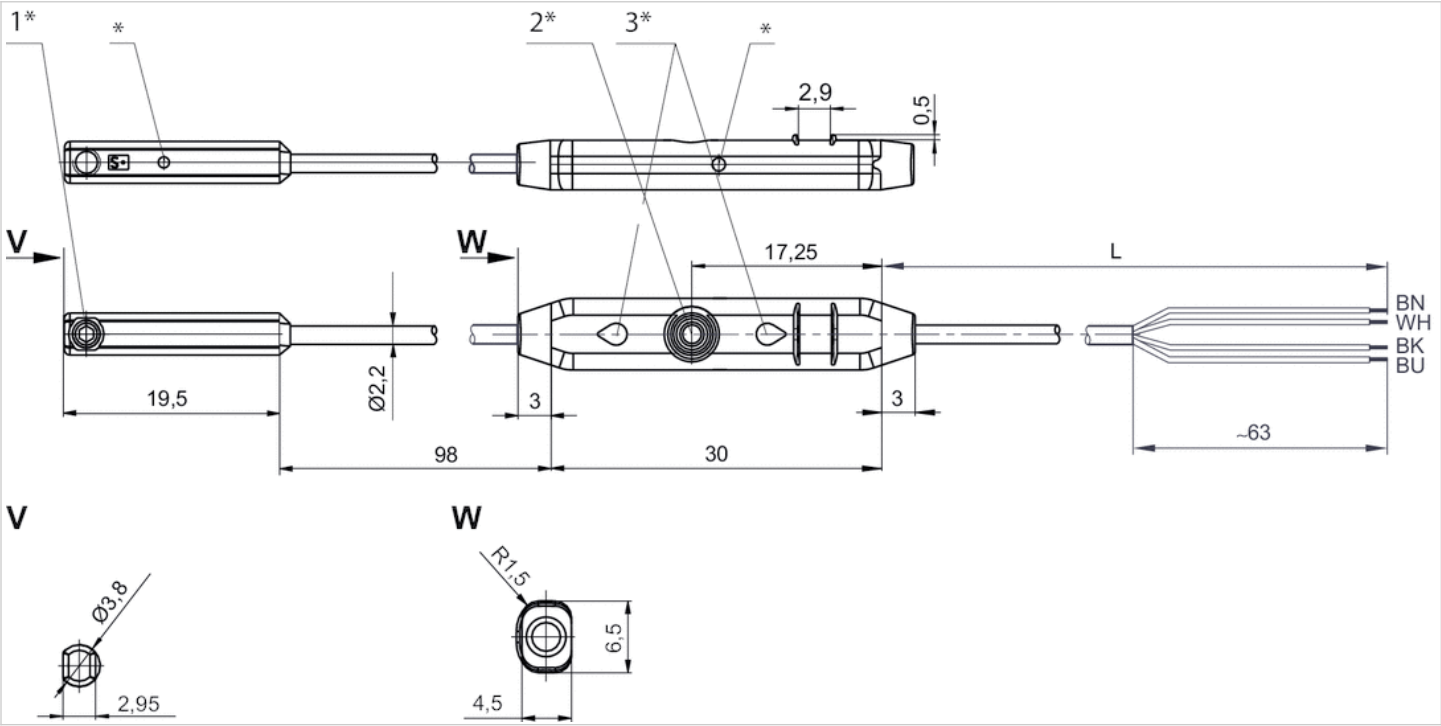

1* = mounting screw 2* = teach button 3* = LED
L = cable length
(1) BN=brown
(2) WH=white
(3) BU=blue
(4) BK=black
* Switching point

Sensors, Series ST4-2P

- 4 mm T-slot
- number of switching points 2
- with cable
- Plug, M8x1, 4-pin, with knurled screw
- electronic PNP
- 2 switching points
- electronic PNP
- Direct mounting for series PRA, SSI, RTC, GPC, MSC, MSN, RCM, CVI
- Indirect mounting for series MNI, CSL-RD, ICM



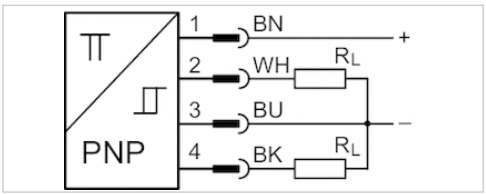

Certificates	RoHS
Ambient temperature min./max.	-20 ... 75 °C
Protection class	IP65, IP67
number of switching points	2
Power consumption	15 mA
Min./max. DC operating voltage	12 ... 30 V DC
Repetitive precision max. measuring range	0,1 mT
Hysteresis	1 mT
Switching logic	NO (make contact)
Display	LED
LED status display	Yellow
Display	2 LED
Vibration resistance	10 - 55 Hz, 1 mm
Shock resistance	30 g / 11 ms
Cable length L	0.3 m
Mounting screw	with hexagon socket

Technical data

Part No.	for	Type of contact	Cable length L
R412010140	PRA, SSI, RTC, GPC, MSC, MSN, RCM, CVI	electronic PNP	0.3 m

Part No.	Detection range max.	Voltage drop U at Imax	Function
R412010140	50 mm	≤ 2,2 V	electronic PNP

Part No.	Version
R412010140	short circuit resistant Protected against polarity reversal

Technical information

Material	
Housing	Polyamide
Cable sheath	Polyurethane

Dimensions

Dimensions

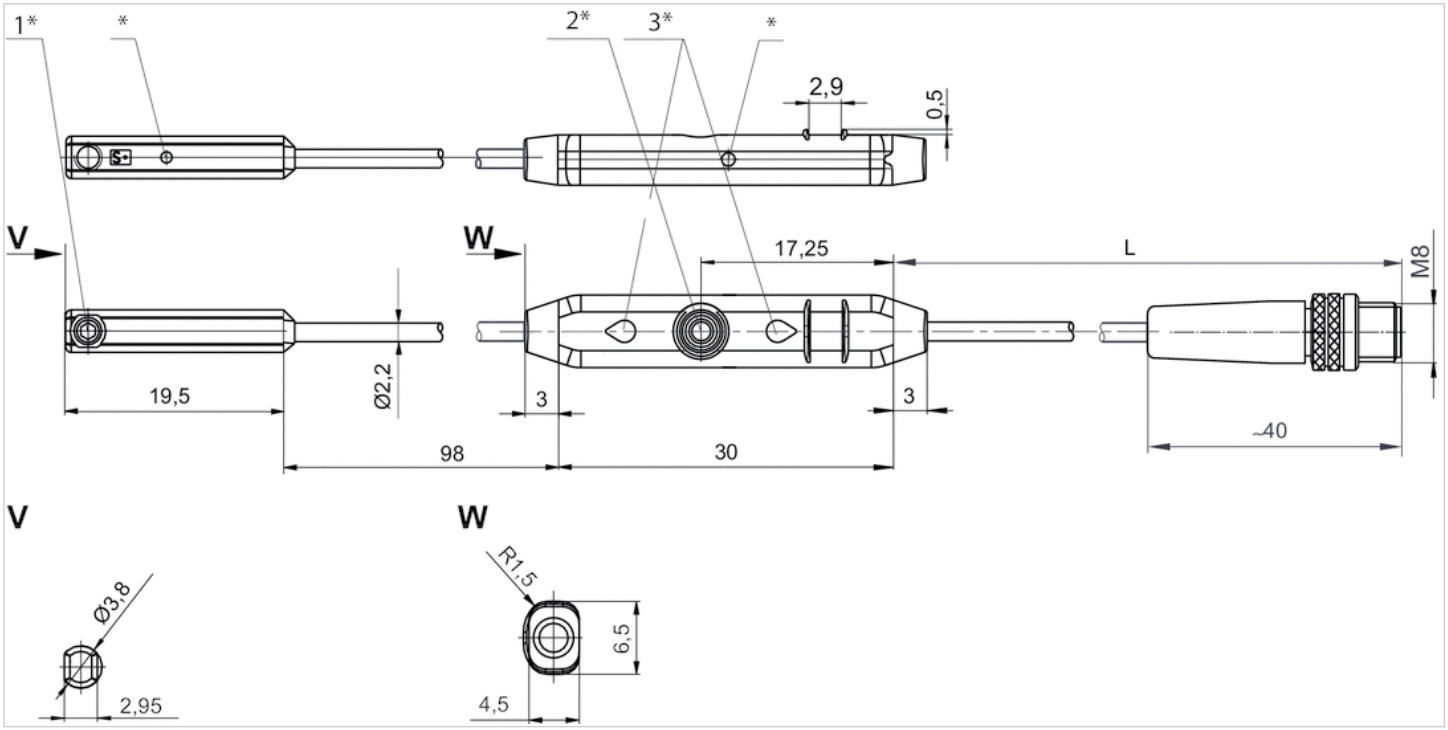

1* = mounting screw 2* = teach button 3* = LED
L = cable length
* Switching point

Pin assignments

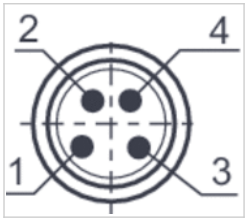

Pin	1	2	3	4
Allocation	(+)	(OUT)	(-)	(OUT)

Sensors, Series ST4-2P

- 4 mm T-slot
- number of switching points 2
- with cable
- Plug, M12x1, 4-pin, with knurled screw
- IO-Link, 2 switching points
- electronic PNP
- Direct mounting for series PRA, SSI, RTC, GPC, MSC, MSN, RCM, CVI
- Indirect mounting for series MNI, CSL-RD, ICM



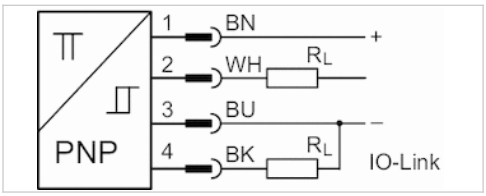

Certificates	RoHS
Ambient temperature min./max.	-20 ... 75 °C
Protection class	IP67
number of switching points	2
Power consumption	15 mA
Min./max. DC operating voltage	12 ... 30 V DC
Repetitive precision max. measuring range	0,1 mT
Hysteresis	1 mT
Switching logic	NO (make contact)
LED status display	Yellow
Display	2 LED
Vibration resistance	10 - 55 Hz, 1 mm
Shock resistance	30 g / 11 ms
Cable length L	0.3 m
Mounting screw	with hexagon socket

Technical data

Part No.	for	Type of contact	Cable length L
R412023459	PRA, SSI, RTC, GPC, MSC, MSN, RCM, CVI	electronic PNP	0.3 m

Part No.	Detection range max.	Voltage drop U at Imax
R412023459	50 mm	≤ 2,2 V

Part No.	Version
R412023459	Wire break protection Short circuit resistance Reverse polarity protection Switch-on pulse suppression

Technical information

The IO-Link device description (IODD) for the ST4-2P proximity sensor is available for download in the Media Centre.

Technical information

Material	
Housing	Polyamide
Cable sheath	Polyurethane

Dimensions

Dimensions

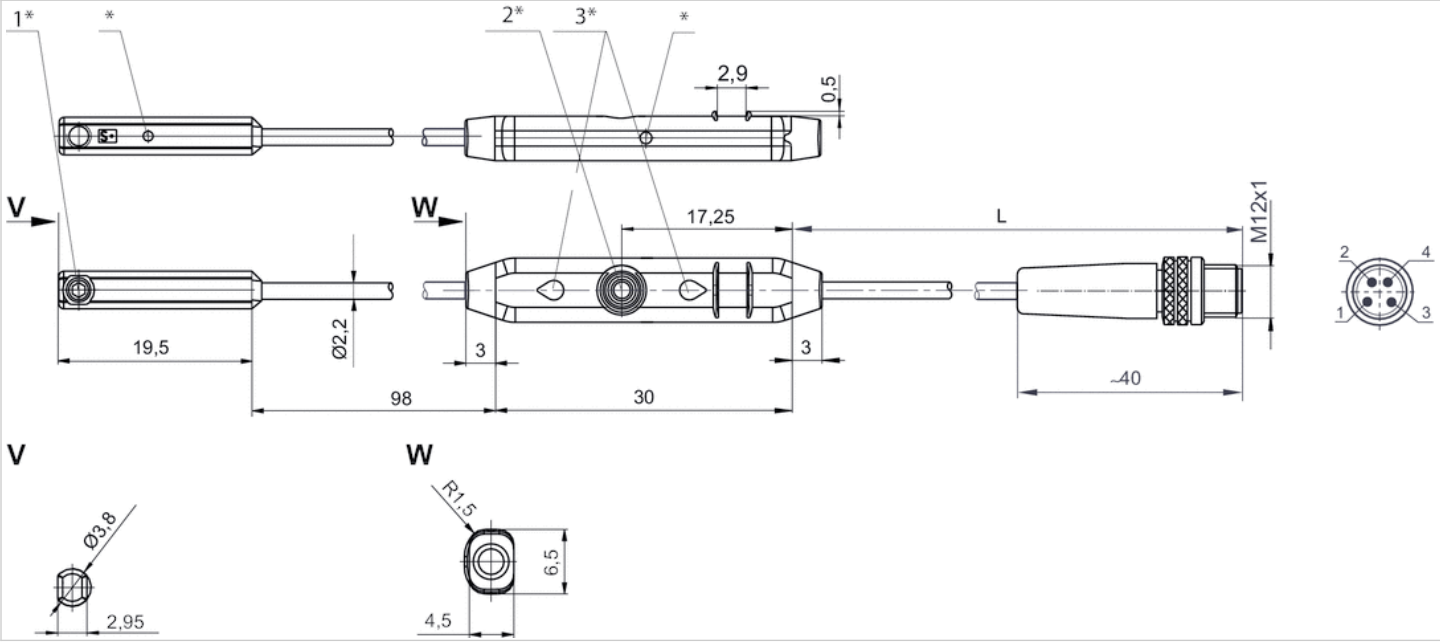

1* = mounting screw 2* = teach button 3* = LED
L = cable length
PIN assignment: 1 = (+), 2 = (OUT), 3 = (-), 4 = (OUT) IO-Link
* Switching point

Pin assignments

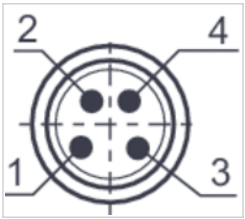

Pin	1	2	3	4
Allocation	(+)	(OUT)	(-)	IO-Link (OUT)

Sensor, Series ST6

- 6 mm T-slot
- with cable
- open cable ends, 2-pin open cable ends, 3-pin
- UL certification
- Reed electronic PNP electronic NPN
- Direct mounting for series PRA, PRE, CCI, KPZ, SSI, GPC, CVI
- Indirect mounting for series TRB, ITS, CCL-IS, MNI, CSL-RD, RPC, ICS-D2, ICM, KHZ, TRR



Ambient temperature min./max.	-30 ... 80 °C
Protection class	IP65, IP67, IP69K
Switching point precision	±0,1 mT
Nominal current, actuated state	30 mA
Quiescent current (without load)	8 mA
Min./max. DC operating voltage	See table below
Min./max. AC operating voltage	See table below
Hysteresis	≥ 0,2 mT
Switching logic	NO (make contact)
LED status display	Yellow
Vibration resistance	10 - 55 Hz, 1 mm
Shock resistance	30 g / 11 ms
Cable length L	3 5 10 m

Technical data

Part No.		for	Type of contact
R412022866		PRA, PRE, CCI, KPZ, SSI, GPC, CVI	Reed
R412027170		PRA, PRE, CCI, KPZ, SSI, GPC, CVI	Reed
R412022869		PRA, PRE, CCI, KPZ, SSI, GPC, CVI	Reed
R412022870		PRA, PRE, CCI, KPZ, SSI, GPC, CVI	Reed
R412022871		PRA, PRE, CCI, KPZ, SSI, GPC, CVI	Reed
R412022853		PRA, PRE, CCI, KPZ, SSI, GPC, CVI	electronic PNP
R412022855		PRA, PRE, CCI, KPZ, SSI, GPC, CVI	electronic PNP
R412022857		PRA, PRE, CCI, KPZ, SSI, GPC, CVI	electronic PNP
R412022849		PRA, PRE, CCI, KPZ, SSI, GPC, CVI	electronic NPN
R412022850		PRA, PRE, CCI, KPZ, SSI, GPC, CVI	electronic NPN

Part No.	Cable length L	Min./max. DC operating voltage	Min./max. AC operating voltage
R412022866	3 m	10 ... 230 V DC	10 ... 230 V AC
R412027170	5 m	10 ... 230 V DC	10 ... 230 V AC
R412022869	3 m	10 ... 30 V DC	10 ... 30 V AC
R412022870	5 m	10 ... 30 V DC	10 ... 30 V AC
R412022871	10 m	10 ... 30 V DC	10 ... 30 V AC
R412022853	3 m	10 ... 30 V DC	-
R412022855	5 m	10 ... 30 V DC	-
R412022857	10 m	10 ... 30 V DC	-
R412022849	3 m	10 ... 30 V DC	-
R412022850	5 m	10 ... 30 V DC	-

Part No.	Voltage drop U at Imax	DC switching current, max.
R412022866	≤ 3,5 V	0.13 A
R412027170	≤ 3,5 V	0.13 A
R412022869	I*Rs	0.3 A
R412022870	≤ 0,1 V	0.3 A
R412022871	I*Rs	0.3 A
R412022853	≤ 2,5 V	0.13 A
R412022855	≤ 2,5 V	0.13 A
R412022857	≤ 2,5 V	0.13 A
R412022849	≤ 2,5 V	0.13 A
R412022850	≤ 2,5 V	0.13 A

Part No.	AC switching current, max.	Switching capacity
R412022866	0.13 A	Reed, 2-pin: max. 10 W
R412027170	0.13 A	Reed, 2-pin: max. 10 W
R412022869	0.5 A	Reed, 3-pin: max. 6 W
R412022870	0.5 A	Reed, 3-pin: max. 6 W
R412022871	0.5 A	Reed, 3-pin: max. 6 W

Part No.	AC switching current, max.	Switching capacity
R412022853	-	-
R412022855	-	-
R412022857	-	-
R412022849	-	-
R412022850	-	-

Part No.	Max. switching frequency	Operating current, not switched
R412022866	400 Hz	-
R412027170	400 Hz	-
R412022869	400 Hz	-
R412022870	400 Hz	-
R412022871	400 Hz	-
R412022853	1000 Hz	8 mA
R412022855	1000 Hz	8 mA
R412022857	1000 Hz	8 mA
R412022849	1000 Hz	8 mA
R412022850	1000 Hz	8 mA

Part No.	Operating current, switched
R412022866	-
R412027170	-
R412022869	-
R412022870	-
R412022871	-
R412022853	30 mA
R412022855	30 mA
R412022857	30 mA
R412022849	30 mA
R412022850	30 mA

Part No.	Version	Fig.	
R412022866	Protected against polarity reversal	Fig. 1	1)
R412027170	Protected against polarity reversal	Fig. 1	1)
R412022869	Protected against polarity reversal	Fig. 2	2)
R412022870	Protected against polarity reversal	Fig. 2	2)
R412022871	Protected against polarity reversal	Fig. 2	2)
R412022853	short circuit resistant Protected against polarity reversal	Fig. 2	3)
R412022855	short circuit resistant Protected against polarity reversal	Fig. 2	3)
R412022857	short circuit resistant Protected against polarity reversal	Fig. 2	3)
R412022849	short circuit resistant Protected against polarity reversal	Fig. 2	3)
R412022850	short circuit resistant Protected against polarity reversal	Fig. 2	3)

1) open cable ends 2-pin The product of operating voltage and continuous current must not exceed the maximum switching capacity.

2) open cable ends 3-pin The product of operating voltage and continuous current must not exceed the maximum switching capacity.

3) open cable ends 3-pin

Technical information

No cULus certification for 230 V variant.

Technical information

Material	
Housing	Polyamide
Cable sheath	Polyurethane
Locking screw	Stainless steel

Dimensions

Fig. 1

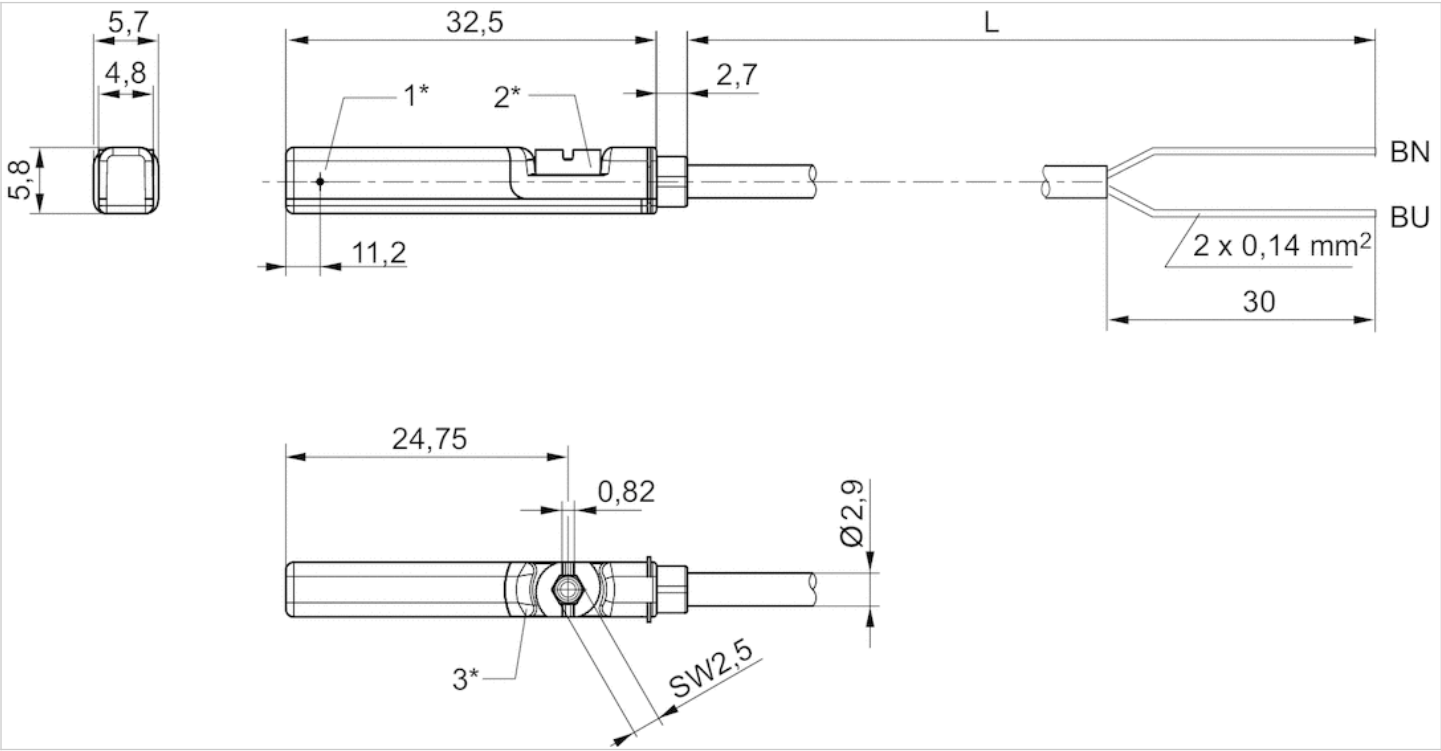

1* = switching point 2* = locking screw 3* = LED window, transparent
L = cable length
BN=brown, BU=blue

Fig. 2

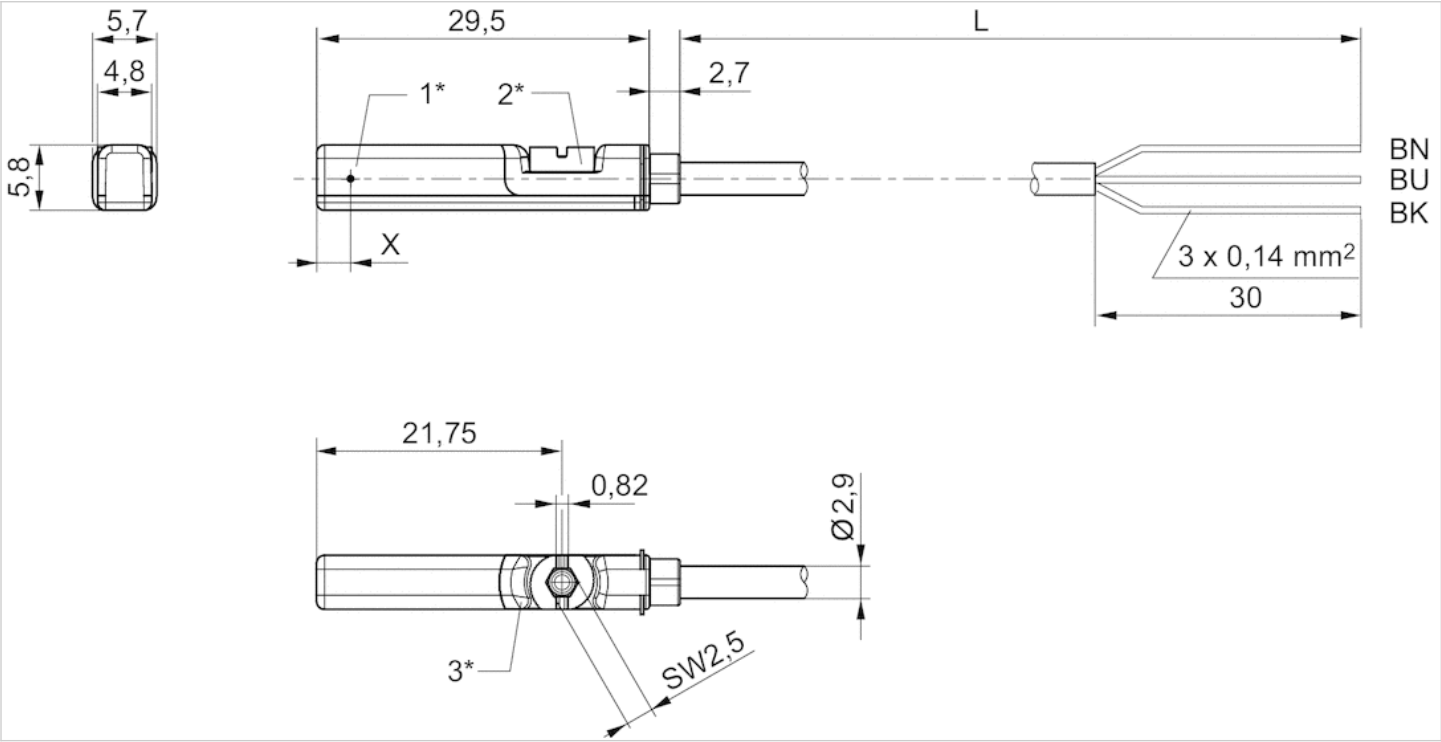

1* = switching point 2* = locking screw 3* = LED window, transparent
L = cable length
BN = brown, BK = black, BU = blue
X = electronic: 11.6 mm

Sensor, Series ST6

- 6 mm T-slot
- with cable
- open cable ends, 3-pin
- ATEX
- UL certification, ATEX
- electronic PNP
- Direct mounting for series PRA, PRE, CCI, KPZ, SSI, GPC, CVI
- Indirect mounting for series TRB, ITS, CCL-IS, MNI, CSL-RD, RPC, ICS-D2, ICM, KHZ, TRR



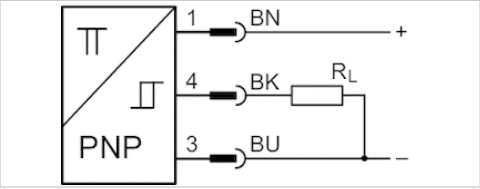

Certificates	ATEX CE declaration of conformity cULus RoHS
ATEX class G	II 3G Ex nA IIC T4 Gc X
ATEX class D	II 3D Ex tc IIIC T135°C Dc X
Ambient temperature min./max.	-20 ... 50 °C
Protection class	IP67
Switching point precision	±0,1 mT
Quiescent current (without load)	10 mA
Min./max. DC operating voltage	10 ... 30 V DC
Switching logic	NO (make contact)
LED status display	Yellow
Vibration resistance	10 - 55 Hz, 1 mm
Shock resistance	30 g / 11 ms
Cable length L	3 5 m

Technical data

Part No.	for	Type of contact	Cable length L
R412022854	PRA, PRE, CCI, KPZ, SSI, GPC, CVI	electronic PNP	3 m
R412022856	PRA, PRE, CCI, KPZ, SSI, GPC, CVI	electronic PNP	5 m

Part No.	Voltage drop U at Imax	DC switching current, max.
R412022854	≤ 2,5 V	0.1 A
R412022856	≤ 2,5 V	0.1 A

Part No.	Max. switching frequency
R412022854	1000 Hz
R412022856	1000 Hz

Part No.	Version
R412022854	short circuit resistant Protected against polarity reversal

Part No.	Version
R412022856	short circuit resistant Protected against polarity reversal

Technical information

Material	
Housing	Polyamide
Cable sheath	Polyurethane
Locking screw	Stainless steel

Dimensions

Fig. 2

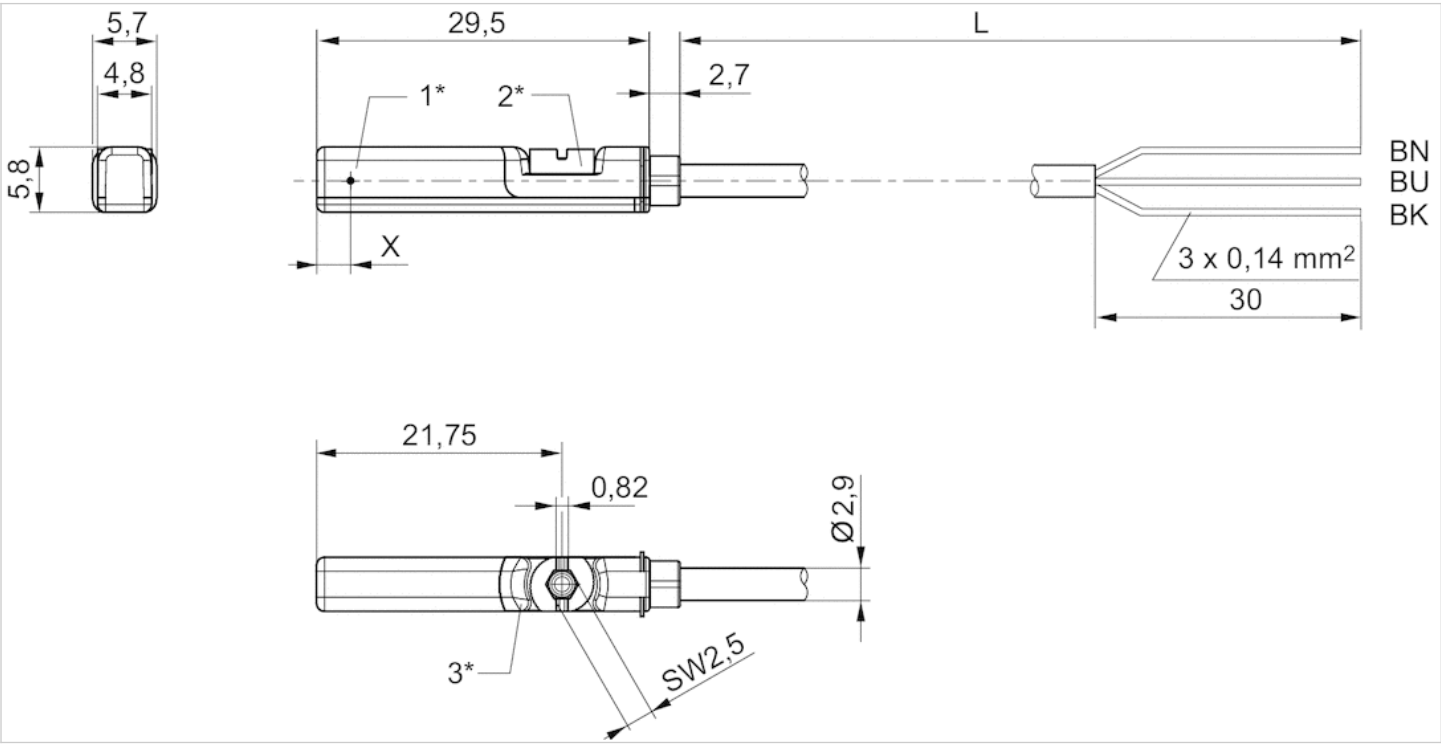

1* = switching point 2* = locking screw 3* = LED window, transparent
L = cable length
BN = brown, BK = black, BU = blue
X = electronic: 11.6 mm

Sensor, Series ST6

- 6 mm T-slot
- with cable
- Plug, M8, 3-pin, with knurled screw
- UL certification
- Reed electronic PNP electronic NPN
- Direct mounting for series PRA, PRE, CCI, KPZ, SSI, GPC, CVI
- Indirect mounting for series TRB, ITS, CCL-IS, MNI, CSL-RD, RPC, ICS-D2, ICM, KHZ, TRR



Certificates	CE declaration of conformity cULus RoHS
Ambient temperature min./max.	-30 ... 80 °C
Protection class	IP65, IP67
Switching point precision	±0,1 mT
Nominal current, actuated state	30 mA
Quiescent current (without load)	8 mA
Min./max. DC operating voltage	10 ... 30 V DC
Min./max. AC operating voltage	See table below
Hysteresis	≥ 0,2 mT
Switching logic	NO (make contact)
Switching capacity	Reed, 3-pin: max. 6 W
LED status display	Yellow
Vibration resistance	10 - 55 Hz, 1 mm
Shock resistance	30 g / 11 ms
Cable length L	0.3 0.5 m

Technical data

Part No.		for	Type of contact
R412022873		PRA, PRE, CCI, KPZ, SSI, GPC, CVI	Reed
R412022875		PRA, PRE, CCI, KPZ, SSI, GPC, CVI	Reed
R412022874		PRA, PRE, CCI, KPZ, SSI, GPC, CVI	Reed
R412022859		PRA, PRE, CCI, KPZ, SSI, GPC, CVI	electronic PNP
R412022862		PRA, PRE, CCI, KPZ, SSI, GPC, CVI	electronic PNP
R412022861		PRA, PRE, CCI, KPZ, SSI, GPC, CVI	electronic PNP
R412022852		PRA, PRE, CCI, KPZ, SSI, GPC, CVI	electronic NPN

Part No.	Cable sheath	Cable length L	Min./max. AC operating voltage
R412022873	Polyurethane	0.3 m	10 ... 30 V AC
R412022875	Polyvinyl chloride	0.3 m	10 ... 30 V AC
R412022874	Polyurethane	0.5 m	10 ... 30 V AC
R412022859	Polyurethane	0.3 m	-
R412022862	Polyvinyl chloride	0.3 m	-
R412022861	Polyurethane	0.5 m	-
R412022852	Polyurethane	0.3 m	-

Part No.	Voltage drop U at Imax	DC switching current, max.
R412022873	I*Rs	0.3 A
R412022875	I*Rs	0.3 A
R412022874	I*Rs	0.3 A
R412022859	≤ 2,5 V	0.13 A
R412022862	≤ 2,5 V	0.13 A
R412022861	≤ 2,5 V	0.13 A
R412022852	≤ 2,5 V	0.13 A

Part No.	AC switching current, max.	Max. switching frequency
R412022873	0.5 A	400 Hz
R412022875	0.5 A	400 Hz
R412022874	0.5 A	400 Hz
R412022859	-	1000 Hz
R412022862	-	1000 Hz
R412022861	-	1000 Hz
R412022852	-	1000 Hz

Part No.	Operating current, not switched	Operating current, switched
R412022873	-	-
R412022875	-	-
R412022874	-	-
R412022859	8 mA	30 mA
R412022862	8 mA	30 mA
R412022861	8 mA	30 mA
R412022852	8 mA	30 mA

Part No.	Version
R412022873	Protected against polarity reversal
R412022875	Protected against polarity reversal
R412022874	Protected against polarity reversal
R412022859	short circuit resistant Protected against polarity reversal
R412022862	short circuit resistant Protected against polarity reversal
R412022861	short circuit resistant Protected against polarity reversal
R412022852	short circuit resistant Protected against polarity reversal

Technical information

Material	
Housing	Polyamide
Cable sheath	Polyurethane Polyvinyl chloride
Locking screw	Stainless steel

Dimensions

Dimensions

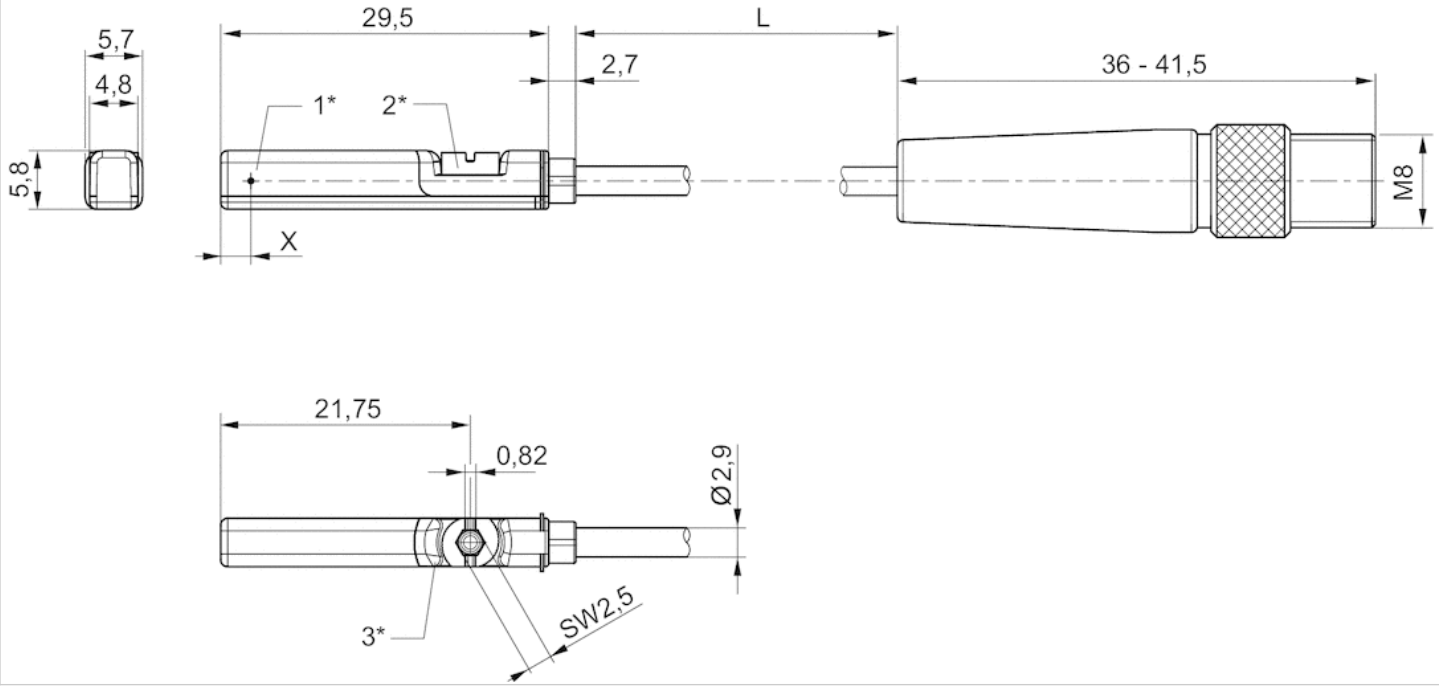

1* = switching point 2* = locking screw 3* = LED window, transparent
L = cable length
X = electronic: 11,6 mm, Reed: 8,3 mm

Pin assignments

Pin assignments

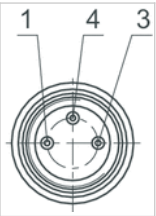

Pin	1	3	4
Allocation	(+)	(-)	(OUT)

Sensor, Series ST6

- 6 mm T-slot
- with cable
- Plug, M8, 3-pin Plug, M8, 2-pin
- UL certification
- Reed electronic PNP electronic NPN
- Direct mounting for series PRA, PRE, CCI, KPZ, SSI, GPC, CVI
- Indirect mounting for series TRB, ITS, CCL-IS, MNI, CSL-RD, RPC, ICS-D2, ICM, KHZ, TRR



Certificates	CE declaration of conformity cULus RoHS
Ambient temperature min./max.	-30 ... 80 °C
Protection class	IP65, IP67
Switching point precision	±0,1 mT
Nominal current, actuated state	30 mA
Quiescent current (without load)	8 mA
Min./max. DC operating voltage	10 ... 30 V DC
Min./max. AC operating voltage	See table below
Hysteresis	≥ 0,2 mT
Switching logic	NO (make contact)
LED status display	Yellow
Vibration resistance	10 - 55 Hz, 1 mm
Shock resistance	30 g / 11 ms
Cable length L	0.3 m

Technical data

Part No.		for	Type of contact
R412022868		PRA, PRE, CCI, KPZ, SSI, GPC, CVI	Reed
R412027172		PRA, PRE, CCI, KPZ, SSI, GPC, CVI	Reed
R412022872		PRA, PRE, CCI, KPZ, SSI, GPC, CVI	Reed
R412022858		PRA, PRE, CCI, KPZ, SSI, GPC, CVI	electronic PNP
R412022851		PRA, PRE, CCI, KPZ, SSI, GPC, CVI	electronic NPN

Part No.	Cable length L	Min./max. AC operating voltage	Voltage drop U at Imax
R412022868	0.3 m	10 ... 30 V AC	≤ 3,5 V
R412027172	0.3 m	10 ... 30 V AC	≤ 3,5 V
R412022872	0.3 m	10 ... 30 V AC	≤ 0,1 V
R412022858	0.3 m	-	≤ 2,5 V
R412022851	0.3 m	-	≤ 2,5 V

Part No.	DC switching current, max.	AC switching current, max.
R412022868	0.13 A	0.13 A
R412027172	0.13 A	0.13 A
R412022872	0.3 A	0.5 A
R412022858	0.13 A	-

Part No.	DC switching current, max.	AC switching current, max.
R412022851	0.13 A	-

Part No.	Switching capacity	Max. switching frequency
R412022868	Reed, 2-pin: max. 10 W	400 Hz
R412027172	Reed, 2-pin: max. 10 W	400 Hz
R412022872	Reed, 3-pin: max. 6 W	400 Hz
R412022858	-	1000 Hz
R412022851	-	1000 Hz

Part No.	Operating current, not switched	Operating current, switched
R412022868	-	-
R412027172	-	-
R412022872	-	-
R412022858	8 mA	30 mA
R412022851	8 mA	30 mA

Part No.	Version	
R412022868	Protected against polarity reversal	1)
R412027172	Protected against polarity reversal	1)
R412022872	Protected against polarity reversal	1)
R412022858	short circuit resistant Protected against polarity reversal	-
R412022851	short circuit resistant Protected against polarity reversal	-

1) The product of operating voltage and continuous current must not exceed the maximum switching capacity.

Technical information

Material	
Housing	Polyamide
Cable sheath	Polyurethane
Locking screw	Stainless steel

Dimensions

Dimensions

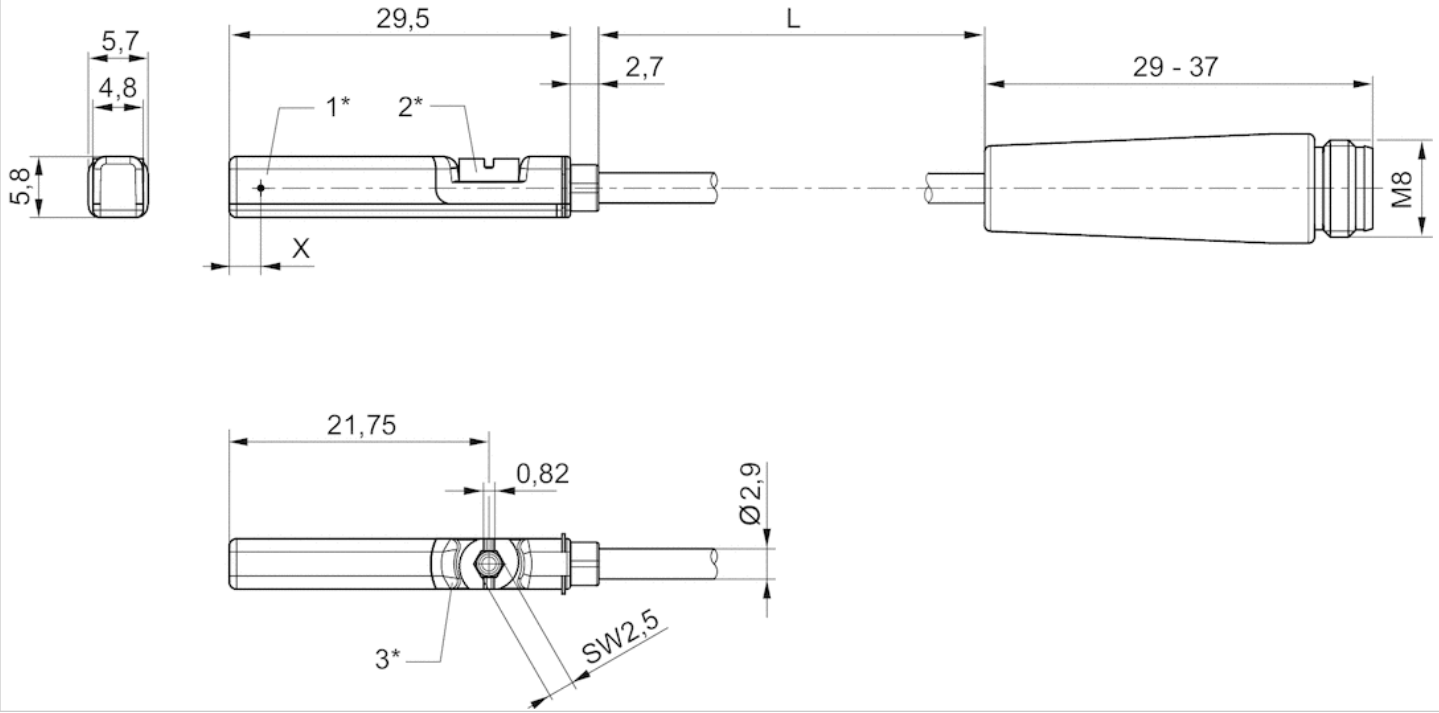

1* = switching point 2* = locking screw 3* = LED window, transparent
L = cable length
X = electronic: 11,6 mm, Reed: 8,3 mm

Sensor, Series ST6

- 6 mm T-slot
- with cable
- Plug, M8, 3-pin, with knurled screw
- ATEX
- UL certification, ATEX
- electronic PNP
- Direct mounting for series PRA, PRE, CCI, KPZ, SSI, GPC, CVI
- Indirect mounting for series TRB, ITS, CCL-IS, MNI, CSL-RD, RPC, ICS-D2, ICM, KHZ, TRR



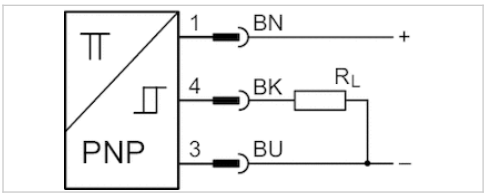

Certificates	ATEX CE declaration of conformity cULus RoHS
ATEX class G	II 3G Ex nA IIC T4 Gc X
ATEX class D	II 3D Ex tc IIIC T135°C Dc X
Ambient temperature min./max.	-20 ... 50 °C
Protection class	IP65, IP67
Switching point precision	±0,1 mT
Quiescent current (without load)	10 mA
Min./max. DC operating voltage	10 ... 30 V DC
Switching logic	NO (make contact)
LED status display	Yellow Yellow
Vibration resistance	10 - 55 Hz, 1 mm
Shock resistance	30 g / 11 ms
Cable length L	0.3 m

Technical data

Part No.	for	Type of contact	Cable length L
R412022860	PRA, PRE, CCI, KPZ, SSI, GPC, CVI	electronic PNP	0.3 m

Part No.	Voltage drop U at Imax	DC switching current, max.
R412022860	≤ 2,5 V	0.1 A

Part No.	Max. switching frequency
R412022860	1000 Hz

Part No.	Version
R412022860	short circuit resistant Protected against polarity reversal

Technical information

Material	
Housing	Polyamide
Cable sheath	Polyurethane
Locking screw	Stainless steel

Dimensions

Dimensions

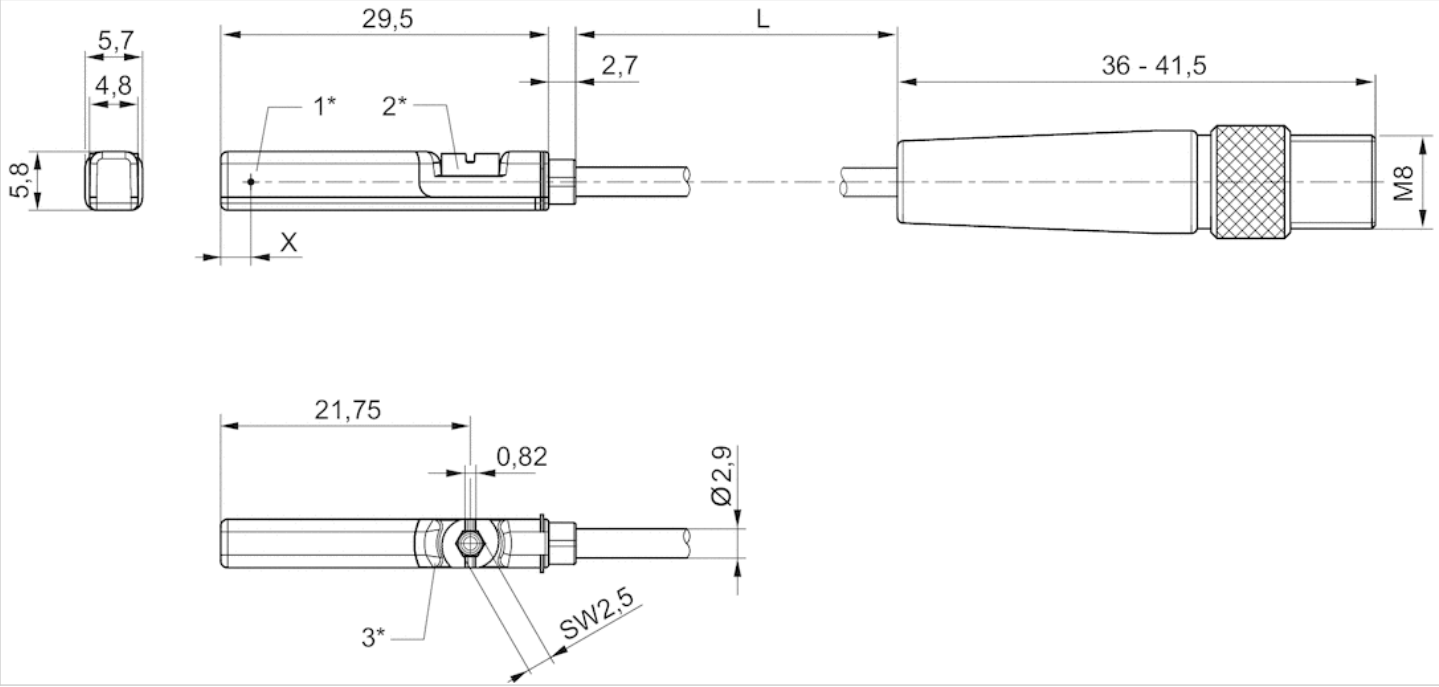

1* = switching point 2* = locking screw 3* = LED window, transparent
L = cable length
X = electronic: 11,6 mm, Reed: 8,3 mm

Pin assignments

Pin assignments

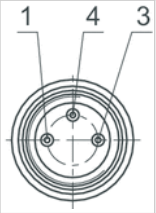

Pin	1	3	4
Allocation	(+)	(-)	(OUT)

Sensor, Series ST6

- 6 mm T-slot
- with cable
- Plug, M12, 2-pin, with knurled screw Plug, M12, 4-pin, with knurled screw
- UL certification
- Reed electronic PNP
- Direct mounting for series PRA, PRE, CCI, KPZ, SSI, GPC, CVI
- Indirect mounting for series TRB, ITS, CCL-IS, MNI, CSL-RD, RPC, ICS-D2, ICM, KHZ, TRR



Certificates	CE declaration of conformity cULus RoHS
Ambient temperature min./max.	-30 ... 80 °C
Protection class	See table below
Switching point precision	±0,1 mT
Nominal current, actuated state	30 mA
Quiescent current (without load)	8 mA
Min./max. DC operating voltage	10 ... 30 V DC
Min./max. AC operating voltage	See table below
Hysteresis	≥ 0,2 mT
Switching logic	NO (make contact)
LED status display	Yellow
Vibration resistance	10 - 55 Hz, 1 mm
Shock resistance	30 g / 11 ms
Cable length L	0.3 0.1 3 5 m

Technical data

Part No.		for	Type of contact
R412027171		PRA, PRE, CCI, KPZ, SSI, GPC, CVI	Reed
R412022876		PRA, PRE, CCI, KPZ, SSI, GPC, CVI	Reed
R412022879		PRA, PRE, CCI, KPZ, SSI, GPC, CVI	electronic PNP
R412022863		PRA, PRE, CCI, KPZ, SSI, GPC, CVI	electronic PNP
R412022877		PRA, PRE, CCI, KPZ, SSI, GPC, CVI	electronic PNP
R412022878		PRA, PRE, CCI, KPZ, SSI, GPC, CVI	electronic PNP

Part No.	Cable length L	Min./max. AC operating voltage	Voltage drop U at Imax
R412027171	0.3 m	10 ... 30 V AC	≤ 3,5 V
R412022876	0.3 m	10 ... 30 V AC	≤ 0,1 V
R412022879	0.1 m	-	≤ 2,5 V
R412022863	0.3 m	-	≤ 2,5 V
R412022877	3 m	-	≤ 2,5 V
R412022878	5 m	-	≤ 2,5 V

Part No.	DC switching current, max.	AC switching current, max.
R412027171	0.13 A	0.13 A
R412022876	0.3 A	0.5 A

Part No.	DC switching current, max.	AC switching current, max.
R412022879	0.13 A	-
R412022863	0.13 A	-
R412022877	0.13 A	-
R412022878	0.13 A	-

Part No.	Switching capacity	Max. switching frequency
R412027171	Reed, 2-pin: max. 10 W	400 Hz
R412022876	Reed, 3-pin: max. 6 W	400 Hz
R412022879	-	1000 Hz
R412022863	-	1000 Hz
R412022877	-	1000 Hz
R412022878	-	1000 Hz

Part No.	Operating current, not switched	Operating current, switched	Protection class
R412027171	-	-	IP65, IP67
R412022876	-	-	IP65, IP67
R412022879	8 mA	30 mA	IP65, IP67
R412022863	8 mA	30 mA	IP65, IP67, IP69K
R412022877	8 mA	30 mA	IP65, IP67
R412022878	8 mA	30 mA	IP65, IP67

Part No.	Version	
R412027171	Protected against polarity reversal	1)
R412022876	Protected against polarity reversal	1)
R412022879	short circuit resistant Protected against polarity reversal	-
R412022863	short circuit resistant Protected against polarity reversal	-
R412022877	short circuit resistant Protected against polarity reversal	-
R412022878	short circuit resistant Protected against polarity reversal	-

1) The product of operating voltage and continuous current must not exceed the maximum switching capacity.

Technical information

Material	
Housing	Polyamide
Cable sheath	Polyurethane
Locking screw	Stainless steel

Dimensions

Dimensions

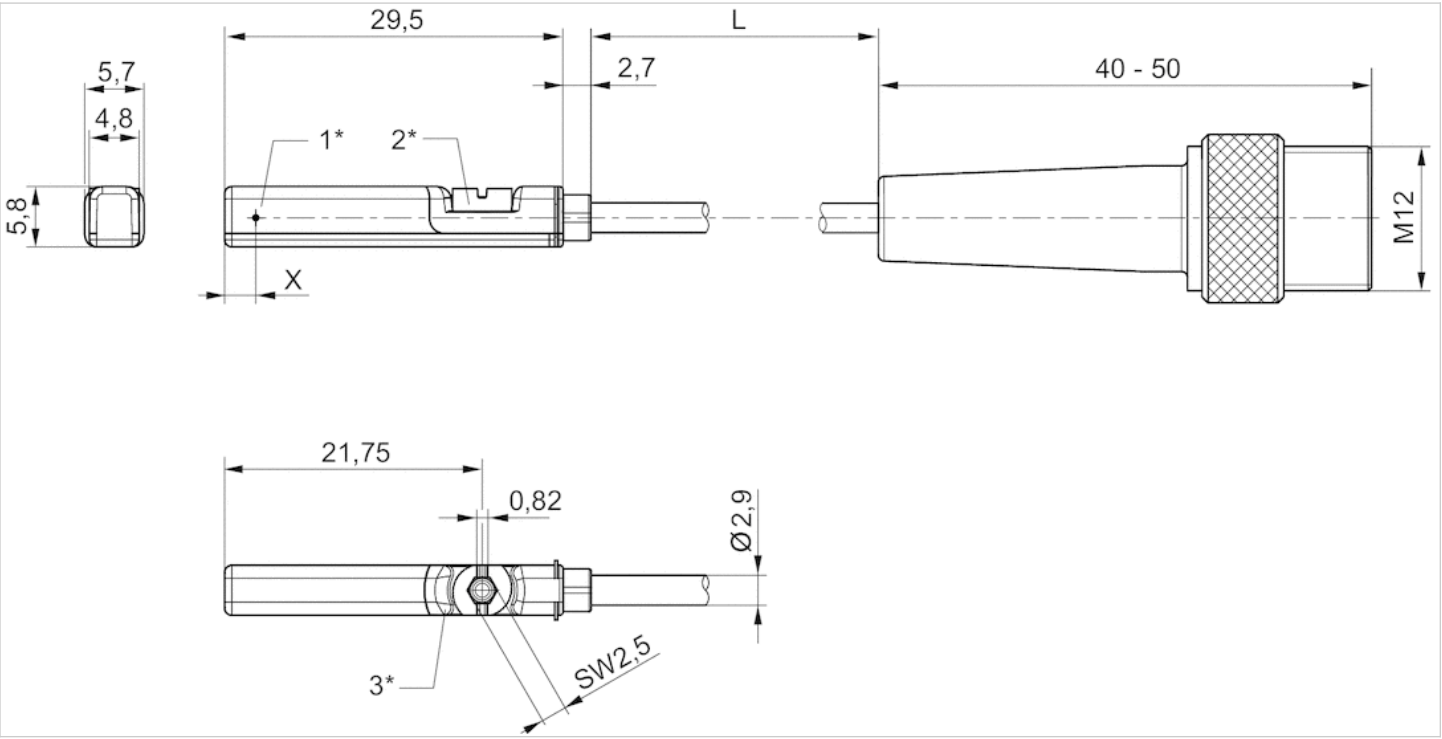

1* = switching point 2* = locking screw 3* = LED window, transparent
L = cable length
X = PNP: 11,6 mm, reed: 8,3 mm

Sensor, Series ST6

- 6 mm T-slot
- with cable
- Plug, M12, 3-pin, with knurled screw
- ATEX
- UL certification, ATEX
- electronic PNP
- Direct mounting for series PRA, PRE, CCI, KPZ, SSI, GPC, CVI
- Indirect mounting for series TRB, ITS, CCL-IS, MNI, CSL-RD, RPC, ICS-D2, ICM, KHZ, TRR



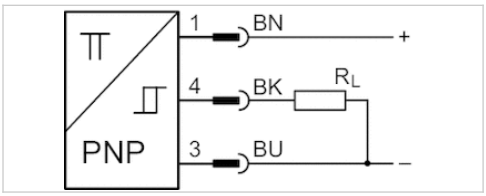

Certificates	ATEX CE declaration of conformity cULus RoHS
ATEX class G	II 3G Ex nA IIC T4 Gc X
ATEX class D	II 3D Ex tc IIIC T135°C Dc X
Ambient temperature min./max.	-20 ... 50 °C
Protection class	IP67
Switching point precision	±0,1 mT
Quiescent current (without load)	10 mA
Min./max. DC operating voltage	10 ... 30 V DC
Switching logic	NO (make contact)
LED status display	Yellow Yellow
Vibration resistance	10 - 55 Hz, 1 mm
Shock resistance	30 g / 11 ms
Cable length L	0.3 m

Technical data

Part No.	for	Type of contact	Cable length L
R412022864	PRA, PRE, CCI, KPZ, SSI, GPC, CVI	electronic PNP	0.3 m

Part No.	Voltage drop U at Imax	DC switching current, max.
R412022864	≤ 2,5 V	0.1 A

Part No.	Max. switching frequency
R412022864	1000 Hz

Part No.	Version
R412022864	short circuit resistant Protected against polarity reversal

Technical information

Material	
Housing	Polyamide
Cable sheath	Polyurethane
Locking screw	Stainless steel

Dimensions

Dimensions

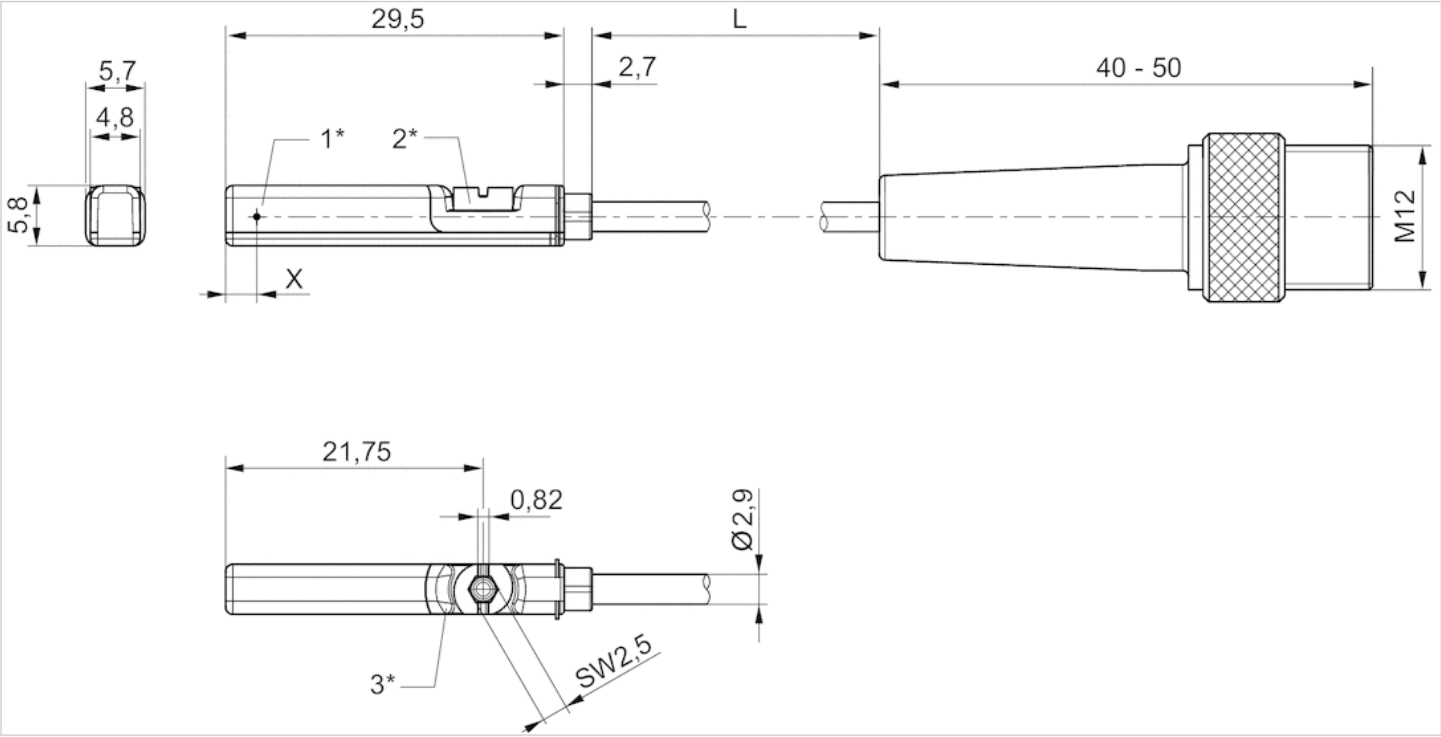

1* = switching point 2* = locking screw 3* = LED window, transparent
L = cable length
X = PNP: 11,6 mm, reed: 8,3 mm

Pin assignments

Pin assignments

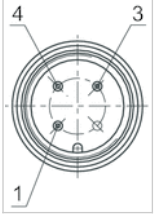

Pin	1	3	4
Allocation	(+)	(-)	(OUT)

Sensor, Series ST6-HT

- 6 mm T-slot
- with cable
- open cable ends, 2-pin
- Heat resistant
- UL certification
- Reed
- Direct mounting for series PRA, PRE, CCI, KPZ
- Indirect mounting for series TRB, ITS, CCL-IS, MNI, CSL-RD, RPC



Certificates	CE declaration of conformity RoHS
Ambient temperature min./max.	-20 ... 120 °C
Protection class	IP65, IP67
Switching point precision	±0,1 mT
Min./max. DC operating voltage	0 ... 30 V DC
Min./max. AC operating voltage	0 ... 30 V AC
Switching logic	NO (make contact)
Switching capacity	Reed, 2-pin: max. 10 W
Vibration resistance	10 - 55 Hz, 1 mm
Shock resistance	30 g / 11 ms
Cable length L	3 10 m

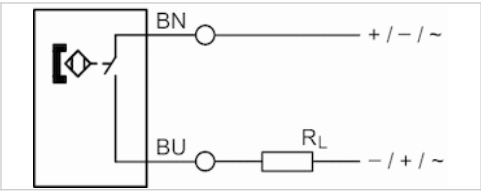

Technical data

Part No.	for	Type of contact	Cable length L	Voltage drop U at Imax
R412022865	PRA, PRE, CCI, KPZ	Reed	3 m	≤ 3,5 V
R412022867	PRA, PRE, CCI, KPZ	Reed	10 m	≤ 3,5 V

Part No.	DC switching current, max.	AC switching current, max.
R412022865	0.13 A	0.13 A
R412022867	0.13 A	0.13 A

Part No.	Max. switching frequency	Version
R412022865	400 Hz	Protected against polarity reversal
R412022867	400 Hz	Protected against polarity reversal

Part No.	Temperature resistance
R412022865	Heat resistant

Part No.	Temperature resistance
R412022867	Heat resistant

Technical information

Material	
Housing	Polyamide
Cable sheath	Polyurethane
Locking screw	Stainless steel

Dimensions

Dimensions

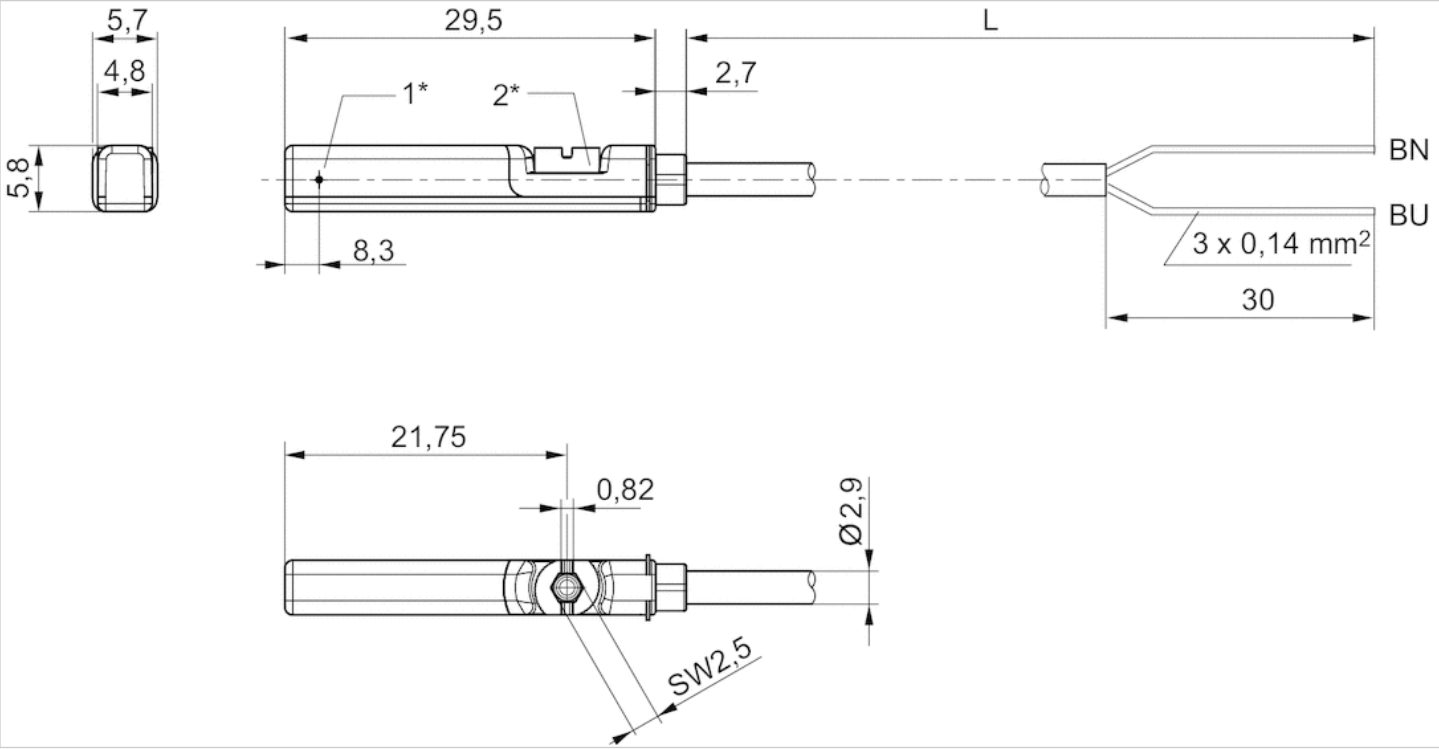

1* = switching point 2* = locking screw
L = cable length
BN=brown, BU=blue

Sensor, Series IN1

- for locking unit, series LU6



Standardization	DIN EN 60947-5-2
Certificates	cULus
Ambient temperature min./max.	-20 ... 65 °C
Protection class	IP67
Hysteresis	5 - 15%, adjustable
Temperature drift	± 10 %
Residual ripple	≤ 10 %
Reproducibility	≤ 2 %
Switching logic	NO (make contact)
LED status display	Yellow

Technical data

Part No.	Operational voltage	Switching distance max.	Power consumption	Continuous current
R412010426	10 ... 30 V DC	2 mm	10 mA	0.2 A

Part No.	Short circuit resistance
R412010426	short circuit resistant Protected against polarity reversal

Technical information

Flush installation
Switching states:
1. Pressure applied to locking unit, clamping pliers are open, sensor does not emit a signal (normally open)
2. No pressure applied to locking unit, clamping pliers are closed, sensor emits a signal (feedback that LU6 is clamping)

Technical information

Material	
Housing	Brass

Dimensions

Dimensions

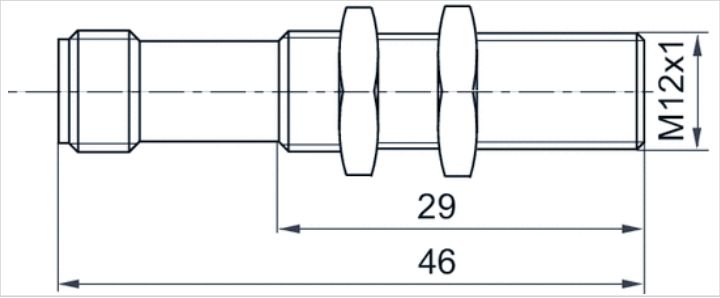

Pin assignments

Pin assignments, M12x1

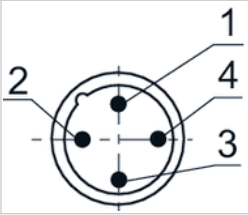

Pin	1	2	3
Allocation	Pin 1: operational voltage + UB	not assigned	m = mass

4
switch output Out

Sensors, Series SM6

- 6 mm groove
- with cable
- without wire end ferrule, tin-plated, 4-pin
- with distance measuring sensor, measurement range 32 ... 256 mm
- Analog
- Direct mounting for series PRA, PRE, CCI, KPZ, SSI, GPC, CVI
- Indirect mounting for series TRB, ITS, 167, MNI, ICM, TRR



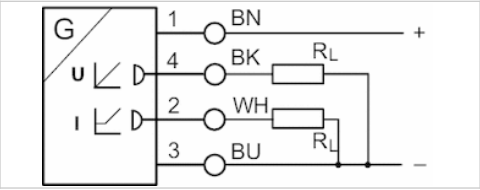

Certificates	cULus
Ambient temperature min./max.	-20 ... 70 °C
Protection class	IP67
Output signal	0 - 10 V DC, 4 - 20 mA
Quiescent current (without load)	25 mA
Maximum load (analog current output)	500 Ω
Residual ripple	≤ 10 %
sampling interval	1 ms
Resolution max. measuring range	0,05 mm
Repetitive precision max. measuring range	0.1 mm
Linearity deviation	0,3 mm
Sampling speed	3 m/s
Display	LED
LED status display	Yellow
Vibration resistance	10 - 55 Hz, 1 mm
Shock resistance	30 g / 11 ms
Cable length L	2 m

Technical data

Part No.	for	Type of contact	Cable length L
R412010141	PRA, PRE, CCI, KPZ, SSI, GPC, CVI	Analog	2 m
R412010143	PRA, PRE, CCI, KPZ, SSI, GPC, CVI	Analog	2 m
R412010262	PRA, PRE, CCI, KPZ, SSI, GPC, CVI	Analog	2 m
R412010264	PRA, PRE, CCI, KPZ, SSI, GPC, CVI	Analog	2 m
R412010411	PRA, PRE, CCI, KPZ, SSI, GPC, CVI	Analog	2 m
R412010413	PRA, PRE, CCI, KPZ, SSI, GPC, CVI	Analog	2 m
R412010415	PRA, PRE, CCI, KPZ, SSI, GPC, CVI	Analog	2 m
R412010417	PRA, PRE, CCI, KPZ, SSI, GPC, CVI	Analog	2 m

Part No.	max. measuring range	Overall length Sensor A
R412010141	32 mm	45 mm
R412010143	64 mm	77 mm
R412010262	96 mm	109 mm
R412010264	128 mm	141 mm
R412010411	160 mm	173 mm
R412010413	192 mm	205 mm

Part No.	max. measuring range	Overall length Sensor A
R412010415	224 mm	237 mm
R412010417	256 mm	269 mm

Part No.	Version
R412010141	short circuit resistant Protected against polarity reversal Overload protection
R412010143	short circuit resistant Protected against polarity reversal Overload protection
R412010262	short circuit resistant Protected against polarity reversal Overload protection
R412010264	short circuit resistant Protected against polarity reversal Overload protection
R412010411	short circuit resistant Protected against polarity reversal Overload protection
R412010413	short circuit resistant Protected against polarity reversal Overload protection
R412010415	short circuit resistant Protected against polarity reversal Overload protection
R412010417	short circuit resistant Protected against polarity reversal Overload protection

Technical information

Material	
Housing	Polyamide fiber-glass reinforced
Cable sheath	Polyurethane

Dimensions

Dimensions

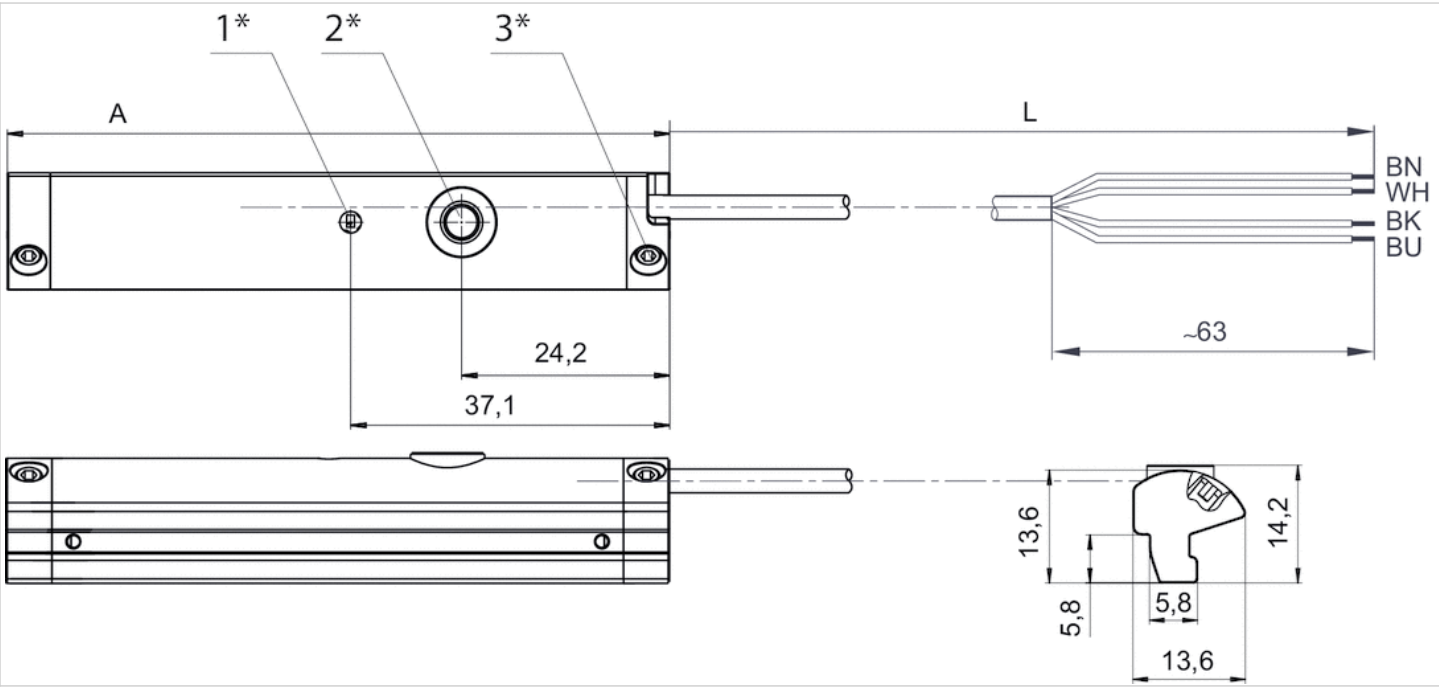

1* = LED 2* = teach button 3* = threaded pin M3x11
L = cable length
(1) BN=brown
(2) WH=white
(3) BU=blue

(4) BK=black
A = sensor length

Sensors, Series SM6

- 6 mm groove
- with cable
- Plug, M8x1, 4-pin, with knurled screw
- with distance measuring sensor, measurement range 32 ... 256 mm
- Analog
- Direct mounting for series PRA, PRE, CCI, KPZ, SSI, GPC, CVI
- Indirect mounting for series TRB, ITS, 167, MNI, ICM, TRR



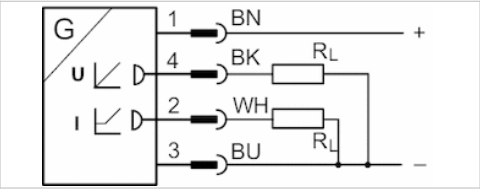

Certificates	cULus
Ambient temperature min./max.	-20 ... 70 °C
Protection class	IP67
Output signal	0 - 10 V DC, 4 - 20 mA
Quiescent current (without load)	25 mA
Min./max. DC operating voltage	15 ... 30 V DC
sampling interval	1 ms
Resolution max. measuring range	0,05 mm
Repetitive precision max. measuring range	0.1 mm
Linearity deviation	0,3 mm
Sampling speed	3 m/s
Display	LED
LED status display	Yellow
Vibration resistance	10 - 55 Hz, 1 mm
Shock resistance	30 g / 11 ms
Cable length L	0.3 m

Technical data

Part No.	for	Type of contact	Cable length L
R412010142	PRA, PRE, CCI, KPZ, SSI, GPC, CVI	Analog	0.3 m
R412010144	PRA, PRE, CCI, KPZ, SSI, GPC, CVI	Analog	0.3 m
R412010263	PRA, PRE, CCI, KPZ, SSI, GPC, CVI	Analog	0.3 m
R412010265	PRA, PRE, CCI, KPZ, SSI, GPC, CVI	Analog	0.3 m
R412010410	PRA, PRE, CCI, KPZ, SSI, GPC, CVI	Analog	0.3 m
R412010412	PRA, PRE, CCI, KPZ, SSI, GPC, CVI	Analog	0.3 m
R412010414	PRA, PRE, CCI, KPZ, SSI, GPC, CVI	Analog	0.3 m
R412010416	PRA, PRE, CCI, KPZ, SSI, GPC, CVI	Analog	0.3 m

Part No.	max. measuring range	Overall length Sensor A
R412010142	32 mm	45 mm
R412010144	64 mm	77 mm
R412010263	96 mm	109 mm
R412010265	128 mm	141 mm
R412010410	160 mm	173 mm
R412010412	192 mm	205 mm

Part No.	max. measuring range	Overall length Sensor A
R412010414	224 mm	237 mm
R412010416	256 mm	269 mm

Part No.	Version
R412010142	short circuit resistant Protected against polarity reversal Overload protection
R412010144	short circuit resistant Protected against polarity reversal Overload protection
R412010263	short circuit resistant Protected against polarity reversal Overload protection
R412010265	short circuit resistant Protected against polarity reversal Overload protection
R412010410	short circuit resistant Protected against polarity reversal Overload protection
R412010412	short circuit resistant Protected against polarity reversal Overload protection
R412010414	short circuit resistant Protected against polarity reversal Overload protection
R412010416	short circuit resistant Protected against polarity reversal Overload protection

Technical information

Material	
Housing	Polyamide fiber-glass reinforced
Cable sheath	Polyurethane

Dimensions

Dimensions

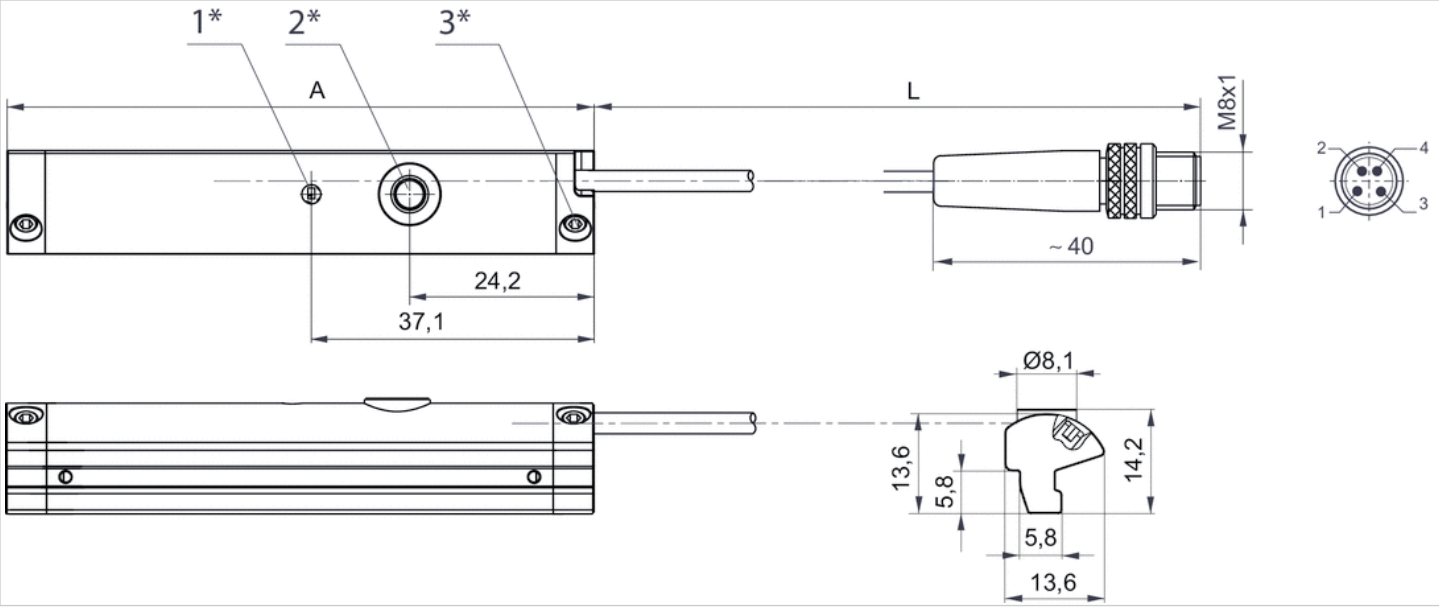

1* = LED 2* = teach button 3* = threaded pin M3x11
L = cable length
Pin assignment: 1 = (+), 2 = (OUT 1) 3 = (GND), 4 = (OUT 2), EN 60947-5-7
A = sensor length

Sensors, Series SM6-AL

- with cable
- Plug, M8x1, 4-pin
- with distance measuring sensor, measurement range 107 - 1007 mm
- IO-Link
- Analog
- Indirect mounting for series PRA, ITS, RTC, CVI



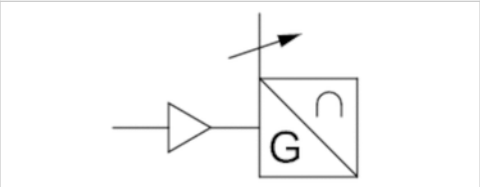

Certificates	cULus
Ambient temperature min./max.	-20 ... 70 °C
Protection class	IP65, IP67
Output signal	0 - 10 V DC, 4 - 20 mA
Quiescent current (without load)	35 mA
Current signal	4 ... 20 mA
Maximum load (analog current output)	500 Ω
Residual ripple	≤ 10 %
sampling interval	1,15 ms
Resolution max. measuring range	typ. 0,03 % FSR
Repetitive precision max. measuring range	typ. 0,06 % FSR
Linearity deviation	0,5 mm
Sampling speed Partial stroke	1,5 m/s
Sampling speed Full stroke	3 m/s
Display	2 LED
Vibration resistance	10 - 55 Hz, 1 mm
Shock resistance	30 g / 11 ms
Cable length L	0.3 m

Technical data

Part No.	Type of contact	Cable length L	max. measuring range	Overall length Sensor A
R412010880	Analog	0.3 m	107 mm	109 mm
R412010881	Analog	0.3 m	143 mm	145 mm
R412010882	Analog	0.3 m	179 mm	181 mm
R412010883	Analog	0.3 m	215 mm	217 mm
R412010884	Analog	0.3 m	251 mm	253 mm
R412010885	Analog	0.3 m	287 mm	289 mm
R412010886	Analog	0.3 m	323 mm	325 mm
R412010887	Analog	0.3 m	359 mm	361 mm
R412010888	Analog	0.3 m	395 mm	397 mm
R412010889	Analog	0.3 m	431 mm	433 mm
R412010890	Analog	0.3 m	467 mm	469 mm
R412010891	Analog	0.3 m	503 mm	505 mm
R412010892	Analog	0.3 m	539 mm	541 mm
R412010893	Analog	0.3 m	575 mm	577 mm
R412010894	Analog	0.3 m	611 mm	613 mm
R412010895	Analog	0.3 m	647 mm	649 mm
R412010896	Analog	0.3 m	683 mm	685 mm

Part No.	Type of contact	Cable length L	max. measuring range	Overall length Sensor A
R412010897	Analog	0.3 m	719 mm	721 mm
R412010898	Analog	0.3 m	755 mm	757 mm
R412010899	Analog	0.3 m	791 mm	793 mm
R412010900	Analog	0.3 m	827 mm	829 mm
R412010901	Analog	0.3 m	863 mm	865 mm
R412010902	Analog	0.3 m	899 mm	901 mm
R412010903	Analog	0.3 m	935 mm	937 mm
R412010904	Analog	0.3 m	971 mm	973 mm
R412010905	Analog	0.3 m	1007 mm	1009 mm

Part No.	Incl. number of sensor clamp pairs	Current signal
R412010880	2 piece	4 ... 20 mA
R412010881	2 piece	4 ... 20 mA
R412010882	2 piece	4 ... 20 mA
R412010883	2 piece	4 ... 20 mA
R412010884	2 piece	4 ... 20 mA
R412010885	3 piece	4 ... 20 mA
R412010886	3 piece	4 ... 20 mA
R412010887	3 piece	4 ... 20 mA
R412010888	3 piece	4 ... 20 mA
R412010889	3 piece	4 ... 20 mA
R412010890	4 piece	4 ... 20 mA
R412010891	4 piece	4 ... 20 mA
R412010892	4 piece	4 ... 20 mA
R412010893	4 piece	4 ... 20 mA
R412010894	4 piece	4 ... 20 mA
R412010895	4 piece	4 ... 20 mA
R412010896	5 piece	4 ... 20 mA
R412010897	5 piece	4 ... 20 mA
R412010898	5 piece	4 ... 20 mA
R412010899	5 piece	4 ... 20 mA
R412010900	6 piece	4 ... 20 mA
R412010901	6 piece	4 ... 20 mA
R412010902	6 piece	4 ... 20 mA
R412010903	6 piece	4 ... 20 mA
R412010904	6 piece	4 ... 20 mA
R412010905	6 piece	4 ... 20 mA

Part No.	Version
R412010880	short circuit resistant Protected against polarity reversal Overload protection
R412010881	short circuit resistant Protected against polarity reversal Overload protection
R412010882	short circuit resistant Protected against polarity reversal Overload protection
R412010883	short circuit resistant Protected against polarity reversal Overload protection
R412010884	short circuit resistant Protected against polarity reversal Overload protection
R412010885	short circuit resistant Protected against polarity reversal Overload protection

Part No.	Version
R412010886	short circuit resistant Protected against polarity reversal Overload protection
R412010887	short circuit resistant Protected against polarity reversal Overload protection
R412010888	short circuit resistant Protected against polarity reversal Overload protection
R412010889	short circuit resistant Protected against polarity reversal Overload protection
R412010890	short circuit resistant Protected against polarity reversal Overload protection
R412010891	short circuit resistant Protected against polarity reversal Overload protection
R412010892	short circuit resistant Protected against polarity reversal Overload protection
R412010893	short circuit resistant Protected against polarity reversal Overload protection
R412010894	short circuit resistant Protected against polarity reversal Overload protection
R412010895	short circuit resistant Protected against polarity reversal Overload protection
R412010896	short circuit resistant Protected against polarity reversal Overload protection
R412010897	short circuit resistant Protected against polarity reversal Overload protection
R412010898	short circuit resistant Protected against polarity reversal Overload protection
R412010899	short circuit resistant Protected against polarity reversal Overload protection
R412010900	short circuit resistant Protected against polarity reversal Overload protection
R412010901	short circuit resistant Protected against polarity reversal Overload protection
R412010902	short circuit resistant Protected against polarity reversal Overload protection
R412010903	short circuit resistant Protected against polarity reversal Overload protection
R412010904	short circuit resistant Protected against polarity reversal Overload protection
R412010905	short circuit resistant Protected against polarity reversal Overload protection

Technical information

Holders for cylinder series PRA are included in the scope of delivery. For cylinder series ITS, please order the appropriate holders separately.
FSR: Full Scale Range, max. measurement range
The IO-Link device description (IODD) for the SM6-AL distance measuring sensor is available for download in the Media Centre.

Technical information

Material	
Housing	Aluminum
Cable sheath	Polyurethane
End caps	Polyamide

Dimensions

Dimensions

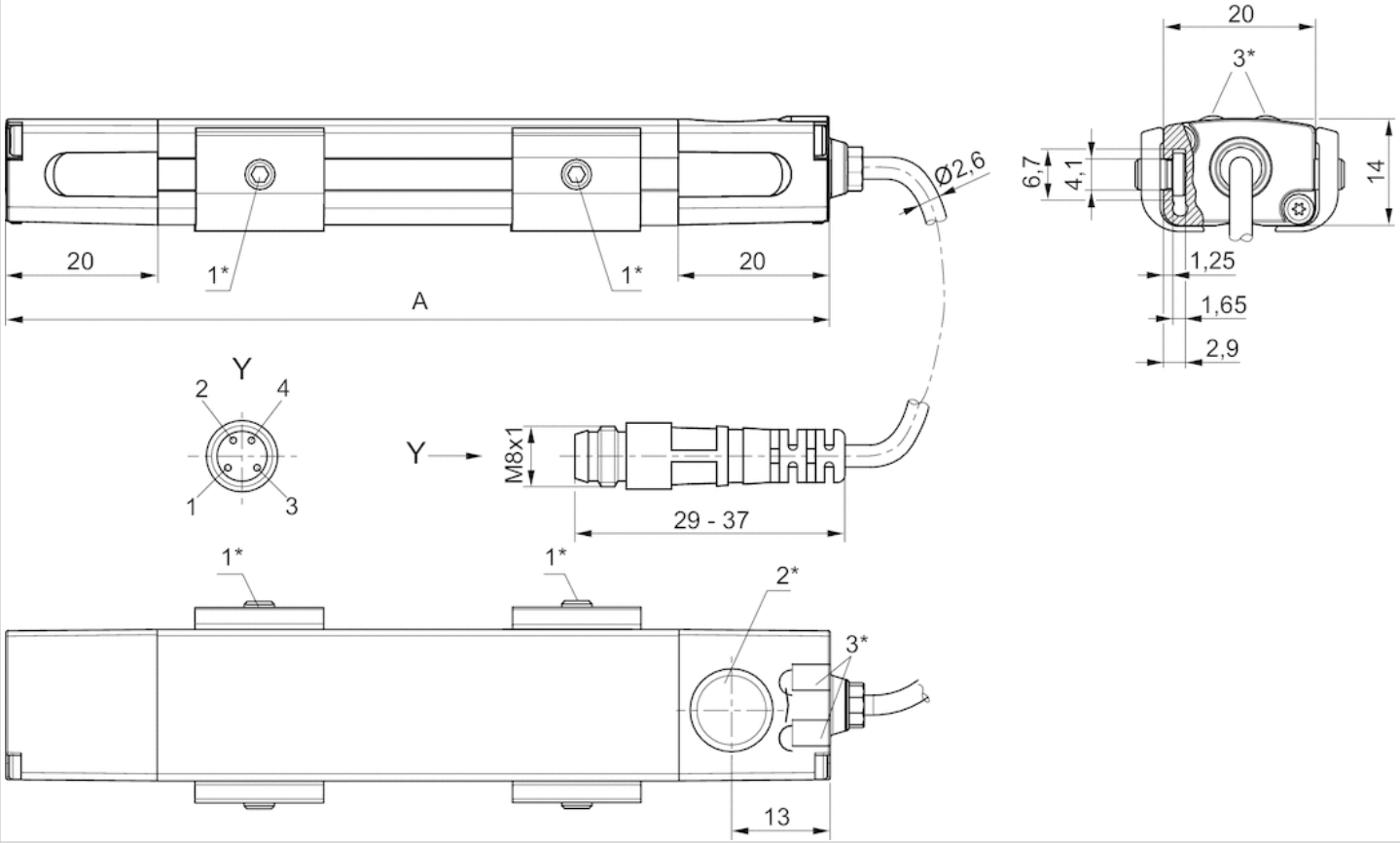

1* = threaded pin M3x11 2* = teach area 3* = LED
A = sensor length
Pin assignment: 1 = (+), 2 = (OUT 1) 3 = (GND), 4 = (OUT 2/IO-Link), EN 60947-5-7
LED 1: yellow = measuring operation, red = error
LED 2: green = voltage signal, blue = current signal

Sensor, Series SN3

- welding-proof
- Plug, M12, 3-pin
- welding-proof
- electronic PNP
- Indirect mounting for series PRA, PRE, CCI, KPZ, KHZ, FLT, GPC, CVI



Ambient temperature min./max.	-25 ... 70 °C
Protection class	IP67, IP65
Switching point precision	±0,1 mT
Nominal current, actuated state	≤ 10 mA
Quiescent current (without load)	≤ 5 mA
Min./max. DC operating voltage	10 V DC
LED status display	Yellow
Vibration resistance	55 Hz, 1 mm
Shock resistance	30 g / 11 ms

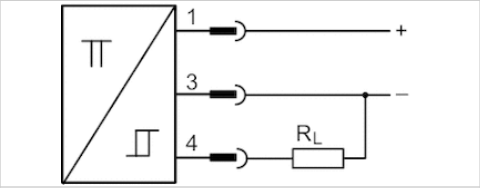

Technical data

Part No.	Type of contact	Voltage drop U at Imax	DC switching current, max.
0830100438	electronic PNP	≤ 1,8 V	0.2 A

Part No.	Max. switching frequency
0830100438	20 Hz

Part No.	Version	welding-proof
0830100438	short circuit resistant Protected against polarity reversal	welding-proof

Technical information

Material	
Housing	Polyamide

Dimensions

Dimensions

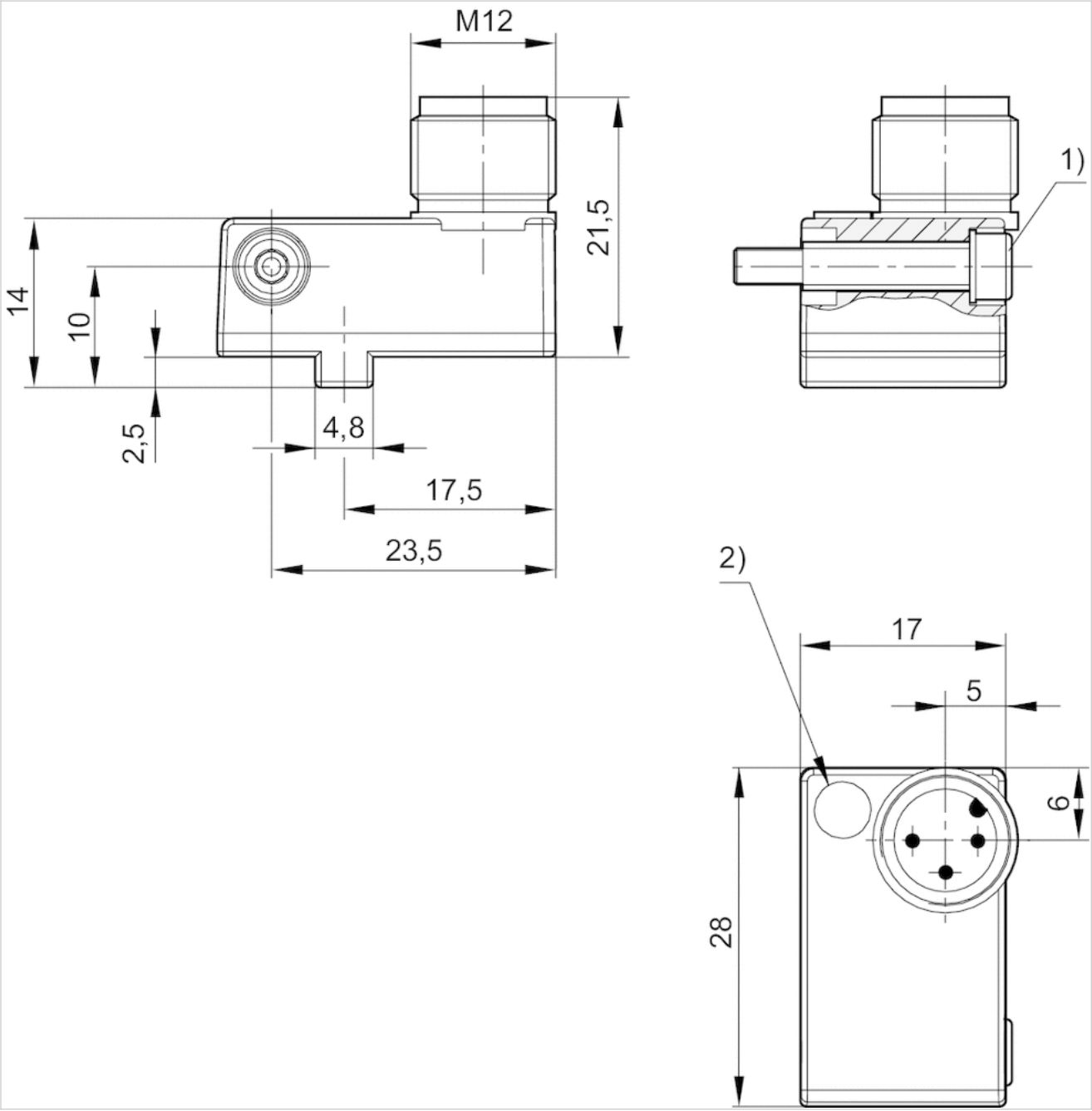

1) Clamping screw
2) LED
Pin assignments: 1 = (+), 3 = (-), 4 = (OUT), EN 60947-5-2:1998

Pin assignments

Pin assignments

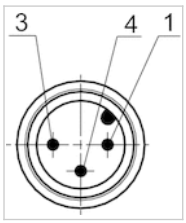

Pin	1	3	4
Allocation	(+)	(-)	(OUT)
			EN 60947-5-2:1998

Series CAT

- Measuring instrument for adjusting the pneumatic cushioning
- for MNI, CSL-RD, CCL-IS, ICS, RPC, PRA/TRB, ITS



Certificates	CE declaration of conformity
Ambient temperature min./max.	0 ... 40 °C
Measurement range Min.	0.2 m/s
Measurement range Max.	2 m/s
LED status display	Green Yellow Red
Protection class	IP50
Weight	0.12 kg

Technical data

Part No.	for series
R412026160	MNI, CSL-RD, CCL-IS, ICS, RPC, PRA/TRB, ITS

Scope of delivery: 1 measuring instrument, 2 fastening strips, 1 power pack 3.7 V, 1 USB charging cable, Operating instructions, QR code notice, 1 case with foam inlay

Technical information

The CAT measuring instrument uses Bluetooth radio technology for wireless connection with the "Aventics" app, which is available free of charge in the Android/Play Store and/or the IOS/App Store.

Technical information

Material	
Housing	Luran S

Dimensions

Dimensions

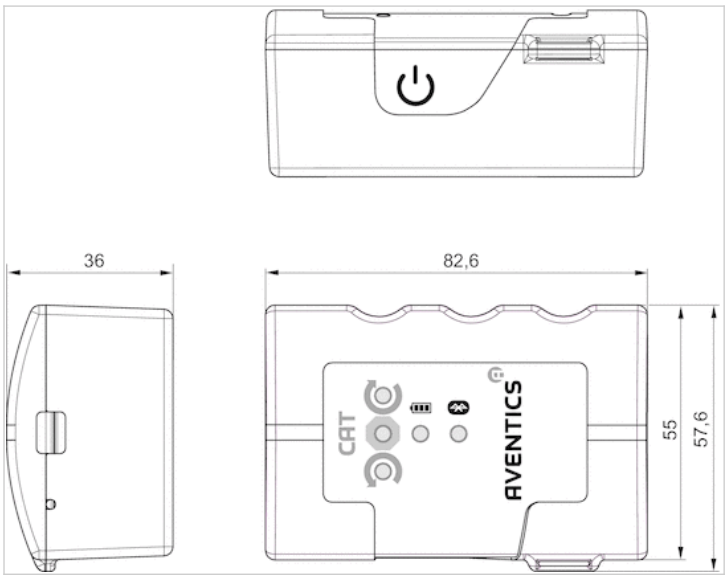

Sensor mounting, Series CB1

- for series SN3
- to mount on cylinder PRA, KPZ, GPC, CCI, KHZ



Weight 0.007 kg

Technical data

Part No.	for series
1827020386	SN3

Technical information

Material	
	Aluminum

Dimensions

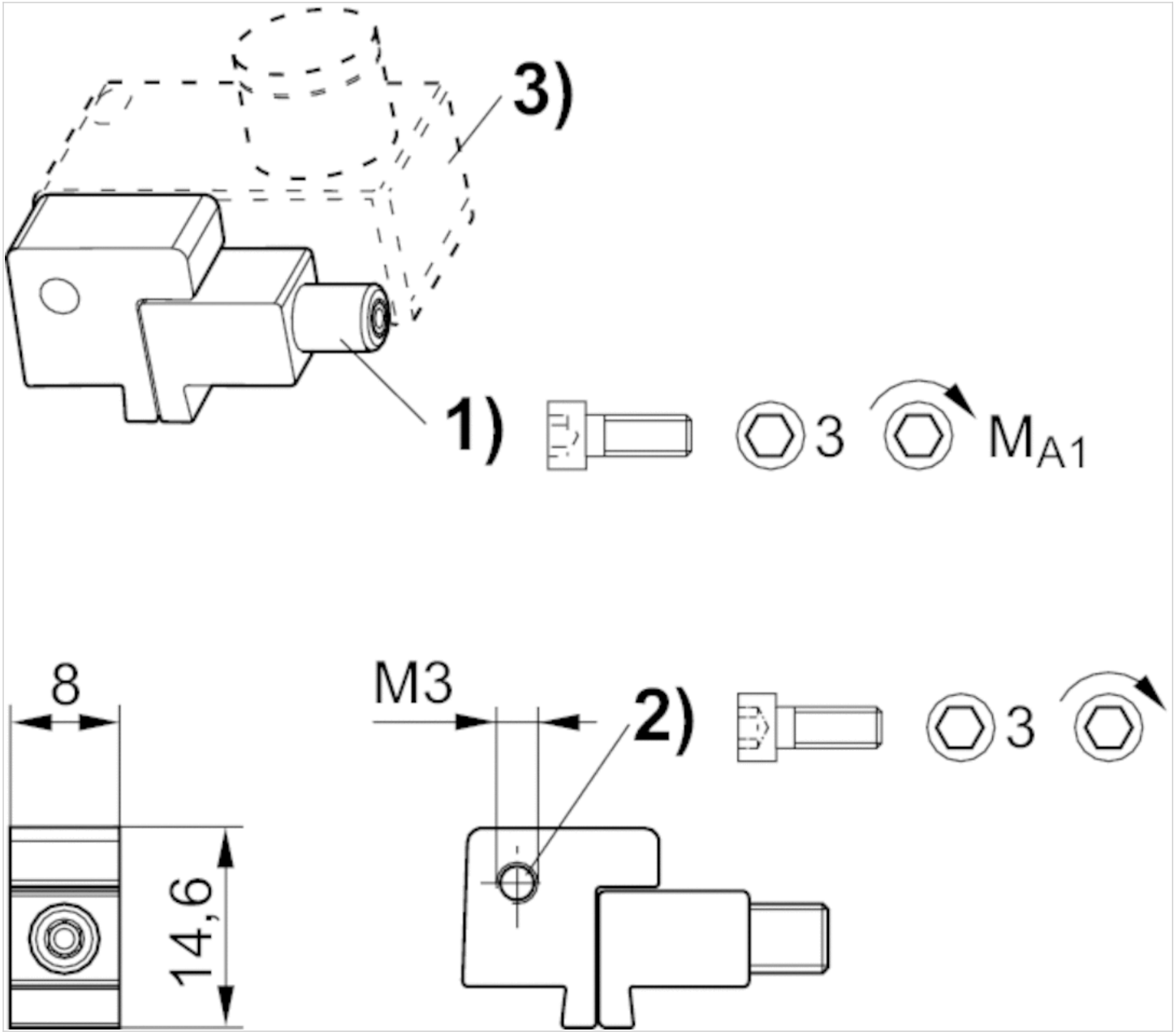

1) Clamping screw 2) Mounting screw for sensor 3) Sensor

Dimensions

Part No.	1)	MA1 [Nm]
1827020386	M3x25	1,8 +0,4

Sensor mounting, Series CB1

- for series ST6, SM6
- to mount on cylinder TRB, C12P, 167, CVI, TRR, 523



Weight See table below

Technical data

Part No.	Cylinders Ø min.	Cylinders Ø max.	for series	Weight
1827020282	32 mm	40 mm	ST6, SM6	0.016 kg
1827020283	50 mm	63 mm	ST6, SM6	0.029 kg
1827020284	80 mm	100 mm	ST6, SM6	0.042 kg

Technical information

Material	
	Aluminum

Dimensions

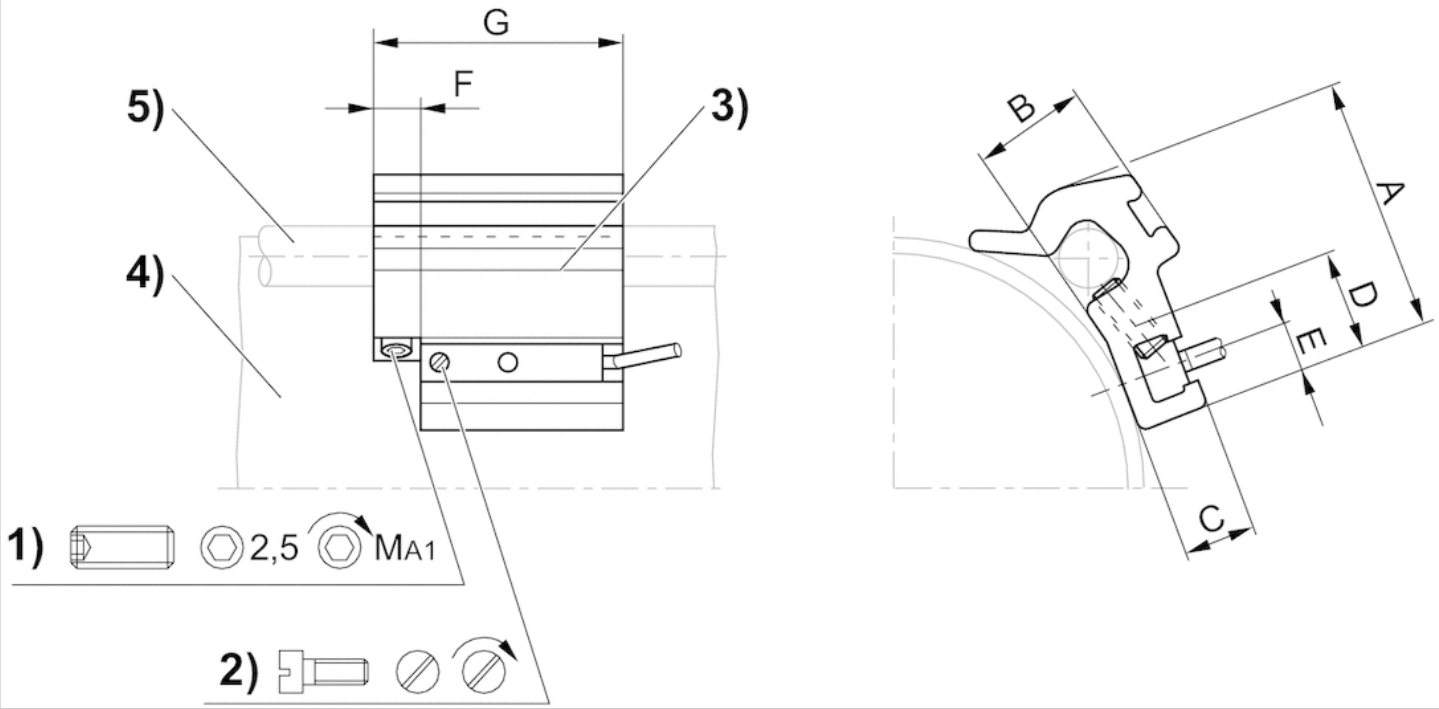

1) Clamping threaded pin 2) Mounting screw for sensor 3) Sensor 4) Cylinder profile 5) Tie rod

Dimensions

Part No.	A	B	C	D	E	F	G	1)	MA1 [Nm]
1827020282	26	10	7	14	5	8	40	M5x8	2 ±0,2
1827020283	32.5	15.5	7	14	5	8	40	M5x10	2 ±0,2
1827020284	43	17	6.9	14	5	8	40	M5x16	2 ±0,2

Sensor mounting, Series CB1

- for series SN1, SN2
- to mount on cylinder PRA



Weight 0.006 kg

Technical data

Part No.	for series
1827020084	SN1, SN2

Technical information

Material	
	Aluminum

Dimensions

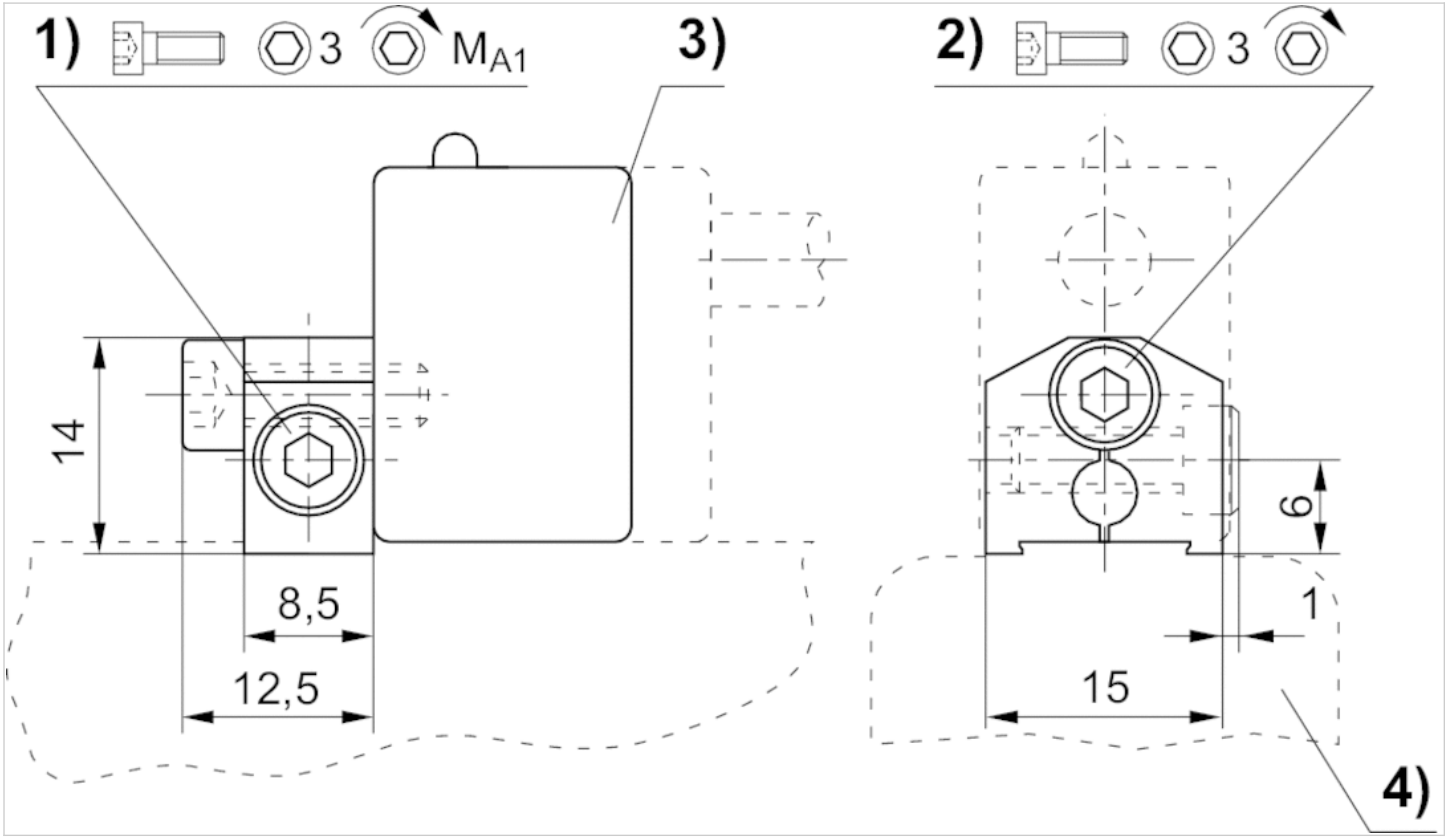

1) Clamping screw 2) Mounting screw for sensor 3) Sensor 4) Cylinder profile

Dimensions

Part No.	1)	MA1 [Nm]
1827020084	M4x12	2

Round plug connector, Series CON-RD

- Socket, M8x1, 3-pin, A-coded, straight, 180°
- UL (Underwriters Laboratories)
- unshielded



Connection type	Soldering
Ambient temperature min./max.	-25 ... 80 °C
Operational voltage	48 V AC/DC
Protection class	IP67
Weight	0.009 kg

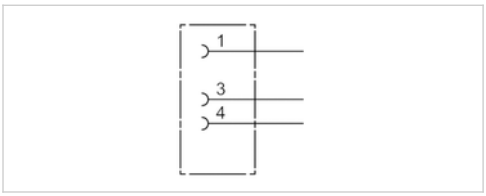

Technical data

Part No.	Max. current	suitable cable-Ø min./max
1834484173	4 A	3.5 / 5 mm

Technical information

The specified protection class is only valid in assembled and tested state.

Technical information

Material	
Housing	Polyamide

Dimensions

Dimensions

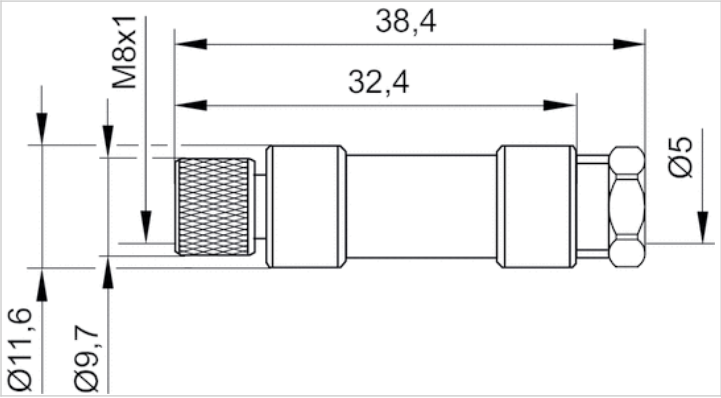

Pin assignments

Pin assignment, socket

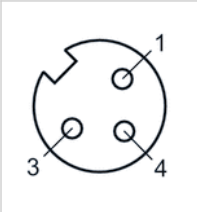

Round plug connector, Series CON-RD

- Socket, M8x1, 3-pin, A-coded, angled, 90°
- UL (Underwriters Laboratories)
- unshielded



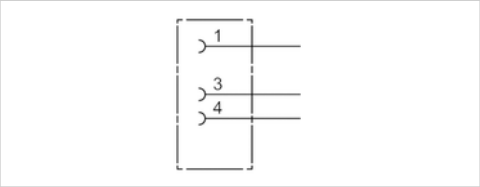

Connection type	Soldering
Ambient temperature min./max.	-40 ... 85 °C
Operational voltage	48 V AC/DC
Protection class	IP67
Weight	0.01 kg

Technical data

Part No.	Max. current	Contact assignment	suitable cable-Ø min./max
1834484174	4 A	3	3.5 / 5 mm

Technical information

The specified protection class is only valid in assembled and tested state.

Technical information

Material	
Housing	Polyamide

Dimensions

Dimensions

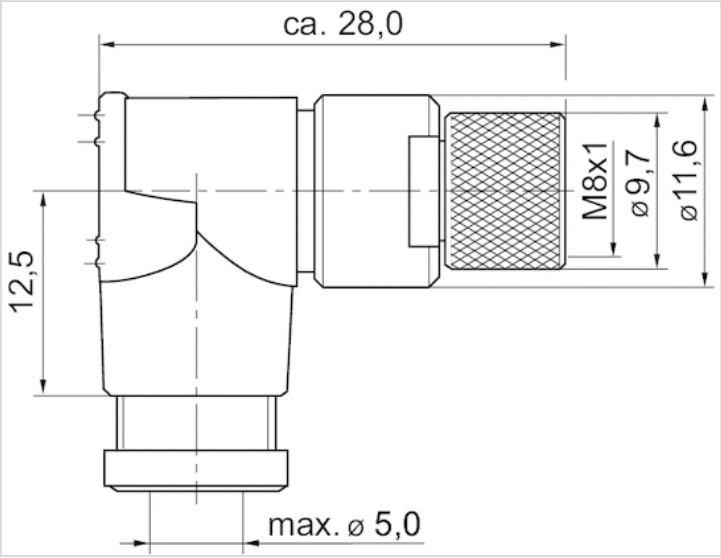

Pin assignments

Pin assignment, socket

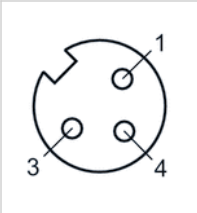

Round plug connector, Series CON-RD

- Socket M8x1 3-pin A-coded straight 180°
- open cable ends
- with cable
- UL (Underwriters Laboratories)
- unshielded



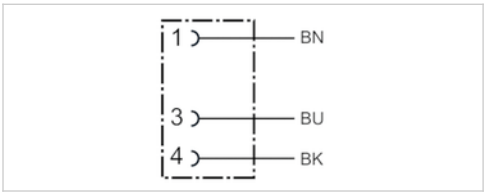

Ambient temperature min./max.	-25 ... 85 °C
Operational voltage	48 V AC/DC
Protection class	IP67
Wire cross-section	0.24 mm²
Weight	See table below

Technical data

Part No.	Max. current	Number of wires	Cable-Ø	Cable length	Certification	Weight
1834484166	4 A	3	4.5 mm	3 m	UL (Underwriters Laboratories)	0.087 kg
1834484168	4 A	3	4.5 mm	5 m	UL (Underwriters Laboratories)	0.141 kg
1834484247	4 A	3	4.5 mm	10 m	UL (Underwriters Laboratories)	0.277 kg

Technical information

The specified protection class is only valid in assembled and tested state.

Technical information

Material	
Housing	Polyurethane
Cable sheath	Polyurethane

Dimensions

Dimensions

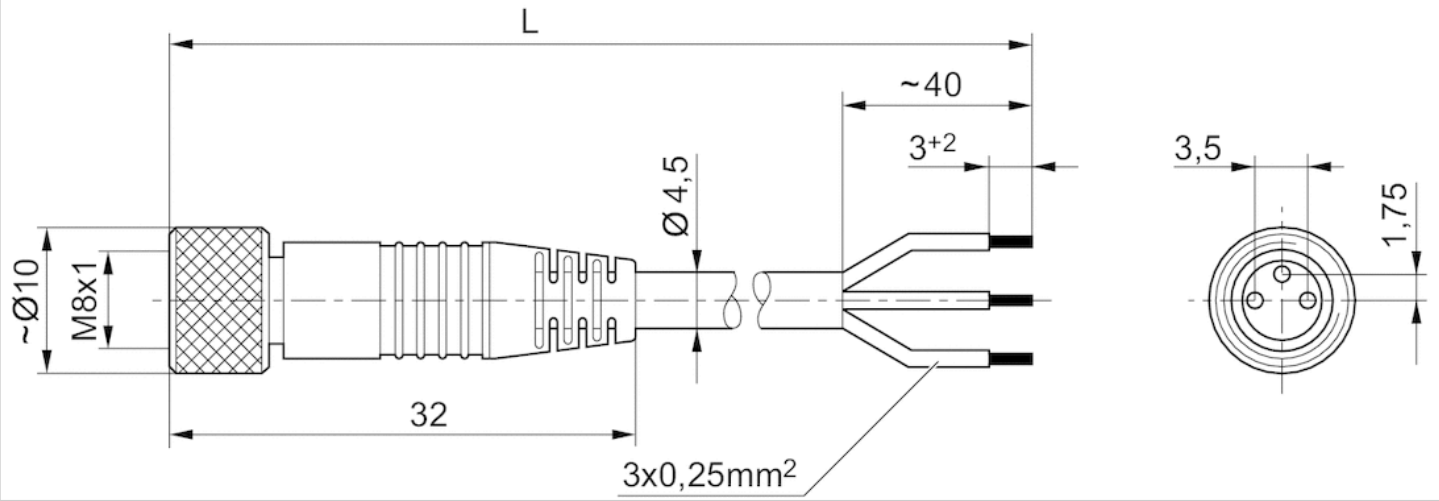

L = length

Pin assignments

Pin assignment, socket

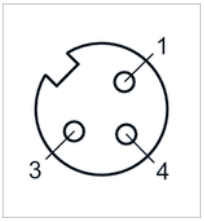

(1) BN=brown
(3) BU=blue
(4) BK=black

Round plug connector, Series CON-RD

- Socket M8x1 3-pin A-coded angled 90°
- open cable ends
- with cable
- unshielded



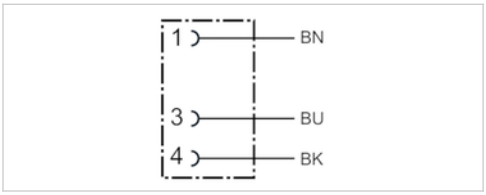

Ambient temperature min./max.	-40 ... 85 °C
Operational voltage	48 V AC/DC
Protection class	IP67
Wire cross-section	0.24 mm²
Weight	See table below

Technical data

Part No.	Max. current	Number of wires	Cable-Ø	Cable length	Weight
1834484167	4 A	3	4.5 mm	3 m	0.087 kg
1834484169	4 A	3	4.5 mm	5 m	0.139 kg
1834484248	4 A	3	4.5 mm	10 m	0.279 kg

Technical information

The specified protection class is only valid in assembled and tested state.

Technical information

Material	
Housing	Polyurethane
Cable sheath	Polyurethane

Dimensions

Dimensions

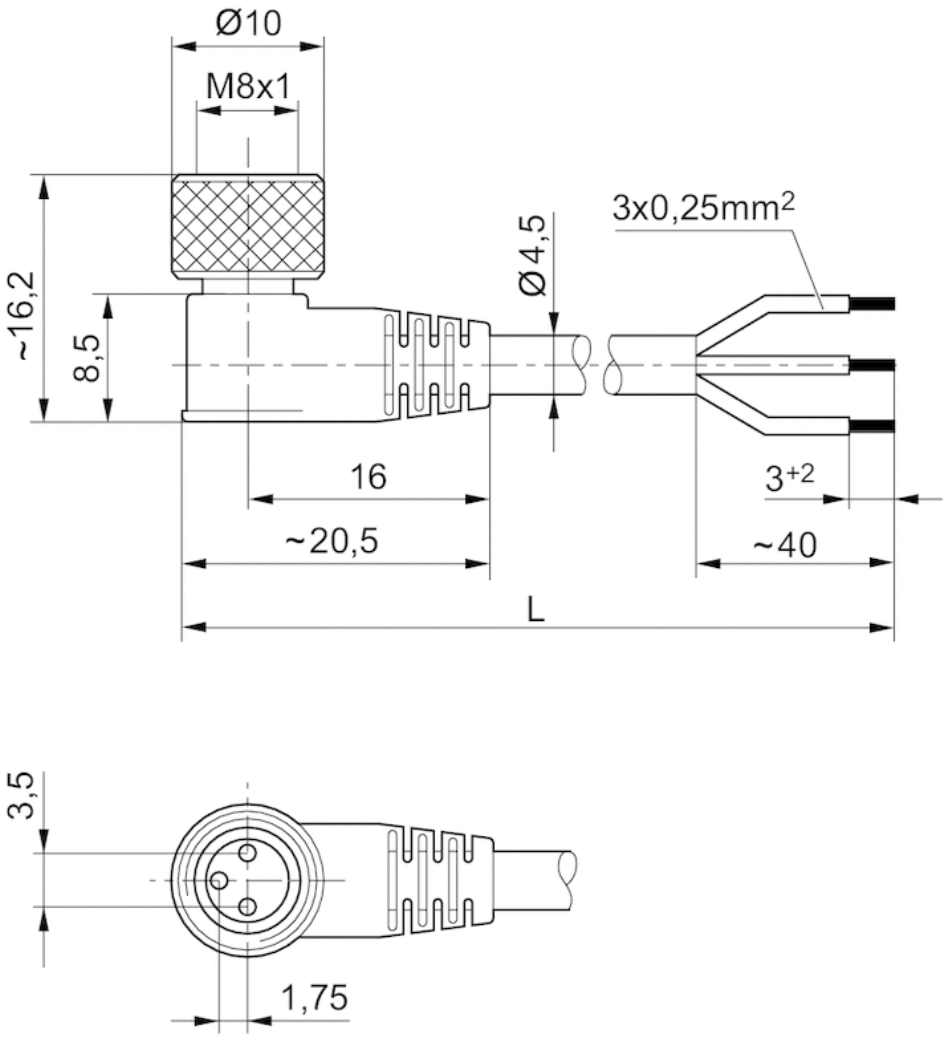

L = length

Pin assignments

Pin assignment, socket

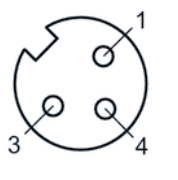

(1) BN=brown
(3) BU=blue
(4) BK=black

Round plug connector, Series CON-RD

- Socket M12x1 5-pin A-coded angled 90°
- open cable ends
- for DeviceNet
- with cable
- unshielded



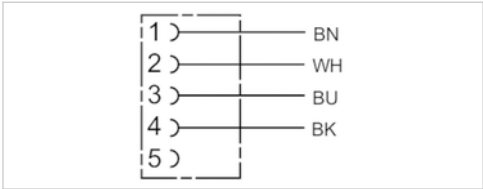

Ambient temperature min./max.	-40 ... 85 °C
Operational voltage	48 V AC/DC
Protection class	IP65
Wire cross-section	0.34 mm²
Weight	See table below

Technical data

Part No.	Max. current	Number of wires	Cable-Ø	Cable length	Weight
1834484259	4 A	4	5.2 mm	3 m	0.126 kg
1834484260	4 A	4	5.2 mm	5 m	0.195 kg
1834484261	4 A	4	5.2 mm	10 m	0.38 kg

Technical information

The specified protection class is only valid in assembled and tested state.

Technical information

Material	
Cable sheath	Polyurethane

Dimensions

Dimensions

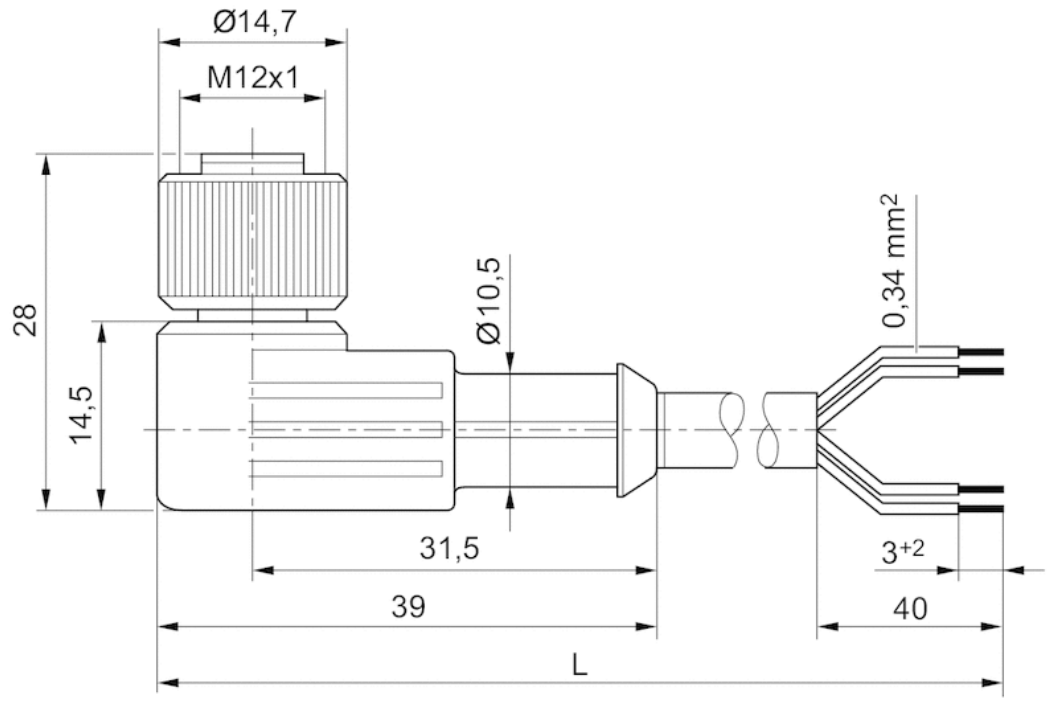

L = length

Pin assignments

Pin assignment, socket

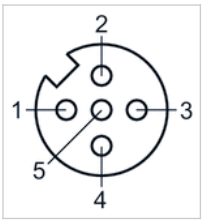

(1) BN=brown
(2) WH=white
(3) BU=blue
(4) BK=black
(5) not assigned

Efficient pneumatic solutions, our program: cylinders and drives, valves and valve systems, air supply management



Visit us: Emerson.com/Aventics

Your local contact: Emerson.com/contactus

Emerson.com

Facebook.com/EmersonAutomationSolutions

LinkedIn.com/company/Emerson-Automation-Solutions

Twitter.com/EMR_Automation

An example configuration is depicted on the title page. The delivered product may thus vary from that in the illustration. Subject to change. This Document, as well as the data, specifications and other information set forth in it, are the exclusive property of AVENTICS GmbH. It may not be reproduced or given to third parties without its consent. Only use the AVENTICS products shown in industrial applications. Read the product documentation completely and carefully before using the product. Observe the applicable regulations and laws of the respective country. When integrating the product into applications, note the system manufacturerâ€™s specifications for safe use of the product. The data specified only serve todescribe the product. No statements concerning a certain condition or suitability for a certain application can be derived from our information. The information given does not release the user from the obligation of own judgment and verification. It must be remembered that the products are subject to a natural process of wear and aging.

The Emerson logo is a trademark and service mark of Emerson Electric Co. Brand logotype are registered trademarks of one of the Emerson family of companies. All other marks are the property of their respective owners. © 2017 Emerson Electric Co. All rights reserved.
2019-03

EMERSON

CONSIDER IT SOLVED™