TU 50 TF

Compliance with standard	ISO
Housing material	Cast iron
Sealing solution	Standard seals with additional flingers

Dimensions

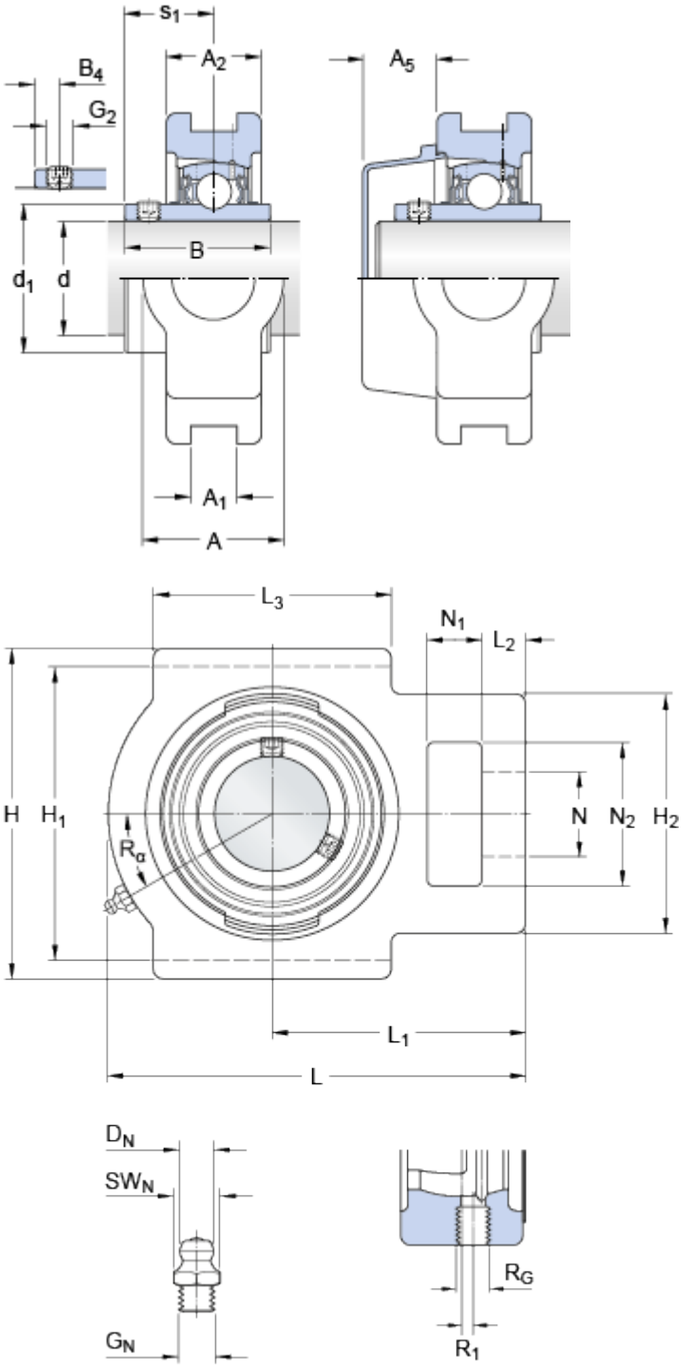

d		50	mm
d_1	≈	62.51	mm
A		49	mm
A_1		17.5	mm
A_2		36	mm
A_5		30	mm
B		51.6	mm
B_1		51.6	mm
B_4		9	mm
H		117	mm
H_1		101	mm
H_2		83	mm
L		149	mm
L_1		90	mm
L_2		16	mm
L_3		86	mm
N		29	mm
N_1		19	mm
N_2		49	mm
s_1		32.6	mm

Threaded hole

R_G	1/4-28 UNF	
R_1	4	mm
R_α	30	°

Grease fitting			
	D_N	6.5	mm
	SW_N	7	mm
	G_N	1/4-28 SAE-LT	

Calculation data

Basic dynamic load rating	C	35.1	kN
Basic static load rating	C_0	23.2	kN
Fatigue load limit	P_u	0.98	kN
Limiting speed		4000	r/min
with shaft tolerance h6			

Mass

Mass bearing unit		2.35	kg

Mounting information

Grub (set) screw	G_2	M10x1	
Hexagonal key size for grub screw	N	5	mm
Recommended tightening torque for grub screw		16.5	N·m

Included products

Housing	TU 510 M
Bearing	YAR 210-2F

Associated products

End cover	ECY 210