THE INFORMATION CONTAINED IN THIS DRAWING IS THE SOLE PROPERTY OF L-COM, INC. ANY REPRODUCTION IN PART OR WHOLE WITHOUT THE WRITTEN PERMISSION OF L-COM, INC. IS PROHIBITED.

RoHS Compliant ✔

REVISIONS			
REV	DESCRIPTION	DATE	CHANGED BY
A	RELEASED FOR PRODUCTION	03/04/02	MCCORMICK
B	ECN# 2731 - ADDED ROHS STAMP	10/23/07	D.GRIFFIN
.	.	.	.
.	.	.	.

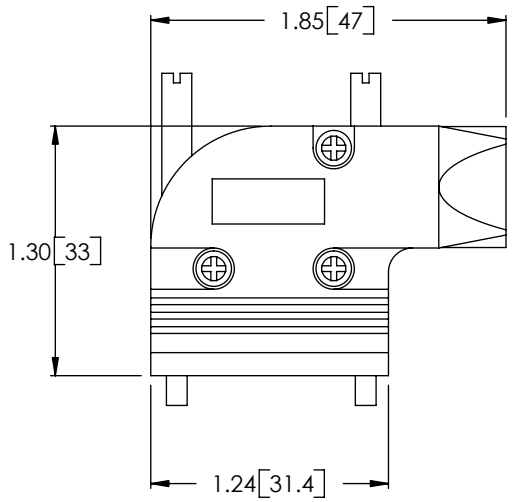

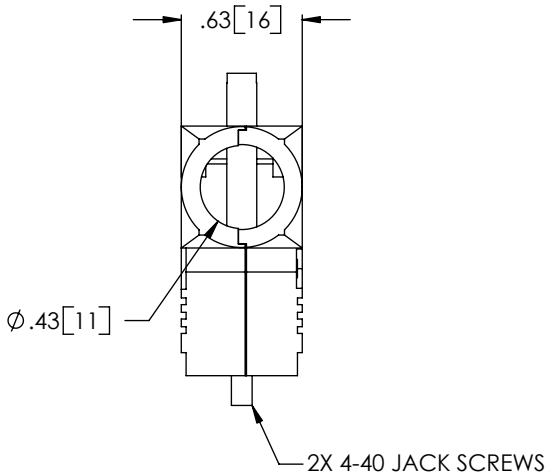

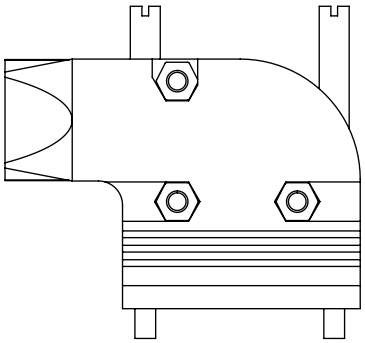

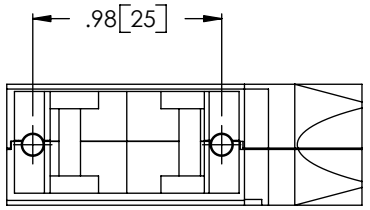

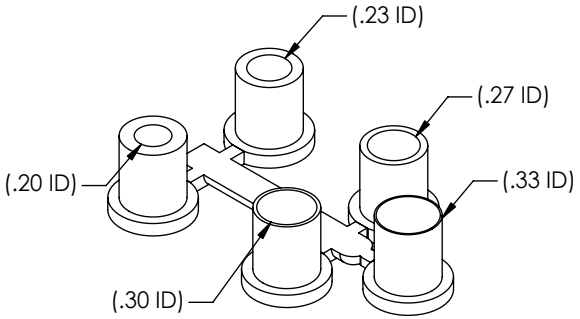

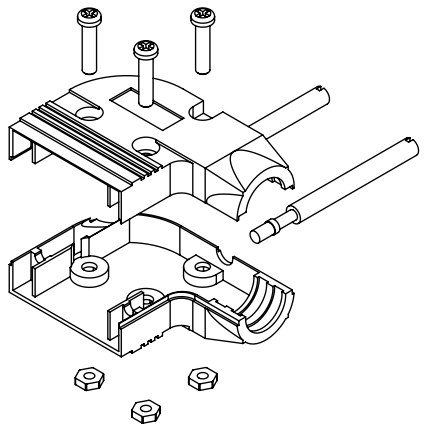

GROMMETS AS SUPPLIED

NOTES:
1. MATERIAL: ZINC ALLOY
   GROMMET: SYNTHETIC RUBBER (BLACK)
2. FINISH: NICKEL PLATED

UNLESS OTHERWISE SPECIFIED, DIMENSIONS ARE IN INCHES [mm]
TOLERANCES TO BE:
.X ±.1 [2.5] ANGLES ±2°
.XX ±.01 [.25]
.XXX ±.005 [.13]
OVERALL CABLE LENGTH TOL:
≤ 60 [1524] +3 [76.2] / - 0
> 60 [1524] +5% / -0%
PROJ

CONFIGURATION DETAILS OF UNDIMENSIONED FEATURES MAY VARY

APPROVALS	DATE
DRAWN BY MCCORMICK	02/27/02
CHECKED BY D.PARHAM	02/27/02
APPROVED BY R.CARRICK	02/27/02

L-com CONNECTIVITY PRODUCTS
45 BEECHWOOD DRIVE
NORTH ANDOVER, MA
01845

CATEGORY
DATA CABLING

PRODUCT DESCRIPTION
HOOD CAST ALLOY
DB9 & HD15 D-SUB RIGHT ANGLE

SIZE	FSCM NO.	DWG. NO.	REV.
A	43321	SDRA9AG	B

SCALE: NONE | CAD FILE: SDRA9AG.SLDDRW | SHEET 1 OF 1