XV3 Series
High Power Pre-Charge Resistors



- Pre-charge / discharge resistor
- Intrinsically safe
- Aluminium housed
- Automotive grade
- Power rating: 100W
- Resistance ranges from 10Ω to 250Ω
- Tolerances of 0.5%,1%, 2%, 5% 10%
- Non-inductive winding available
- Compact design
- High voltage cable for electric & hybrid vehicles

RoHS Compliant ✓

Performance Data	Table 2
Resistance	10Ω ~ 250Ω
Power	100W ±5% (without heatsink)
TCR	260ppm/°C
Design voltage	√(Px R)
Maximum operating voltage	850VDC
Maximum current	15A
Dielectric voltage	4500V
Insulation resistance	100MΩ
High temperature storage	125°C, 1000hr, (±1% +0.05Ω)
High temperature & humidity	85°C, 85% RH, 1000hr, 10% of operating power, 1000hr (±3% +0.05Ω)
Operational life	125°C at rated power, 1000hr, (±3% +0.05Ω)
Ambient temperature	-40°C ~ +155°C (±2% +0.05Ω)
Temperature cycling	(-55°C ~ +125°C), Each dwell time, 30 mins, 1h/cyc, 1000 cycles (±2% +0.05Ω)
Load life	300,000 cycles (±3% +0.05Ω)
Short duration	200ms @ 15A (±2% +0.05Ω)
Mechanical vibration	100G, 6ms half sine, 3 times/axis, Total 6 axis (±1% +0.05Ω)
Short time overload	5X for 5 sec (±2% +0.05Ω)
Charging/discharging test	95% ~ 98% Precharging ratio, 300,000 cycles (±3% +0.05Ω)
Short circuit	Pulse Duration: 200ms. Cycle time: 2 secs 1 time: 5 cycles. Total 5 times (±2% +0.05Ω)
Failure test	500ms ~ 1sec
Terminations	Wire length 200±10mm. High voltage cable, Cu-R4XLPO-HV-3.0mm² (-40°C ~ +150°C / 3000hr)
Weight (g)	125g

Performance graphs — **Fig. 1**

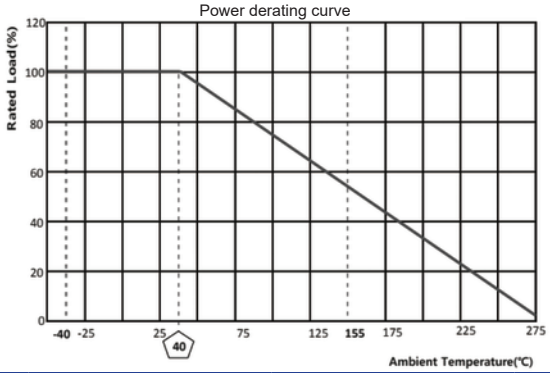

XV3 111423JHM

Specifications are subject to change without notice. E&OE.

Dimensions (mm)

Fig. 2

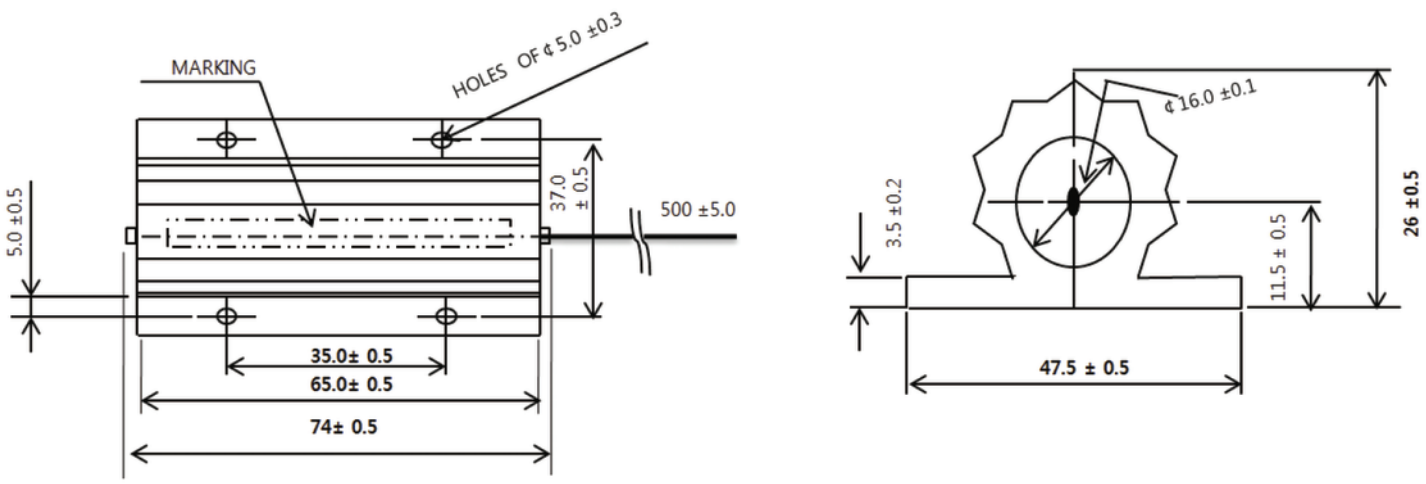

Example Ordering Code

XV3 - 100 - 250 - J - N - ___

Series	Power (W)	Resistance Ω	Tolerance ± %	Windings	
XV3	100	10Ω ~ 250Ω	D ± 0.5 F ± 1 G ± 2 J ± 5 K ± 10	Blank = standard N = Non-Inductive	Reserved for custom modifications

Specifications are subject to change without notice. E&OE.