Data Sheet no. 59500

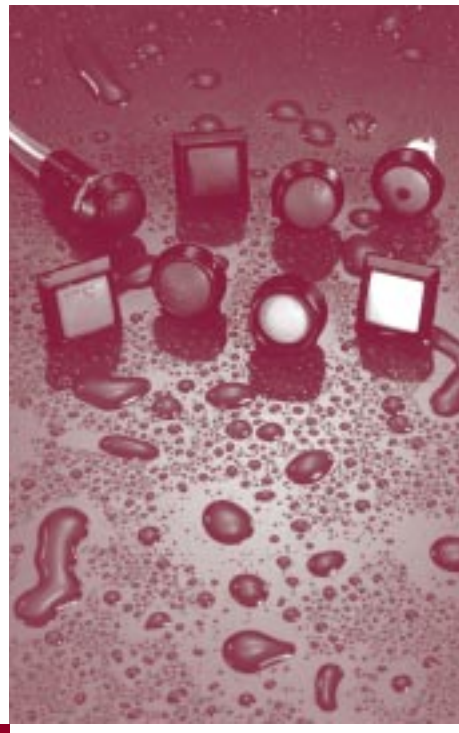

# SERIES 59 – MINIATURE SEALED PUSHBUTTON

## FEATURES

- Non-spark material
- Wide temperature range – Up to 125°C
- Panel sealed – To IP67
- High environmental specifications
- Gold contacts
- Status illumination

## NON-STANDARD OPTIONS

- Overboot for protection against icing
- PCB terminals
- High round bezel
- Surface or sublimation legend printing on the button (non-illuminated version)

ITW Switches

# Technical Information

## Series 59

The Series 59 is a range of miniature, momentary action, rugged panel sealed pushbutton switches.

The Series is available with square or round bezel versions, with or without LED status illumination.

A locknut is supplied with each switch.

A choice of body material is provided of either a non spark zinc alloy or a hard wearing moulded PBT therefore making this switch suitable for use in most applications. It is panel sealed to IP67 and is designed to be impact resistant. The small size, robustness and panel sealing make this switch ideal in harsh environments.

### Non-Illuminated Version

The non-illuminated range includes a choice of 7 button colours with solder terminal connection. PCB terminals, a high round bezel, surface and sublimation printing are available as non-standard.

### Status Illuminated Version

An illuminated version is available in the round bezel versions with a choice of 3 button colours and 2 high brightness LED colours. Non standard options include additional button and LED colours (subject to minimum order quantities).

## Mechanical

| | |
|---|---|
| Travel (nom) | 2,3mm |
| Life (max) | 1,000,000 cycles |
| Operating force (nom) | 3N |
| Contact bounce (nom) | 1ms |
| Panel thickness (max) | 1,5 - 3mm |
| Panel cut out | ø13,6mm (with 'D' flat) |

## Electrical

### Switch & LED

| | |
|---|---|
| SWITCH | |
| Dielectric strength | 1000V a.c. |
| Insulation resistance | 1GΩ |
| Contact resistance | 50mΩ |
| Current rating (typical) | 400mA at 32V a.c. resistive<br>100mA at 50V a.c. resistive<br>125mA at 125V a.c. resistive |
| Life (min) | 500,000 cycles |
| Switching power (max) | 16VA a.c. |
| LED | |
| Typical fwd voltage (VF at I operating) | 2,2V |
| Max fwd voltage (VF at I operating) | 3,0V |
| Forward current (I operating) | 20mA |
| Meantime between failures | 100,000 hours |
| Luminous intensity (Iv at Iopr) | Red LED – 100mcd |
| Luminous intensity (Iv at Iopr) | Green LED – 160mcd |

## Environmental & Physical

| | |
|---|---|
| Ingress protection | IP67 |
| Shock | 100g |
| Vibration | DEF STD 07-55 |
| Non-Illuminated | |
| Operating temperature range | -40°C to +125°C with zinc alloy body<br>-40°C to +105°C with PBT body |

## Environmental & Physical (continued)

| | |
|---|---|
| Illuminated | |
| Operating temperature range | -35°C to +85°C |
| Body material | Zinc alloy (standard) or PBT |
| Button material | PBT |
| Contacts | Gold plated nickel |
| Terminals | Gold plated brass |
| Salt mist | BS2011 Part 2:1 |
| Soldering information | 320°C max for 3s |

## Body Style

59 – [ ][ ][ ][ ][ ]

| | |
|---|---|
| Standard round bezel | 1 |
| Standard square bezel | 2 |
| Illuminated round bezel | 4 |
| PBT round bezel | 5 |

## Termination

| | |
|---|---|
| Solder terminals | 1 |

## Button Colour

| | |
|---|---|
| Black | 1 |
| Red | 2 |
| Green | 3 |
| White | 4 |
| Yellow | 5 |
| Blue | 6 |
| Orange | 7 |

(Illuminated version only available with Black, Red and Green as standard. Non-standard colours subject to MOQ's)

## LED Colour

| | |
|---|---|
| Red | R |
| Green | G |

(This digit is only required for illuminated part numbers)

## Panel Mounting & Construction Information

The Series 59 mounts easily into panels of minimum 1,5mm and maximum 3mm thickness. Front panel sealing to IP67 is achieved by the use of a sealing 'O' ring which is fitted behind the bezel of the body of the switch before it is inserted into the panel hole cut out. It is held onto the panel by means of a brass locknut, tightened down by a 14mm spanner, to a torque of between 1.0Nm to 2.0Nm to achieve the correct sealing pressure.

A 'D' flat is provided to prevent rotation.

## Ingress Protection Impact Key

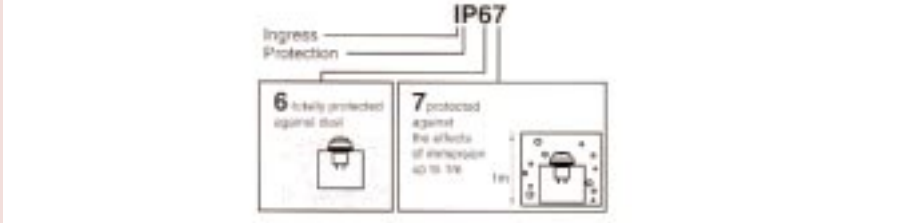

# SERIES 59
# Miniature Sealed Pushbutton

## Technical Information

### Product Dimensions

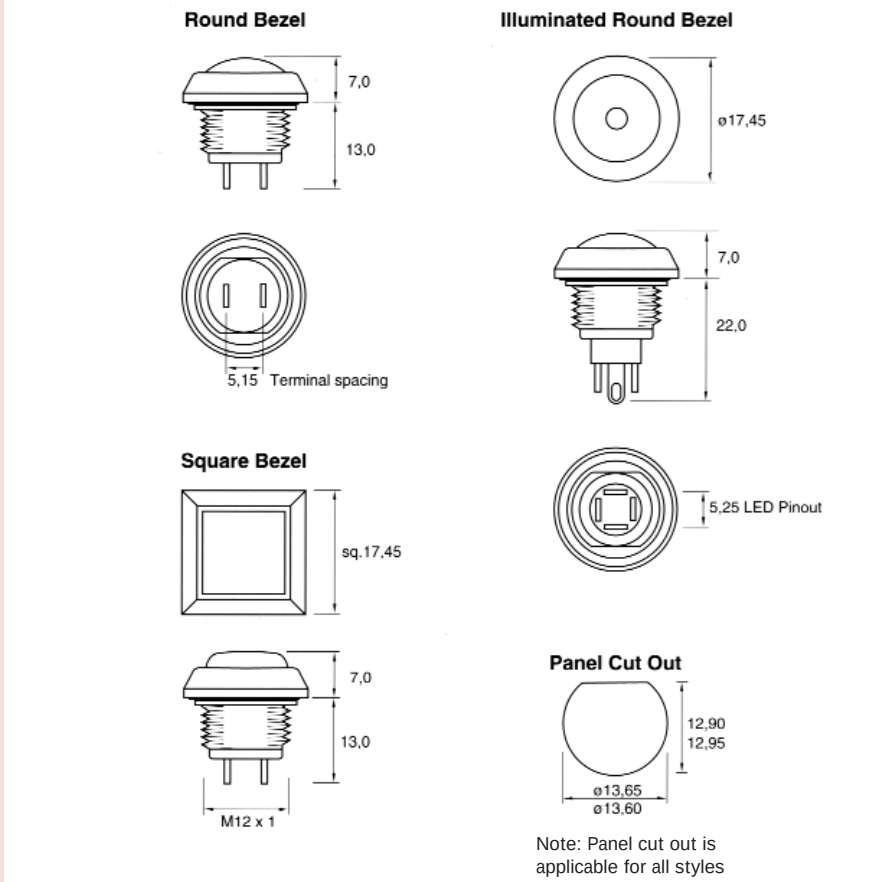


Note: Panel cut out is applicable for all styles

All dimensions in Millimetres

### Circuit Form




### Application References

- Communications
- Instrumentation
- Data entry
- Military environments
- Environmentally demanding keypads
- Mass transport controls

### Further Information

For further information on our complete range of switch products, visit our website – www.itwswitchcon.com or contact our Sales Office.

ITW Switches

ITW Switches, Division of ITW Limited, Norway Road, Hilsea, Portsmouth PO3 5HT, UK
Tel: +44 (0)2392 694971 Fax: +44 (0)2392 666352 Website: www.itwswitchcon.com

Due to our policy of continuous product development, ITW Switches retain the right to change the specification at any time without prior notice.
Designed & printed in the UK.