6004-2RSH

SKF Explorer

Dimensions

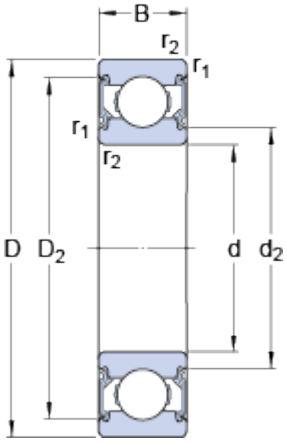

d		20	mm
D		42	mm
B		12	mm
d_2		24.65	mm
D_2		37.19	mm
$r_{1,2}$	min.	0.6	mm

Abutment dimensions

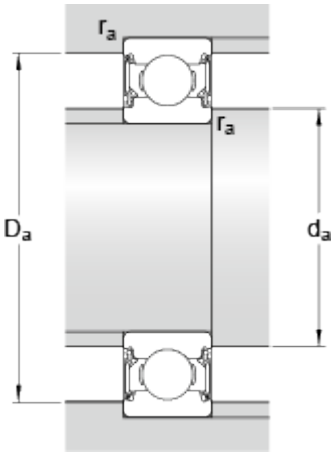

d_a	min.	23.2	mm
d_a	max.	24.5	mm
D_a	max.	38.8	mm
r_a	max.	0.6	mm

Calculation data

Basic dynamic load rating	C	10	kN
Basic static load rating	C_0	5	kN
Fatigue load limit	P_u	0.212	kN
Limiting speed		11000	r/min
Calculation factor	k_r	0.025	
Calculation factor	f_0	14	

Mass

Mass bearing		0.067	kg