SSTB

Stainless steel terminal box

CONNECT AND PROTECT



The stainless steel terminal box range, SSTB, with a IP 66 protection degree, is available off the shelf in many different sizes. The SSTB range is well suited for indoor and outdoor environments thanks to its corrosion resistance. Water and dust are prevented from entering the terminal box, thus eliminating the risk for component failure, and with that, unnecessary downtime.

Material: AISI 304L pre-grained stainless steel / AISI 316L (on request). Body: 1 mm. Cover: 1.5 mm.

Body: Folded and seam welded. Four M6x13 studs for bottom profile / mounting plate fixation.

Gasket: For AISI 316L, sealing is ensured by an injected one piece silicone gasket.

Earthing: M8x18 mm earthing studs in body and cover, M8 nuts, earthing washers and earthing labels.

Protection: IP 66 | TYPE 4X, 12, 13 | IK 08.

Finish: 400 pre-grained stainless steel.

Delivery: Body, cover, cover screws, fixing screws, cover plugs and earthing facilities.

IP 66 | TYPE 4X, 12, 13 | IK 08

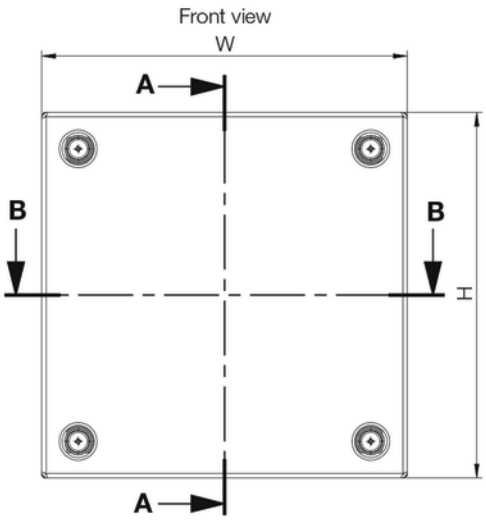

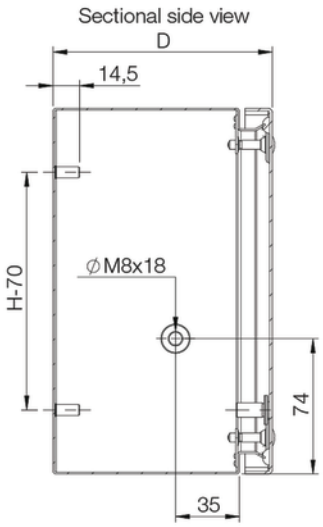

SECTION A-A

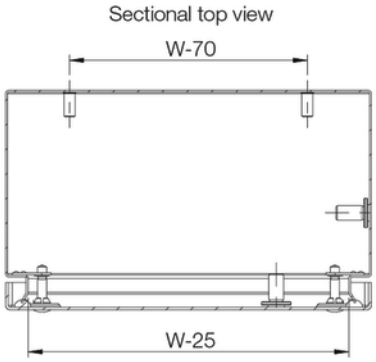

SECTION B-B

Box dimension				
H	W	D	Weight (kg)	Item no.
150	150	80	1.10	SSTB151508
150	150	80	1.10	SSTB151508-316
150	150	120	1.30	SSTB151512
150	150	120	1.30	SSTB151512-316
150	300	80	1.80	SSTB153008
150	300	80	1.80	SSTB153008-316
150	300	120	2.15	SSTB153012
150	300	120	2.15	SSTB153012-316
200	200	80	1.65	SSTB202008
200	200	80	1.65	SSTB202008-316
200	200	120	1.95	SSTB202012
200	200	120	1.90	SSTB202012-316
200	300	80	2.25	SSTB203008
200	300	80	2.25	SSTB203008-316
200	300	120	2.55	SSTB203012
200	300	120	2.55	SSTB203012-316
200	400	80	2.80	SSTB204008
200	400	80	2.80	SSTB204008-316
200	400	120	3.20	SSTB204012
200	400	120	3.15	SSTB204012-316
200	500	120	3.90	SSTB205012
200	500	120	3.90	SSTB205012-316
200	600	120	4.60	SSTB206012
200	600	120	4.55	SSTB206012-316
200	800	120	5.90	SSTB208012
200	800	120	5.90	SSTB208012-316
300	300	80	3.05	SSTB303008
300	300	80	3.05	SSTB303008-316
300	300	120	3.40	SSTB303012
300	300	120	3.45	SSTB303012-316
300	400	120	4.25	SSTB304012
300	400	120	4.30	SSTB304012-316
300	500	120	5.10	SSTB305012
300	500	120	5.10	SSTB305012-316
300	600	120	6.10	SSTB306012
300	600	120	6.10	SSTB306012-316
400	400	120	5.50	SSTB404012
400	400	120	5.40	SSTB404012-316
400	600	120	7.65	SSTB406012
400	600	120	7.55	SSTB406012-316
400	800	120	9.70	SSTB408012
400	800	120	9.70	SSTB408012-316