E30407

Welding adapter for process sensors

WELDING ADAPT D6 HYGIENIC

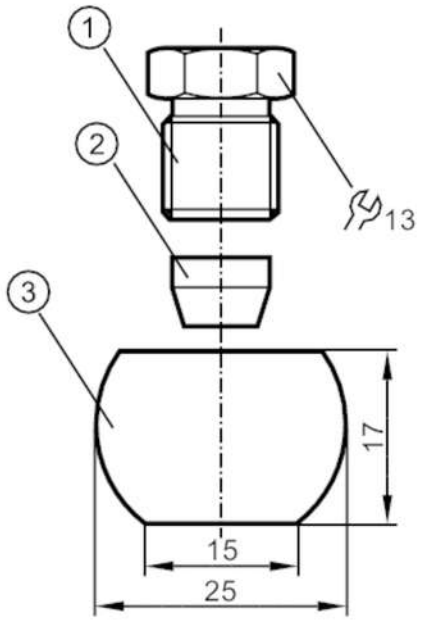

1 clamping screw
2 clamping ring
3 welding bush

EC 1935/2004 FDA

Application		
Design		for temperature sensors Ø 6 mm
Installation		Clamp fitting
Pressure rating	[bar]	10
Operating conditions		
Ambient temperature	[°C]	-10...150
Tests / approvals		
Pressure Equipment Directive		A possible classification to PED depends on the application and has to be carried out by the user / operator.
Pressure Equipment Directive EAC		The adapter is intended for use in devices, machines and installations that do not fall under the categories of the technical rule TR CU 032/2013.
Safety instructions		The compatibility between medium and product material has to be checked in all applications.
Mechanical data		
Weight	[g]	56.1
Materials		stainless steel (1.4404 / 316L); clamping ring: PEEK
Tightening torque	[Nm]	< 10
Sensor connection		Ø 6 mm
Process connection		welding adapter Ø 25 mm
Remarks		
Pack quantity		1 pcs.