TI01010T/09/EN/25.22-00
71564540
2022-03-31

Technical Information
iTEMP TMT82

Dual-input temperature transmitter with HART® protocol and SIL compliance






Application

- Two input channels and HART® communication for the conversion of various input signals into a scalable, analog 4 to 20 mA output signal
- The iTEMP TMT82 is characterized by its reliability, long-term stability, high precision and advanced diagnostic function (important in critical processes)
- For the highest level of safety, reliability and risk reduction
- Universal input for resistance thermometers (RTD), thermocouples (TC), resistance transmitters (Ω) and voltage transmitters (mV)
- Installation in terminal head form B (flat face)
- Optional: installation in field housing for Ex d applications
- Optional: device design for DIN rail mounting
- Optional: installation in field mount housing with separate terminal compartment and plug-on display

Your benefits

- Safe operation in hazardous locations due to international approvals
- SIL certification as per IEC 61508:2010
- High accuracy of measuring point through sensor-transmitter matching
- Reliable operation with sensor monitoring and device hardware fault recognition
- Diagnostics information according to NAMUR NE107
- Several mounting versions and sensor connection combinations
- Fast connection thanks to push-in terminal technology, optional
- Write protection for device parameters

Endress+Hauser
People for Process Automation

Table of contents

Function and system design 3
Measuring principle 3
Measuring system 3

Input 4
Measured variable 4
Measuring range 4
Type of input 5

Output 6
Output signal 6
Failure information 6
Load 6
Linearization/transmission behavior 6
Mains filter 6
Filter 6
Protocol-specific data 6
Write protection for device parameters 7
Switch-on delay 7

Power supply 7
Supply voltage 7
Current consumption 7
Electrical connection 7
Terminal 9

Performance characteristics 9
Response time 9
Update time 9
Reference operating conditions 9
Maximum measured error 9
Sensor adjustment 12
Current output adjustment 12
Operating influences 13
Influence of reference junction 16

Installation 17
Mounting location 17
Orientation 18

Environment 18
Ambient temperature range 18
Storage temperature 19
Altitude 19
Humidity 19
Climate class 19
Degree of protection 19
Shock and vibration resistance 19
Electromagnetic compatibility (EMC) 19
Overvoltage category 19
Degree of contamination 19

Mechanical construction 20
Design, dimensions 20
Weight 23
Materials 23

Operability 23
Local operation 23
For connecting a configuration tool 24

Certificates and approvals 24
CE mark 24
EAC mark 24
Ex approval 24
UL approval 25
CSA C/US 25
Functional safety 25
HART® certification 25
Marine approvals 25
Test certificate 25
Other standards and guidelines 25

Ordering information 25

Accessories 25
Device-specific accessories 26
Communication-specific accessories 26
Service-specific accessories 27
System components 28

Documentation 28

Function and system design

Measuring principle

Electronic recording and conversion of various input signals in industrial temperature measurement.

Measuring system

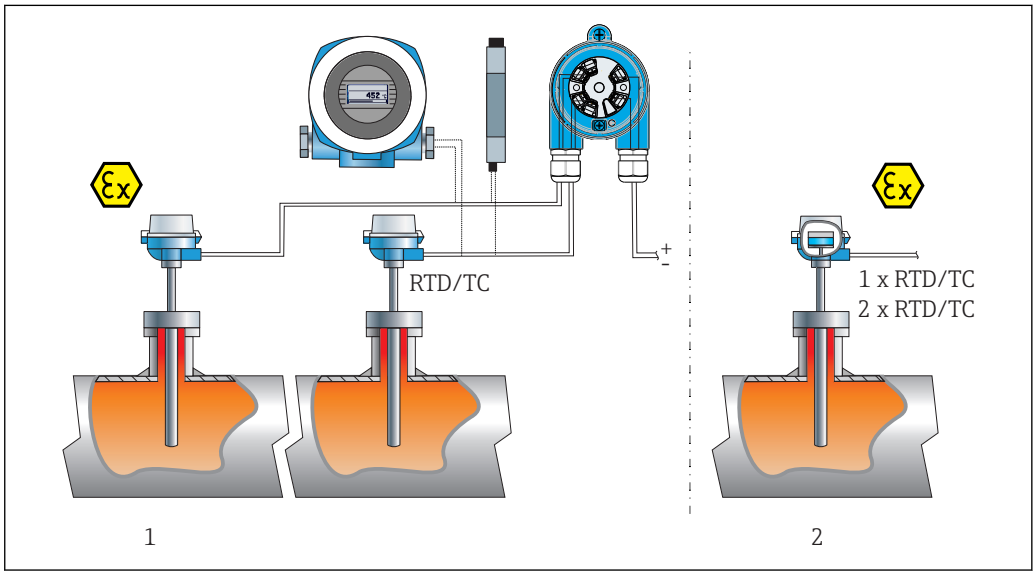

1 *Application examples*

1 *Two sensors with measuring input (RTD or TC) in remote installation with the following advantages: drift warning, sensor backup function and temperature-dependent sensor switching*
2 *Integrated transmitter - 1 x RTD/TC or 2 x RTD/TC for redundancy*

Endress+Hauser offers a comprehensive range of industrial thermometers with resistance sensors or thermocouples.

When combined with the temperature transmitter, these components form a complete measuring point for a wide range of applications in the industrial sector.

The temperature transmitter is a 2-wire device with two measuring inputs and one analog output. The device not only transfers converted signals from resistance thermometers and thermocouples, it also transfers resistance and voltage signals using HART® communication and as a 4 to 20 mA current signal. It can be installed as an intrinsically safe apparatus in hazardous areas. It is used for instrumentation in the terminal head (flat face) as per DIN EN 50446, as a DIN rail device for installation in the control cabinet on a TH35 mounting rail as per EN 60715 or mounted in a 2-chamber field mount housing with glass window and included plug-on display.

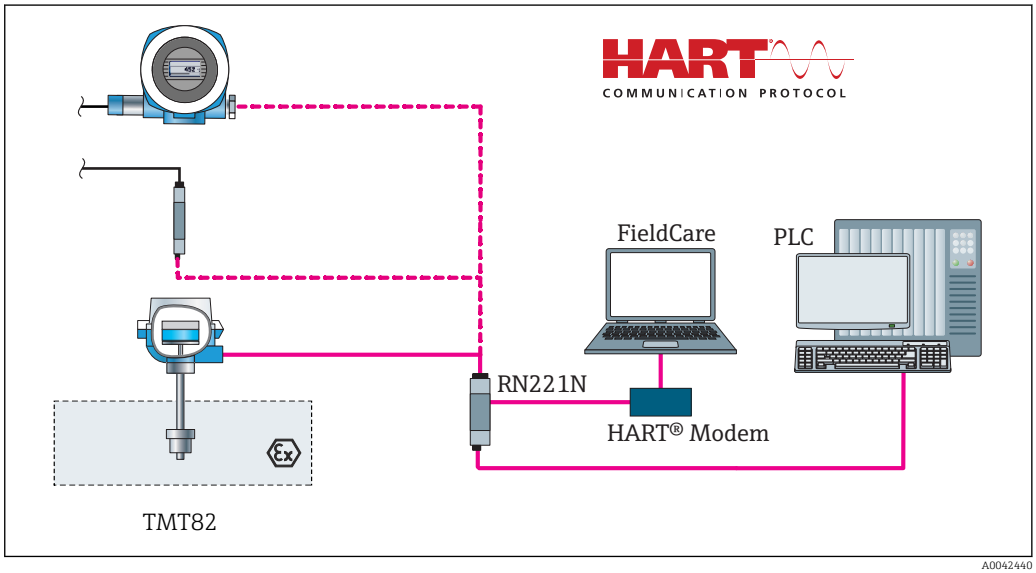

2 *Device architecture for HART® communication*

Standard diagnostic functions

- Cable open-circuit, short-circuit of sensor wires
- Incorrect wiring
- Internal device errors
- Overrange/underrange detection
- Ambient temperature out-of-range detection

Corrosion detection as per NAMUR NE89

Corrosion of the sensor connection cables can cause incorrect measured value readings. The transmitter offers the possibility of detecting any corrosion of the thermocouples, voltage transmitters (mV) and resistance thermometers, resistance transmitters (Ohm) with 4-wire connection before a measured value is corrupted. The transmitter prevents incorrect measured values from being exported and can issue a warning via the HART® protocol if conductor resistance values exceed plausible limits.

Low voltage detection

The low voltage detection function prevents the device from continuously transmitting an incorrect analog output value (caused by an incorrect or damaged power supply system or a damaged signal cable). If the supply voltage drops below the required value, the analog output value drops to < 3.6 mA for approx. 5 s. The device then tries to output the normal analog output value again. If the supply voltage is still too low, this process is repeated cyclically.

2-channel functions

These functions increase the reliability and availability of the process values:
- Sensor backup switches to the second sensor if the primary sensor fails
- Drift warning or alarm if the deviation between sensor 1 and sensor 2 is less than or greater than a predefined limit value
- Temperature-dependent switching between sensors which are used in different measuring ranges
- Mean value or differential measurement from two sensors
- Mean value measurement with sensor redundancy

Not all modes are available in the SIL mode, see the 'Functional Safety Manual'.

Functional Safety Manual for temperature transmitter TMT82: SD01172T/09/en

Input

Measured variable

Temperature (temperature-linear transmission behavior), resistance and voltage.

Measuring range

It is possible to connect two sensors that are independent of one another [1]. The measuring inputs are not galvanically isolated from each other.

Resistance thermometer (RTD) as per standard	Description	α	Measuring range limits	Min. span
IEC 60751:2008	Pt100 (1) Pt200 (2) Pt500 (3) Pt1000 (4)	0.003851	−200 to +850 °C (−328 to +1 562 °F) −200 to +850 °C (−328 to +1 562 °F) −200 to +500 °C (−328 to +932 °F) −200 to +250 °C (−328 to +482 °F)	10 K (18 °F)
JIS C1604:1984	Pt100 (5)	0.003916	−200 to +510 °C (−328 to +950 °F)	10 K (18 °F)
DIN 43760 IPTS-68	Ni100 (6) Ni120 (7)	0.006180	−60 to +250 °C (−76 to +482 °F) −60 to +250 °C (−76 to +482 °F)	10 K (18 °F)
GOST 6651-94	Pt50 (8) Pt100 (9)	0.003910	−185 to +1 100 °C (−301 to +2 012 °F) −200 to +850 °C (−328 to +1 562 °F)	10 K (18 °F)

1) In the case of 2-channel measurement the same measuring unit must be configured for the two channels (e.g. both °C or F or K). Independent 2-channel measurement of a resistance transmitter (Ohm) and voltage transmitter (mV) is not possible.

Resistance thermometer (RTD) as per standard	Description	α	Measuring range limits	Min. span
OIML R84: 2003, GOST 6651-2009	Cu50 (10) Cu100 (11)	0.004280	−180 to +200 °C (−292 to +392 °F) −180 to +200 °C (−292 to +392 °F)	10 K (18 °F)
	Ni100 (12) Ni120 (13)	0.006170	−60 to +180 °C (−76 to +356 °F) −60 to +180 °C (−76 to +356 °F)	10 K (18 °F)
OIML R84: 2003, GOST 6651-94	Cu50 (14)	0.004260	−50 to +200 °C (−58 to +392 °F)	10 K (18 °F)
-	Pt100 (Callendar van Dusen) Nickel polynomial Copper polynomial	-	The measuring range limits are specified by entering the limit values that depend on the coefficients A to C and R0.	10 K (18 °F)
	▪ Connection type: 2-wire, 3-wire or 4-wire connection, sensor current: ≤ 0.3 mA ▪ With 2-wire circuit, compensation of the wire resistance is possible (0 to 30 Ω) ▪ With 3-wire and 4-wire connection, sensor wire resistance up to max. 50 Ω per wire			
Resistance transmitter	Resistance Ω		10 to 400 Ω 10 to 2 000 Ω	10 Ω 10 Ω

Thermocouples as per standard	Description	Measuring range limits		Min. span
IEC 60584, Part 1 ASTM E230-3	Type A (W5Re-W20Re) (30) Type B (PtRh30-PtRh6) (31) Type E (NiCr-CuNi) (34) Type J (Fe-CuNi) (35) Type K (NiCr-Ni) (36) Type N (NiCrSi-NiSi) (37) Type R (PtRh13-Pt) (38) Type S (PtRh10-Pt) (39) Type T (Cu-CuNi) (40)	0 to +2 500 °C (+32 to +4 532 °F) +40 to +1 820 °C (+104 to +3 308 °F) −250 to +1 000 °C (−418 to +1 832 °F) −210 to +1 200 °C (−346 to +2 192 °F) −270 to +1 372 °C (−454 to +2 501 °F) −270 to +1 300 °C (−454 to +2 372 °F) −50 to +1 768 °C (−58 to +3 214 °F) −50 to +1 768 °C (−58 to +3 214 °F) −200 to +400 °C (−328 to +752 °F)	Recommended temperature range: 0 to +2 500 °C (+32 to +4 532 °F) +500 to +1 820 °C (+932 to +3 308 °F) −150 to +1 000 °C (−238 to +1 832 °F) −150 to +1 200 °C (−238 to +2 192 °F) −150 to +1 200 °C (−238 to +2 192 °F) −150 to +1 300 °C (−238 to +2 372 °F) +50 to +1 768 °C (+122 to +3 214 °F) +50 to +1 768 °C (+122 to +3 214 °F) −150 to +400 °C (−238 to +752 °F)	50 K (90 °F) 50 K (90 °F) 50 K (90 °F) 50 K (90 °F) 50 K (90 °F) 50 K (90 °F) 50 K (90 °F) 50 K (90 °F) 50 K (90 °F)
IEC 60584, Part 1 ASTM E230-3 ASTM E988-96	Type C (W5Re-W26Re) (32)	0 to +2 315 °C (+32 to +4 199 °F)	0 to +2 000 °C (+32 to +3 632 °F)	50 K (90 °F)
ASTM E988-96	Type D (W3Re-W25Re) (33)	0 to +2 315 °C (+32 to +4 199 °F)	0 to +2 000 °C (+32 to +3 632 °F)	50 K (90 °F)
DIN 43710	Type L (Fe-CuNi) (41) Type U (Cu-CuNi) (42)	−200 to +900 °C (−328 to +1 652 °F) −200 to +600 °C (−328 to +1 112 °F)	−150 to +900 °C (−238 to +1 652 °F) −150 to +600 °C (−238 to +1 112 °F)	50 K (90 °F)
GOST R8.585-2001	Type L (NiCr-CuNi) (43)	−200 to +800 °C (−328 to +1 472 °F)	−200 to +800 °C (+328 to +1 472 °F)	50 K (90 °F)
	▪ Internal reference junction (Pt100) ▪ External reference junction: configurable value −40 to +85 °C (−40 to +185 °F) ▪ Maximum sensor wire resistance 10 kΩ (If the sensor wire resistance is greater than 10 kΩ, an error message is output in accordance with NAMUR NE89.)			
Voltage transmitter (mV)	Millivolt transmitter (mV)	−20 to 100 mV		5 mV

Type of input

The following connection combinations are possible when both sensor inputs are assigned:

		Sensor input 1			
		RTD or resistance transmitter, 2-wire	RTD or resistance transmitter, 3-wire	RTD or resistance transmitter, 4-wire	Thermocouple (TC), voltage transmitter
Sensor input 2	RTD or resistance transmitter, 2-wire	☑	☑	-	☑
	RTD or resistance transmitter, 3-wire	☑	☑	-	☑
	RTD or resistance transmitter, 4-wire	-	-	-	-

		Sensor input 1			
	Thermocouple (TC), voltage transmitter	☑	☑	☑	☑
	For field mount housing with sensor input 1 thermocouple: It is not possible to connect a second thermocouple (TC), RTD, resistance transmitter or voltage transmitter on sensor input 2 as this input is needed for the external reference junction.				

Output

Output signal

Analog output	4 to 20 mA, 20 to 4 mA (can be inverted)
Signal encoding	FSK ±0.5 mA via current signal
Data transmission rate	1200 baud
Galvanic isolation	U = 2 kV AC for 1 minute (input/output)

Failure information

Failure information as per NAMUR NE43:

Failure information is created if the measuring information is missing or not valid. A complete list of all the errors occurring in the measuring system is created.

Underranging	Linear decrease from 4.0 to 3.8 mA
Overranging	Linear increase from 20.0 to 20.5 mA
Failure e.g. sensor failure; sensor short-circuit	≤ 3.6 mA ("low") or ≥ 21 mA ("high"), can be selected The "high" alarm setting can be set between 21.5 mA and 23 mA, thus providing the flexibility needed to meet the requirements of various control systems.

Load

$R_{b\ max.}$ = ($U_{b\ max.}$ - 11 V) / 0.023 A (current output). Valid for head transmitter

Load in Ohm
U_b = supply voltage in V DC

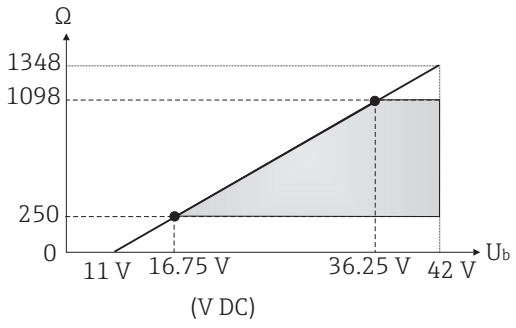

Linearization/transmission behavior

Temperature-linear, resistance-linear, voltage-linear

Mains filter

50/60 Hz

Filter

1st order digital filter: 0 to 120 s

Protocol-specific data

HART® version	7
Device address in the multi-drop mode [1]	Software setting addresses 0 to 63
Device description files (DD)	Information and files are available free of charge at: www.endress.com www.hartcomm.org
Load (communication resistor)	min. 250 Ω

1) Not possible in the SIL mode, see Functional Safety Manual SD01172T/09

Write protection for device parameters

- Hardware: Write protection for head transmitter on optional display using DIP switch
- Software: Write protection using password

Switch-on delay

- Until the start of HART® communication, approx. 6 s [2], while switch-on delay = I_a ≤3.8 mA
- Until the first valid measured value signal is present for HART® communication and at the current output, approx. 15 s, while switch-on delay = I_a ≤ 3.8 mA

Power supply

Supply voltage

Values for non-hazardous areas, protected against polarity reversal:

- Head transmitter
  - 11 V ≤ Vcc ≤ 42 V (standard)
  - 11 V ≤ Vcc ≤ 32 V (SIL mode)
  - I: ≤ 23 mA
- DIN rail device
  - 12 V ≤ Vcc ≤ 42 V (standard)
  - 12 V ≤ Vcc ≤ 32 V (SIL mode)
  - I: ≤ 23 mA

Values for hazardous area, see Ex documentation.

Current consumption

- 3.6 to 23 mA
- Minimum current consumption 3.5 mA, Multidrop mode 4 mA (not possible in SIL mode)
- Current limit ≤ 23 mA

Electrical connection

Head transmitter

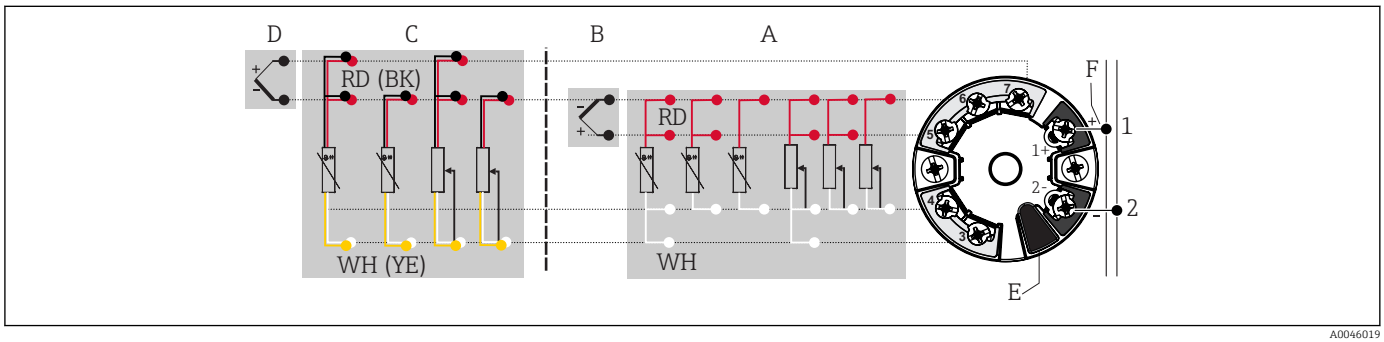

3 Assignment of terminal connections for head transmitter

A Sensor input 1, RTD and Ω, 4-, 3- and 2-wire
B Sensor input 1, TC and mV
C Sensor input 2, RTD and Ω, 3- and 2-wire
D Sensor input 2, TC and mV
E Display connection, service interface
F Bus terminator and power supply

2) Does not apply to the SIL mode

DIN rail device

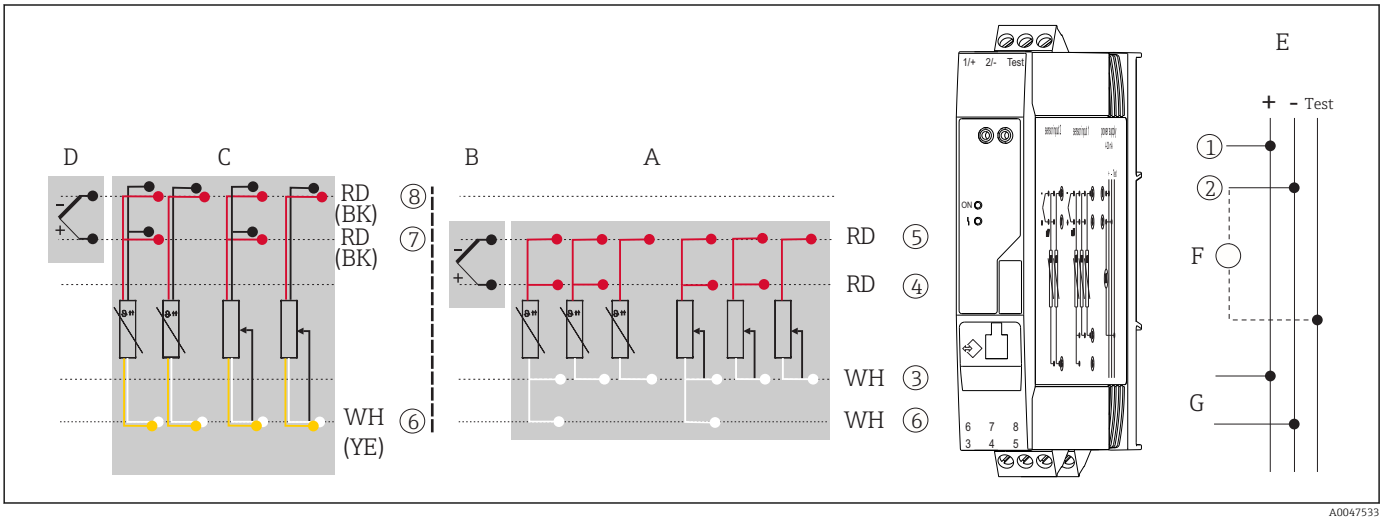

4 *Assignment of terminal connections for DIN rail device*

A Sensor input 1, RTD and Ω, 4-, 3- and 2-wire
B Sensor input 1, TC and mV
C Sensor input 2, RTD and Ω, 3- and 2-wire
D Sensor input 2, TC and mV
E Power supply 4 to 20 mA
F To check the output current, an ammeter (DC measurement) can be connected between the "Test" and "-" terminals.
G HART® connection

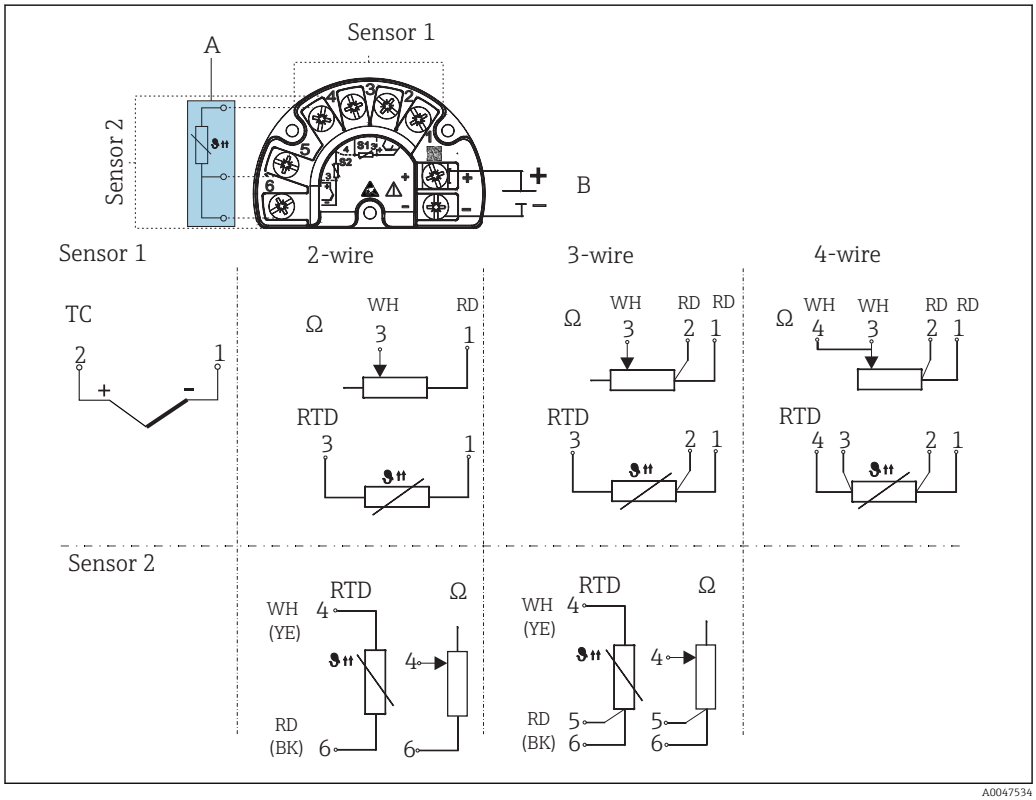

5 *Terminal assignment of the field mount housing with separate terminal compartment*

A Fixed connection of the external reference junction, terminals 4, 5 and 6 (Pt100, IEC 60751, class B, 3-wire). It is not possible to connect a second thermocouple (TC) on sensor 2.
B Bus terminator and power supply

For a head transmitter in the field mount housing with separate terminal compartment and for the DIN rail version, a shielded cable must be used for sensor cable lengths of 30 m (98.4 ft) or more. The use of shielded sensor cables is generally recommended.

To operate the device via the HART® protocol (terminals 1 and 2), a minimum load of 250 Ω is required in the signal circuit.

Terminal

Choice of screw terminals or push-in terminals for sensor and power supply cables:

Terminal design	Cable design	Cable cross-section
Screw terminals	Rigid or flexible	≤ 2.5 mm² (14 AWG)
		Field mount housing: 2.5 mm² (12 AWG) plus ferrule
Push-in terminals (cable version, stripping length = min. 10 mm (0.39 in)	Rigid or flexible	0.2 to 1.5 mm² (24 to 16 AWG)
	Flexible with wire end ferrules with/without plastic ferrule	0.25 to 1.5 mm² (24 to 16 AWG)

Ferrules must be used with push-in terminals and when using flexible cables with a cable cross-section of ≤ 0.3 mm². Otherwise, the use of ferrules when connecting flexible cables to push-in terminals is not recommended.

Performance characteristics

Response time

The measured value update depends on the type of sensor and connection method and moves within the following ranges:

Resistance thermometer (RTD)	0.9 to 1.5 s (depends on the connection method 2/3/4-wire)
Thermocouples (TC)	1.1 s
Reference temperature	1.1 s

When recording step responses, it must be taken into account that the times for the measurement of the second channel and the internal reference measuring point are added to the specified times where applicable.

Update time

Approx. 100 ms

Reference operating conditions

- Calibration temperature: +25 °C ±3 K (77 °F ±5.4 °F)
- Supply voltage: 24 V DC
- 4-wire circuit for resistance adjustment

Maximum measured error

In accordance with DIN EN 60770 and the reference conditions specified above. The measured error data correspond to ±2 σ (Gaussian distribution). The data include non-linearities and repeatability.

Typical

Standard	Description	Measuring range	Typical measured error (±)	
Resistance thermometer (RTD) as per standard			Digital value [1]	Value at current output
IEC 60751:2008	Pt100 (1)	0 to +200 °C (32 to +392 °F)	0.08 °C (0.14 °F)	0.1 °C (0.18 °F)
IEC 60751:2008	Pt1000 (4)		0.08 K (0.14 °F)	0.1 °C (0.18 °F)
GOST 6651-94	Pt100 (9)		0.07 °C (0.13 °F)	0.09 °C (0.16 °F)
Thermocouples (TC) as per standard			Digital value	Value at current output

Standard	Description	Measuring range	Typical measured error (±)	
IEC 60584, Part 1 ASTM E230-3	Type K (NiCr-Ni) (36)	0 to +800 °C (32 to +1 472 °F)	0.31 °C (0.56 °F)	0.39 °C (0.7 °F)
IEC 60584, Part 1 ASTM E230-3	Type S (PtRh10-Pt) (39)		0.97 °C (1.75 °F)	1.0 °C (1.8 °F)
GOST R8.585-2001	Type L (NiCr-CuNi) (43)		2.18 °C (3.92 °F)	2.2 °C (3.96 °F)

1) Measured value transmitted via HART®.

Measured error for resistance thermometers (RTD) and resistance transmitters

Standard	Description	Measuring range	Measured error (±)	
			Digital [1]	D/A [2]
			Based on measured value [3]	
IEC 60751:2008	Pt100 (1)	−200 to +850 °C (−328 to +1 562 °F)	ME = ± (0.06 °C (0.11 °F) + 0.006% * (MV - LRV))	0.03 % (≙ 4.8 µA)
	Pt200 (2)		ME = ± (0.12 °C (0.22 °F) + 0.015% * (MV - LRV))	
	Pt500 (3)	−200 to +500 °C (−328 to +932 °F)	ME = ± (0.05 °C (0.09 °F) + 0.014% * (MV - LRV))	
	Pt1000 (4)	−200 to +250 °C (−328 to +482 °F)	ME = ± (0.03 °C (0.05 °F) + 0.013% * (MV - LRV))	
JIS C1604:1984	Pt100 (5)	−200 to +510 °C (−328 to +950 °F)	ME = ± (0.05 °C (0.09 °F) + 0.006% * (MV - LRV))	
GOST 6651-94	Pt50 (8)	−185 to +1 100 °C (−301 to +2 012 °F)	ME = ± (0.10 °C (0.18 °F) + 0.008% * (MV - LRV))	
	Pt100 (9)	−200 to +850 °C (−328 to +1 562 °F)	ME = ± (0.05 °C (0.09 °F) + 0.006% * (MV - LRV))	
DIN 43760 IPTS-68	Ni100 (6)	−60 to +250 °C (−76 to +482 °F)	ME = ± (0.05 °C (0.09 °F) - 0.006% * (MV - LRV))	
	Ni120 (7)			
OIML R84: 2003 / GOST 6651-2009	Cu50 (10)	−180 to +200 °C (−292 to +392 °F)	ME = ± (0.10 °C (0.18 °F) + 0.006% * (MV - LRV))	
	Cu100 (11)	−180 to +200 °C (−292 to +392 °F)	ME = ± (0.05 °C (0.09 °F) + 0.003% * (MV - LRV))	
	Ni100 (12)	−60 to +180 °C (−76 to +356 °F)	ME = ± (0.06 °C (0.11 °F) - 0.006% * (MV - LRV))	
	Ni120 (13)		ME = ± (0.05 °C (0.09 °F) - 0.006% * (MV - LRV))	
OIML R84: 2003, GOST 6651-94	Cu50 (14)	−50 to +200 °C (−58 to +392 °F)	ME = ± (0.10 °C (0.18 °F) + 0.004% * (MV - LRV))	
Resistance transmitter	Resistance Ω	10 to 400 Ω	ME = ± 21 mΩ + 0.003% * MV	0.03 % (≙ 4.8 µA)
		10 to 2 000 Ω	ME = ± 90 mΩ + 0.011% * MV	

1) Measured value transmitted via HART®.
2) Percentages based on the configured span of the analog output signal.
3) Deviations from maximum measured error due to rounding is possible.

Measured error for thermocouples (TC) and voltage transmitters

Standard	Description	Measuring range	Measured error (±)	
			Digital [1]	D/A [2]
			Based on measured value [3]	
IEC 60584-1 ASTM E230-3	Type A (30)	0 to +2 500 °C (+32 to +4 532 °F)	ME = ± (0.8 °C (1.52 °F) + 0.021% * (MV - LRV))	0.03 % (≙ 4.8 µA)
	Type B (31)	+500 to +1 820 °C (+932 to +3 308 °F)	ME = ± (1.43 °C (2.57 °F) - 0.06% * (MV - LRV))	
IEC 60584-1 ASTM E230-3 ASTM E988-96	Type C (32)	0 to +2 000 °C (+32 to +3 632 °F)	ME = ± (0.55 °C (0.99 °F) + 0.0055% * (MV - LRV))	
ASTM E988-96	Type D (33)	0 to +2 000 °C (+32 to +3 632 °F)	ME = ± (0.85 °C (1.53 °F) - 0.008% * (MV - LRV))	

Standard	Description	Measuring range	Measured error (±)	
IEC 60584-1 ASTM E230-3	Type E (34)	−150 to +1 200 °C (−238 to +2 192 °F)	ME = ± (0.22 °C (0.40 °F) - 0.006% * (MV - LRV))	
	Type J (35)	−150 to +1 200 °C (−238 to +2 192 °F)	ME = ± (0.27 °C (0.49 °F) - 0.005% * (MV - LRV))	
	Type K (36)		ME = ± (0.35 °C (0.63 °F) - 0.005% * (MV - LRV))	
	Type N (37)	−150 to +1 300 °C (−238 to +2 372 °F)	ME = ± (0.48 °C (0.86 °F) - 0.014% * (MV - LRV))	
	Type R (38)	+50 to +1 768 °C (+122 to +3 214 °F)	ME = ± (1.12 °C (2.02 °F) - 0.03% * (MV - LRV))	
	Type S (39)		ME = ± (1.15 °C (2.07 °F) - 0.022% * (MV - LRV))	
	Type T (40)	−150 to +400 °C (−238 to +752 °F)	ME = ± (0.35 °C (0.63 °F) - 0.04% * (MV - LRV))	
DIN 43710	Type L (41)	−150 to +900 °C (−238 to +1 652 °F)	ME = ± (0.29 °C (0.52 °F) - 0.009% * (MV - LRV))	
	Type U (42)	−150 to +600 °C (−238 to +1 112 °F)	ME = ± (0.33 °C (0.59 °F) - 0.028% * (MV - LRV))	
GOST R8.585-2001	Type L (43)	−200 to +800 °C (−328 to +1 472 °F)	ME = ± (2.2 °C (3.96 °F) - 0.015% * (MV - LRV))	
Voltage transmitter (mV)		−20 to +100 mV	ME = ± (7.7 µV + 0.0025% * (MV - LRV))	4.8 µA

1) Measured value transmitted via HART®.
2) Percentages based on the configured span of the analog output signal.
3) Deviations from maximum measured error due to rounding is possible.

MV = Measured Value

LRV = Lower Range Value of relevant sensor

Total measured error of transmitter at current output = √(Measured error digital² + Measured error D/A²)

Sample calculation with Pt100, measuring range 0 to +200 °C (+32 to +392 °F), ambient temperature +25 °C (+77 °F), supply voltage 24 V:

Measured error digital = 0.06 °C + 0.006% x (200 °C - (-200 °C)):	0.08 °C (0.15 °F)
Measured error D/A = 0.03 % x 200 °C (360 °F)	0.06 °C (0.11 °F)
Measured error digital value (HART):	0.08 °C (0.15 °F)
Measured error analog value (current output): √(Measured error digital² + Measured error D/A²)	0.10 °C (0.19 °F)

Sample calculation with Pt100, measuring range 0 to +200 °C (+32 to +392 °F), ambient temperature +35 °C (+95 °F), supply voltage 30 V:

Measured error digital = 0.06 °C + 0.006% x (200 °C - (-200 °C)):	0.08 °C (0.15 °F)
Measured error D/A = 0.03 % x 200 °C (360 °F)	0.06 °C (0.11 °F)
Influence of ambient temperature (digital) = (35 - 25) x (0.002% x 200 °C - (-200 °C)), min. 0.005 °C	0.08 °C (0.14 °F)
Influence of ambient temperature (D/A) = (35 - 25) x (0.001% x 200 °C)	0.02 °C (0.04 °F)
Influence of supply voltage (digital) = (30 - 24) x (0.002% x 200 °C - (-200 °C)), min. 0.005 °C	0.05 °C (0.09 °F)
Influence of supply voltage (D/A) = (30 - 24) x (0.001% x 200 °C)	0.01 °C (0.02 °F)

Measured error digital value (HART): √(Measured error digital² + Influence of ambient temperature (digital)² + Influence of supply voltage (digital)²	**0.13 °C (0.23 °F)**
Measured error analog value (current output): √(Measured error digital² + Measured error D/A² + Influence of ambient temperature (digital)² + Influence of ambient temperature (D/A)² + Influence of supply voltage (digital)² + Influence of supply voltage (D/A)²	**0.14 °C (0.25 °F)**

The measured error data correspond to ±2 σ (Gaussian distribution).

MV = Measured Value

LRV = Lower Range Value of relevant sensor

Physical input measuring range of sensors	
10 to 400 Ω	Cu50, Cu100, polynomial RTD, Pt50, Pt100, Ni100, Ni120
10 to 2 000 Ω	Pt200, Pt500, Pt1000
–20 to 100 mV	Thermocouples type: A, B, C, D, E, J, K, L, N, R, S, T, U

Other measured errors apply in SIL mode.

For more information please refer to the Functional Safety Manual SD01172T/09.

Sensor adjustment

Sensor transmitter matching

RTD sensors are one of the most linear temperature measuring elements. Nevertheless, the output must be linearized. To significantly improve temperature measurement accuracy, the device allows the use of two methods:

- Callendar-Van-Dusen coefficients (Pt100 resistance thermometer)
  The Callendar-Van-Dusen equation is described as:
  $R_T = R_0[1+AT+BT^2+C(T-100)T^3]$

  The coefficients A, B and C are used to match the sensor (platinum) and transmitter in order to improve the accuracy of the measuring system. The coefficients for a standard sensor are specified in IEC 751. If no standard sensor is available or if greater accuracy is required, the coefficients for each sensor can be determined specifically with the aid of sensor calibration.

- Linearization for copper/nickel resistance thermometers (RTD)
  The polynomial equation for copper/nickel is as follows:
  $R_T = R_0(1+AT+BT^2)$

  The coefficients A and B are used for the linearization of nickel or copper resistance thermometers (RTD). The exact values of the coefficients derive from the calibration data and are specific to each sensor. The sensor-specific coefficients are then sent to the transmitter.

Sensor transmitter matching using one of the methods explained above significantly improves the temperature measurement accuracy of the entire system. This is because the transmitter uses the specific data pertaining to the connected sensor to calculate the measured temperature, instead of using the standardized sensor curve data.

1-point adjustment (offset)

Shifts the sensor value

2-point adjustment (sensor trimming)

Correction (slope and offset) of the measured sensor value at transmitter input

Current output adjustment

Correction of 4 or 20 mA current output value (not possible in SIL mode)

Operating influences The measured error data correspond to ±2 σ (Gaussian distribution).

Influence of ambient temperature and supply voltage on operation for resistance thermometers (RTD) and resistance transmitters

Description	Standard	Ambient temperature: Influence (±) per 1 °C (1.8 °F) change			Supply voltage: Influence (±) per V change		
		Digital [1]		D/A [2]	Digital		D/A
		Maximum	Based on measured value		Maximum	Based on measured value	
Pt100 (1)	IEC 60751:2008	≤ 0.02 °C (0.036 °F)	0.002% * (MV -LRV), at least 0.005 °C (0.009 °F)	0.001 %	≤ 0.02 °C (0.036 °F)	0.002% * (MV -LRV), at least 0.005 °C (0.009 °F)	0.001 %
Pt200 (2)		≤ 0.026 °C (0.047 °F)	-		≤ 0.026 °C (0.047 °F)	-	
Pt500 (3)		≤ 0.014 °C (0.025 °F)	0.002% * (MV -LRV), at least 0.009 °C (0.016 °F)		≤ 0.014 °C (0.025 °F)	0.002% * (MV -LRV), at least 0.009 °C (0.016 °F)	
Pt1000 (4)		≤ 0.01 °C (0.018 °F)	0.002% * (MV -LRV), at least 0.004 °C (0.007 °F)		≤ 0.01 °C (0.018 °F)	0.002% * (MV -LRV), at least 0.004 °C (0.007 °F)	
Pt100 (5)	JIS C1604:1984		0.002% * (MV -LRV), at least 0.005 °C (0.009 °F)			0.002% * (MV -LRV), at least 0.005 °C (0.009 °F)	
Pt50 (8)	GOST 6651-94	≤ 0.03 °C (0.054 °F)	0.002% * (MV -LRV), at least 0.01 °C (0.018 °F)		≤ 0.03 °C (0.054 °F)	0.002% * (MV -LRV), at least 0.01 °C (0.018 °F)	
Pt100 (9)		≤ 0.02 °C (0.036 °F)	0.002% * (MV -LRV), at least 0.005 °C (0.009 °F)		≤ 0.02 °C (0.036 °F)	0.002% * (MV -LRV), at least 0.005 °C (0.009 °F)	
Ni100 (6)	DIN 43760 IPTS-68	≤ 0.005 °C (0.009 °F)	-		≤ 0.005 °C (0.009 °F)	-	
Ni120 (7)			-			-	
Cu50 (10)	OIML R84: 2003 / GOST 6651-2009	≤ 0.008 °C (0.014 °F)	-		≤ 0.008 °C (0.014 °F)	-	
Cu100 (11)			0.002% * (MV -LRV), at least 0.004 °C (0.007 °F)			0.002% * (MV -LRV), at least 0.004 °C (0.007 °F)	
Ni100 (12)		≤ 0.004 °C (0.007 °F)	-		≤ 0.004 °C (0.007 °F)	-	
Ni120 (13)			-			-	
Cu50 (14)	OIML R84: 2003 / GOST 6651-94	≤ 0.008 °C (0.014 °F)	-		≤ 0.008 °C (0.014 °F)	-	
Resistance transmitter (Ω)							
10 to 400 Ω		≤ 6 mΩ	0.0015% * (MV -LRV), at least 1.5 mΩ	0.001 %	≤ 6 mΩ	0.0015% * (MV -LRV), at least 1.5 mΩ	0.001 %
10 to 2 000 Ω		≤ 30 mΩ	0.0015% * (MV -LRV), at least 15 mΩ		≤ 30 mΩ	0.0015% * (MV -LRV), at least 15 mΩ	

1) Measured value transmitted via HART®.
2) Percentages based on the configured span of the analog output signal

Influence of ambient temperature and supply voltage on operation for thermocouples (TC) and voltage transmitters

Description	Standard	Ambient temperature: Influence (±) per 1 °C (1.8 °F) change			Supply voltage: Influence (±) per V change		
		Digital [1]		D/A [2]	Digital		D/A
		Maximum	Based on measured value		Maximum	Based on measured value	
Type A (30)	IEC 60584-1 ASTM E230-3	≤ 0.14 °C (0.25 °F)	0.0055% * (MV -LRV), at least 0.03 °C (0.054 °F)	0.001 %	≤ 0.14 °C (0.25 °F)	0.0055% * (MV -LRV), at least 0.03 °C (0.054 °F)	0.001 %
Type B (31)		≤ 0.06 °C (0.11 °F)	-		≤ 0.06 °C (0.11 °F)	-	
Type C (32)	IEC 60584-1 ASTM E230-3 ASTM E988-96	≤ 0.09 °C (0.16 °F)	0.0045% * (MV -LRV), at least 0.03 °C (0.054 °F)		≤ 0.09 °C (0.16 °F)	0.0045% * (MV -LRV), at least 0.03 °C (0.054 °F)	

Description	Standard	Ambient temperature: Influence (±) per 1 °C (1.8 °F) change			Supply voltage: Influence (±) per V change		
Type D (33)	ASTM E988-96	≤ 0.08 °C (0.14 °F)	0.004% * (MV -LRV), at least 0.035 °C (0.063 °F)		≤ 0.08 °C (0.14 °F)	0.004% * (MV -LRV), at least 0.035 °C (0.063 °F)	
Type E (34)	IEC 60584-1 ASTM E230-3	≤ 0.03 °C (0.05 °F)	0.003% * (MV -LRV), at least 0.016 °C (0.029 °F)		≤ 0.03 °C (0.05 °F)	0.003% * (MV -LRV), at least 0.016 °C (0.029 °F)	
Type J (35)		≤ 0.02 °C (0.04 °F)	0.0028% * (MV -LRV), at least 0.02 °C (0.036 °F)		≤ 0.02 °C (0.04 °F)	0.0028% * (MV -LRV), at least 0.02 °C (0.036 °F)	
Type K (36)		≤ 0.04 °C (0.07 °F)	0.003% * (MV -LRV), at least 0.013 °C (0.023 °F)		≤ 0.04 °C (0.07 °F)	0.003% * (MV -LRV), at least 0.013 °C (0.023 °F)	
Type N (37)			0.0028% * (MV -LRV), at least 0.020 °C (0.036 °F)			0.0028% * (MV -LRV), at least 0.020 °C (0.036 °F)	
Type R (38)		≤ 0.06 °C (0.11 °F)	0.0035% * (MV -LRV), at least 0.047 °C (0.085 °F)		≤ 0.06 °C (0.11 °F)	0.0035% * (MV -LRV), at least 0.047 °C (0.085 °F)	
Type S (39)		≤ 0.05 °C (0.09 °F)	-		≤ 0.05 °C (0.09 °F)	-	
Type T (40)		≤ 0.01 °C (0.02 °F)	-		≤ 0.01 °C (0.02 °F)	-	
Type L (41)	DIN 43710	≤ 0.02 °C (0.04 °F)	-		≤ 0.02 °C (0.04 °F)	-	
Type U (42)		≤ 0.01 °C (0.02 °F)	-		≤ 0.01 °C (0.02 °F)	-	
Type L (43)	GOST R8.585-2001	≤ 0.01 °C (0.02 °F)	-		≤ 0.01 °C (0.02 °F)	-	
Voltage transmitter (mV)				0.001 %			0.001 %
−20 to 100 mV	-	≤ 3 µV	-		≤ 3 µV	-	

1) Measured value transmitted via HART®.
2) Percentages based on the configured span of the analog output signal

MV = Measured Value

LRV = Lower Range Value of relevant sensor

Total measured error of transmitter at current output = √(Measured error digital² + Measured error D/A²)

Long-term drift, resistance thermometers (RTD) and resistance transmitters

Description	Standard	Long-term drift (±) 1)		
		after 1 year	after 3 years	after 5 years
		Based on measured value		
Pt100 (1)	IEC 60751:2008	≤ 0.016% * (MV - LRV) or 0.04 °C (0.07 °F)	≤ 0.025% * (MV - LRV) or 0.05 °C (0.09 °F)	≤ 0.028% * (MV - LRV) or 0.06 °C (0.10 °F)
Pt200 (2)		0.25 °C (0.44 °F)	0.41 °C (0.73 °F)	0.50 °C (0.91 °F)
Pt500 (3)		≤ 0.018% * (MV - LRV) or 0.08 °C (0.14 °F)	≤ 0.03% * (MV - LRV) or 0.14 °C (0.25 °F)	≤ 0.036% * (MV - LRV) or 0.17 °C (0.31 °F)
Pt1000 (4)		≤ 0.0185% * (MV - LRV) or 0.04 °C (0.07 °F)	≤ 0.031% * (MV - LRV) or 0.07 °C (0.12 °F)	≤ 0.038% * (MV - LRV) or 0.08 °C (0.14 °F)
Pt100 (5)	JIS C1604:1984	≤ 0.015% * (MV - LRV) or 0.04 °C (0.07 °F)	≤ 0.024% * (MV - LRV) or 0.07 °C (0.12 °F)	≤ 0.027% * (MV - LRV) or 0.08 °C (0.14 °F)
Pt50 (8)	GOST 6651-94	≤ 0.017% * (MV - LRV) or 0.07 °C (0.13 °F)	≤ 0.027% * (MV - LRV) or 0.12 °C (0.22 °F)	≤ 0.03% * (MV - LRV) or 0.14 °C (0.25 °F)
Pt100 (9)		≤ 0.016% * (MV - LRV) or 0.04 °C (0.07 °F)	≤ 0.025% * (MV - LRV) or 0.07 °C (0.12 °F)	≤ 0.028% * (MV - LRV) or 0.07 °C (0.13 °F)

Description	Standard	Long-term drift (±) [1]		
Ni100 (6)	DIN 43760 IPTS-68	0.04 °C (0.06 °F)	0.05 °C (0.10 °F)	0.06 °C (0.11 °F)
Ni120 (7)				
Cu50 (10)	OIML R84: 2003 / GOST 6651-2009	0.06 °C (0.10 °F)	0.09 °C (0.16 °F)	0.11 °C (0.20 °F)
Cu100 (11)		≤ 0.015% * (MV - LRV) or 0.04 °C (0.06 °F)	≤ 0.024% * (MV - LRV) or 0.06 °C (0.10 °F)	≤ 0.027% * (MV - LRV) or 0.06 °C (0.11 °F)
Ni100 (12)		0.03 °C (0.06 °F)	0.05 °C (0.09 °F)	0.06 °C (0.10 °F)
Ni120 (13)		0.03 °C (0.06 °F)	0.05 °C (0.09 °F)	0.06 °C (0.10 °F)
Cu50 (14)	OIML R84: 2003 / GOST 6651-94	0.06 °C (0.10 °F)	0.09 °C (0.16 °F)	0.10 °C (0.18 °F)
Resistance transmitter				
10 to 400 Ω		≤ 0.0122% * (MV - LRV) or 12 mΩ	≤ 0.02% * (MV - LRV) or 20 mΩ	≤ 0.022% * (MV - LRV) or 22 mΩ
10 to 2 000 Ω		≤ 0.015% * (MV - LRV) or 144 mΩ	≤ 0.024% * (MV - LRV) or 240 mΩ	≤ 0.03% * (MV - LRV) or 295 mΩ

1) Whichever is greater

Long-term drift, thermocouples (TC) and voltage transmitters

Description	Standard	Long-term drift (±) [1]		
		after 1 year	after 3 years	after 5 years
		Based on measured value		
Type A (30)	IEC 60584-1 ASTM E230-3	≤ 0.048% * (MV - LRV) or 0.46 °C (0.83 °F)	≤ 0.072% * (MV - LRV) or 0.69 °C (1.24 °F)	≤ 0.1% * (MV - LRV) or 0.94 °C (1.69 °F)
Type B (31)		1.08 °C (1.94 °F)	1.63 °C (2.93 °F)	2.23 °C (4.01 °F)
Type C (32)	IEC 60584-1 ASTM E230-3 ASTM E988-96	≤ 0.038% * (MV - LRV) or 0.41 °C (0.74 °F)	≤ 0.057% * (MV - LRV) or 0.62 °C (1.12 °F)	≤ 0.078% * (MV - LRV) or 0.85 °C (1.53 °F)
Type D (33)	ASTM E988-96	≤ 0.035% * (MV - LRV) or 0.57 °C (1.03 °F)	≤ 0.052% * (MV - LRV) or 0.86 °C (1.55 °F)	≤ 0.071% * (MV - LRV) or 1.17 °C (2.11 °F)
Type E (34)	IEC 60584-1 ASTM E230-3	≤ 0.024% * (MV - LRV) or 0.15 °C (0.27 °F)	≤ 0.037% * (MV - LRV) or 0.23 °C (0.41 °F)	≤ 0.05% * (MV - LRV) or 0.31 °C (0.56 °F)
Type J (35)		≤ 0.025% * (MV - LRV) or 0.17 °C (0.31 °F)	≤ 0.037% * (MV - LRV) or 0.25 °C (0.45 °F)	≤ 0.051% * (MV - LRV) or 0.34 °C (0.61 °F)
Type K (36)		≤ 0.027% * (MV - LRV) or 0.23 °C (0.41 °F)	≤ 0.041% * (MV - LRV) or 0.35 °C (0.63 °F)	≤ 0.056% * (MV - LRV) or 0.48 °C (0.86 °F)
Type N (37)		0.36 °C (0.65 °F)	0.55 °C (0.99 °F)	0.75 °C (1.35 °F)
Type R (38)		0.83 °C (1.49 °F)	1.26 °C (2.27 °F)	1.72 °C (3.10 °F)
Type S (39)		0.84 °C (1.51 °F)	1.27 °C (2.29 °F)	1.73 °C (3.11 °F)
Type T (40)		0.25 °C (0.45 °F)	0.37 °C (0.67 °F)	0.51 °C (0.92 °F)
Type L (41)	DIN 43710	0.20 °C (0.36 °F)	0.31 °C (0.56 °F)	0.42 °C (0.76 °F)
Type U (42)		0.24 °C (0.43 °F)	0.37 °C (0.67 °F)	0.50 °C (0.90 °F)
Type L (43)	GOST R8.585-2001	0.22 °C (0.40 °F)	0.33 °C (0.59 °F)	0.45 °C (0.81 °F)
Voltage transmitter (mV)				
−20 to 100 mV		≤ 0.027% * (MV - LRV) or 5.5 µV	≤ 0.041% * (MV - LRV) or 8.2 µV	≤ 0.056% * (MV - LRV) or 11.2 µV

1) Whichever is greater

Long-term drift analog output

Long term drift D/A [1] (±)		
after 1 year	after 3 years	after 5 years
0.021%	0.029%	0.031%

1) Percentages based on the configured span of the analog output signal.

Influence of reference junction

- Pt100 DIN IEC 60751 Cl. B (internal cold junction with thermocouples TC)
- Field mount housing with separate terminal compartment: Pt100 DIN IEC 60751 Cl. B (external cold junction with thermocouples TC)

Installation

Mounting location

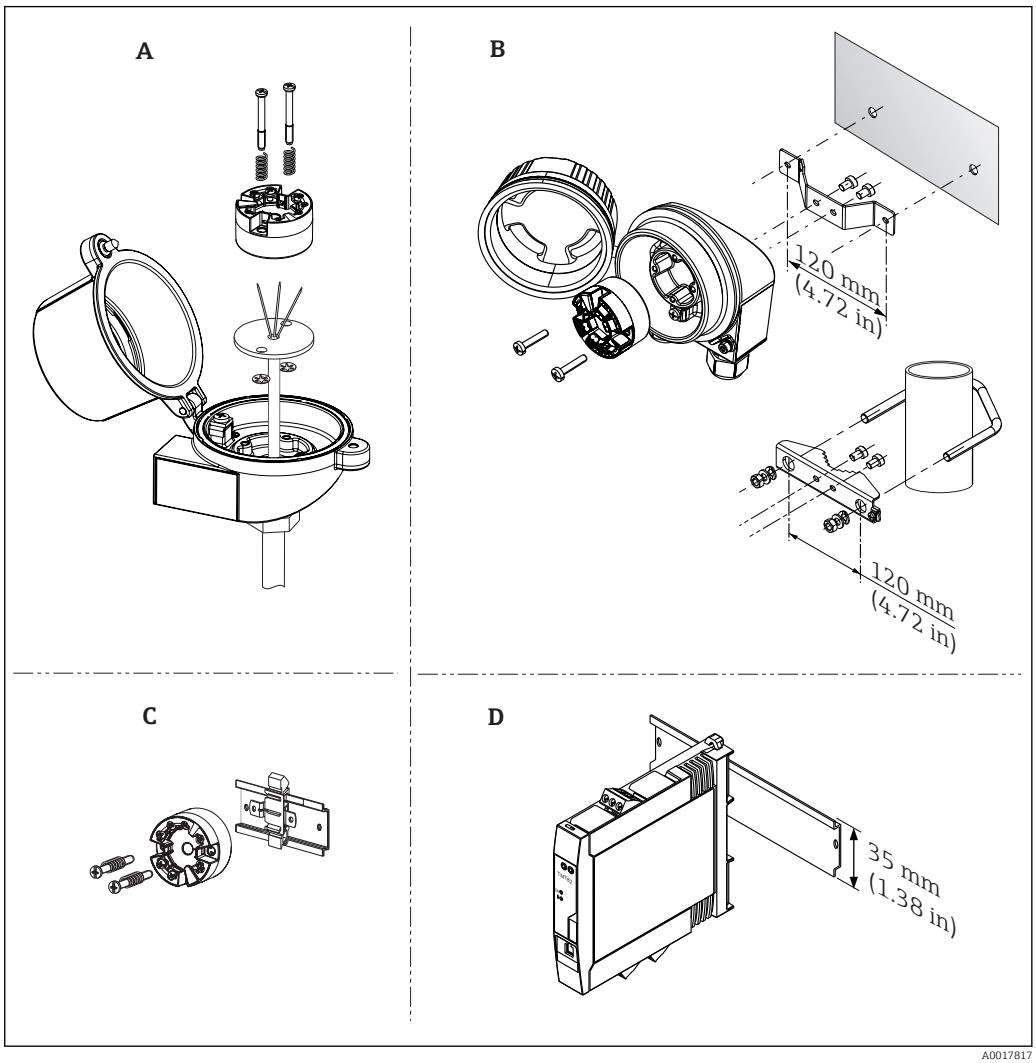

6 *Mounting location options for the transmitter*

A Terminal head Form B (flat face) as per DIN EN 50446, direct installation on insert with cable entry (middle hole 7 mm (0.28 in))
B Separated from process in field housing, wall or pipe mounting
C With DIN rail clip on DIN rail as per IEC 60715 (TH35)
D DIN rail device for mounting on a TH35 mounting rail as per EN 60715

- The head transmitter must not be operated using the DIN rail clip and remote sensors as a substitute for a DIN rail device in a cabinet.
- When installing the head transmitter in a terminal head form B (flat face), make sure there is sufficient space in the terminal head!

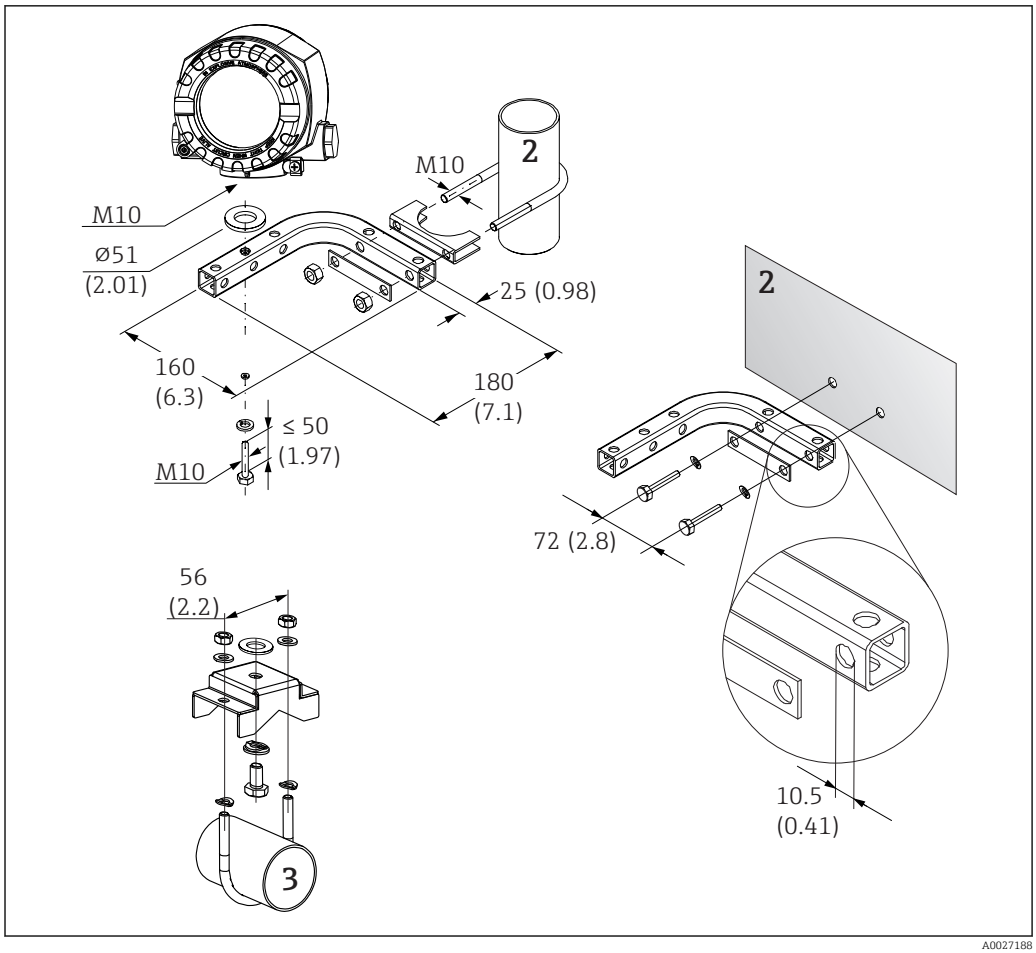

7 Mounting the field mount housing using special mounting bracket. Dimensions in mm (in)

1 Mounting with combined wall/pipe mounting bracket
2 Mounting with pipe mounting bracket 2"/V4A
3 Mounting with wall mounting bracket

Orientation

Head transmitter: no restrictions.

NOTICE

With DIN rail ransmitter: The measurement deviates from the maximum accuracy when a thermocouple is connected and the internal reference junction is used.

- ▶ Mount the device vertically and ensure that it is correctly aligned (sensor connection at bottom / power supply at top).

Environment

Ambient temperature range

- −40 to +85 °C (−40 to +185 °F), for hazardous areas see Ex documentation
- −50 to +85 °C (−58 to +185 °F), for hazardous areas see Ex documentation , Product Configurator order code for "Test, certificate, declaration", option "JM" [3)]
- −52 to +85 °C (−62 to +185 °F), for hazardous areas see Ex documentation , Product Configurator order code for "Test, certificate, declaration", option "JN" [3)]
- Head transmitter, field mount housing with separate terminal compartment incl. display: −30 to +85 °C (−22 to +185 °F). At temperatures < −20 °C (−4 °F) the display may react slowly, Product Configurator, order code for "Field housing", option "R" and "S"
- SIL mode: −40 to +70 °C (−40 to +158 °F)

3) If the temperature is below −40 °C (−40 °F), increased failure rates are likely.

Storage temperature	▪ Head transmitter: −50 to +100 °C (−58 to +212 °F) ▪ Option: −52 to 85 °C (−62 to 185 °F), Product Configurator order code for "Test, certificate, declaration", option "JN" [4)] ▪ Head transmitter, field mount housing with separate terminal compartment incl. display: −30 to +85 °C (−22 to +185 °F). At temperatures < −20 °C (−4 °F) the display may react slowly, Product Configurator, order code for "Field housing", option "R" and "S" ▪ DIN rail device: −40 to +100 °C (−40 to +212 °F)
Altitude	Up to 4000 m (4374.5 yards) above mean sea level.

Humidity	▪ Condensation:
	  ▪ Head transmitter permitted
	  ▪ DIN rail transmitter not permitted
	▪ Max. rel. humidity: 95% as per IEC 60068-2-30

Climate class	▪ Head transmitter: climate class C1 as per IEC 60654-1 ▪ DIN rail device: climate class B2 as per IEC 60654-1 ▪ Head transmitter, field mount housing with separate terminal compartment including display: climate Class Dx as per IEC 60654-1
Degree of protection	▪ Head transmitter with screw terminals: IP 00, with push-in terminals: IP 30. In installed state, depends on the terminal head or field housing used. ▪ When installing in field housing TA30A, TA30D or TA30H: IP 66/68 (NEMA Type 4x encl.) ▪ When installing in field mount housing with separate terminal compartment: IP 67, NEMA Type 4x ▪ DIN rail device: IP 20
Shock and vibration resistance	Vibration resistance as per DNVGL-CG-0339 : 2015 and DIN EN 60068-2-27 ▪ Head transmitter: 2 to 100 Hz at 4g (increased vibration stress) ▪ DIN rail device: 2 to 100 Hz at 0.7g (general vibration stress) Shock resistance as per KTA 3505 (section 5.8.4 Shock test)
Electromagnetic compatibility (EMC)	**CE compliance** Electromagnetic compatibility in accordance with all the relevant requirements of the IEC/EN 61326 series and NAMUR Recommendation EMC (NE21). For details, refer to the Declaration of Conformity. All tests were passed both with and without ongoing digital HART®-communication. Maximum measured error <1% of measuring range. Interference immunity as per IEC/EN 61326 series, industrial requirements Interference emission as per IEC/EN 61326 series, Class B equipment
Overvoltage category	Overvoltage category II
Degree of contamination	Pollution degree 2

4) If the temperature is below −50 °C (−58 °F), increased failure rates are likely.

Mechanical construction

Design, dimensions

Dimensions in mm (in)

Head transmitter

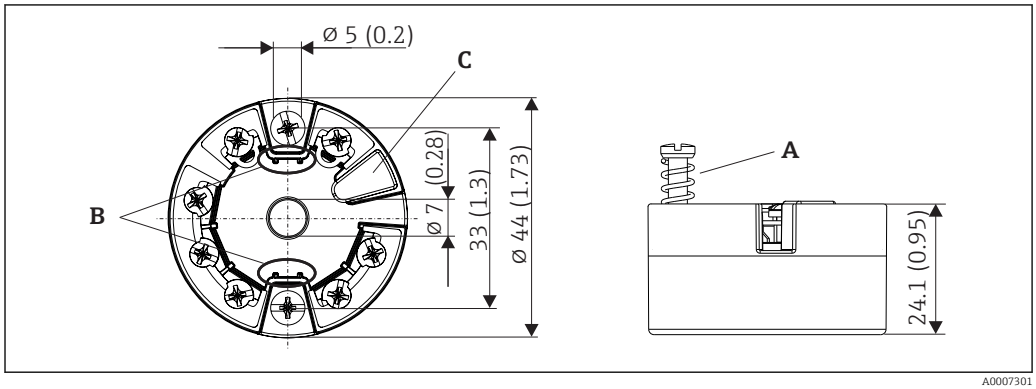

8 Version with screw terminals

A Spring travel L ≥ 5 mm (not for US - M4 securing screws)
B Mounting elements for attachable measured value display TID10
C Service interface for connecting measured value display or configuration tool

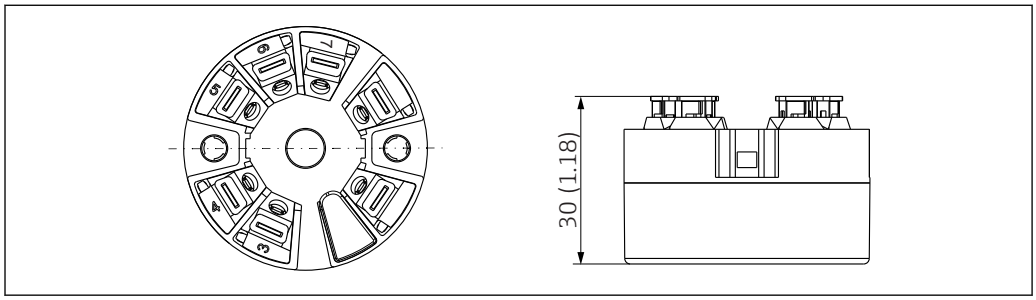

9 Version with push-in terminals. Dimensions are identical to the version with screw terminals, apart from housing height.

DIN rail device

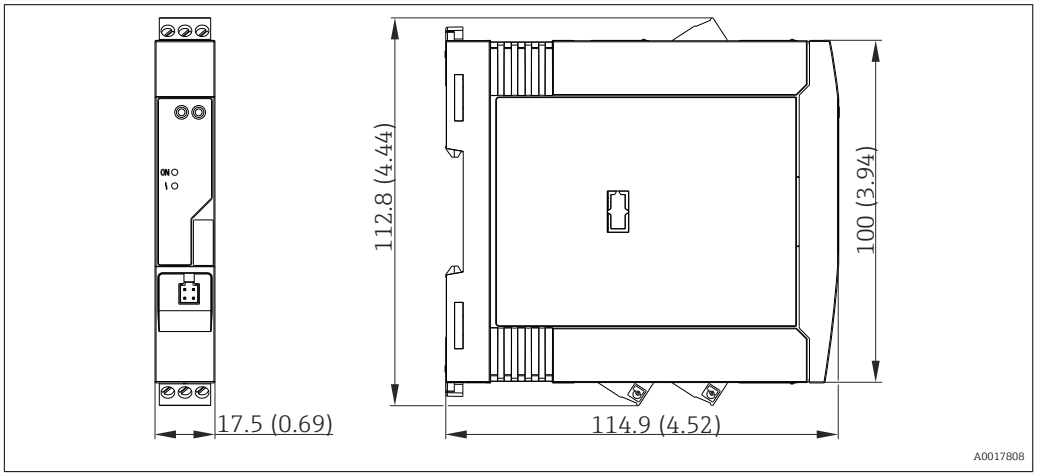

Field housing

All field housings have an internal geometry in accordance with DIN EN 50446, form B (flat face).
Cable glands in the diagrams: M20x1.5

Maximum ambient temperatures for cable glands	
Type	**Temperature range**
Polyamide cable gland ½" NPT, M20x1.5 (non-Ex)	–40 to +100 °C (–40 to 212 °F)
Polyamide cable gland M20x1.5 (for dust ignition-proof area)	–20 to +95 °C (–4 to 203 °F)
Brass cable gland ½" NPT, M20x1.5 (for dust ignition-proof area)	–20 to +130 °C (–4 to +266 °F)

TA30A	Specification
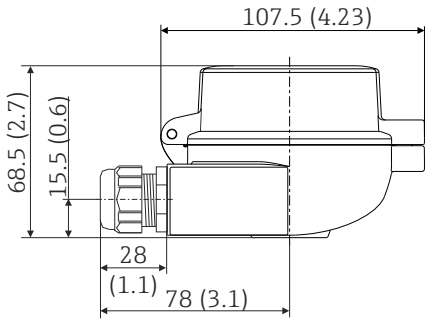	▪ Two cable entries ▪ Material: aluminum, polyester powder coated Seals: silicone ▪ Cable entry glands: 1/2" NPT and M20x1.5 ▪ Head color: blue, RAL 5012 ▪ Cap color: gray, RAL 7035 ▪ Weight: 330 g (11.64 oz)

TA30A with display window in cover	Specification
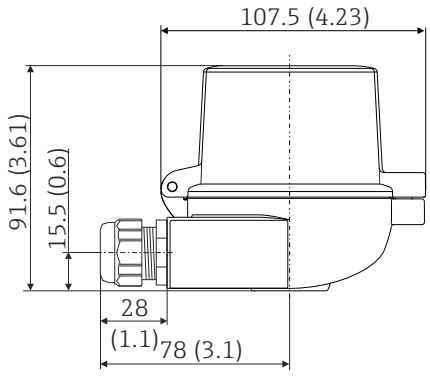	▪ Two cable entries ▪ Material: aluminum, polyester powder coated Seals: silicone ▪ Cable entry glands: 1/2" NPT and M20x1.5 ▪ Head color: blue, RAL 5012 ▪ Cap color: gray, RAL 7035 ▪ Weight: 420 g (14.81 oz)

TA30H	Specification
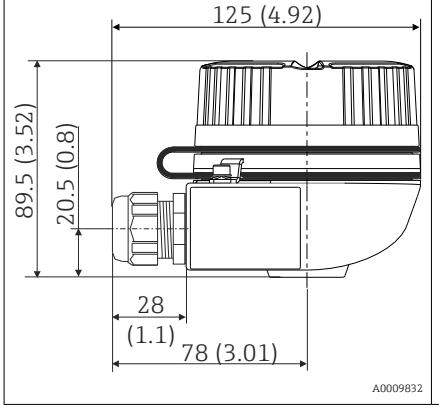	▪ Flameproof (XP) version, explosion-protected, captive screw cap, with two cable entries ▪ Protection class: NEMA Type 4x Encl. ▪ Material: ▪ Aluminum, with polyester powder coating ▪ Stainless steel 316L without coating ▪ Cable entry glands: ½" NPT, M20x1.5 ▪ Color of aluminum head: blue, RAL 5012 ▪ Color of aluminum cap: gray, RAL 7035 ▪ Weight: ▪ Aluminium approx. 640 g (22.6 oz) ▪ Stainless steel approx. 2 400 g (84.7 oz)

TA30H with display window in cover	Specification

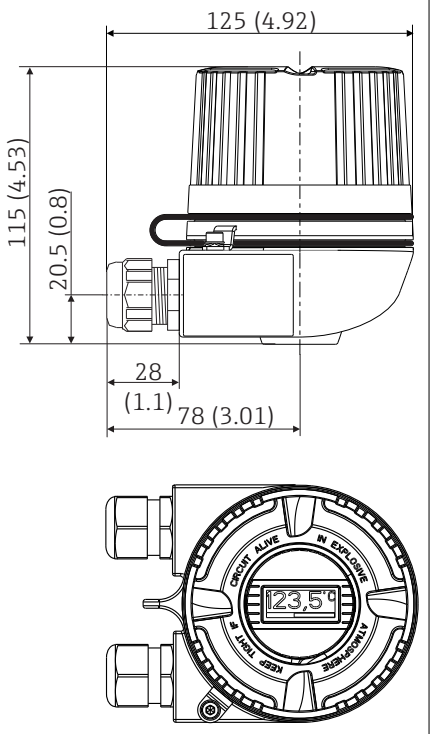	▪ Flameproof (XP) version, explosion-protected, captive screw cap, with two cable entries
	▪ Protection class: NEMA Type 4x Encl.
	▪ Material:
	  ▪ Aluminum with polyester powder coating
	  ▪ Stainless steel 316L without coating
	▪ Cable entry glands: ½" NPT, M20x1.5
	▪ Color of aluminum head: blue, RAL 5012
	▪ Color of aluminum cap: gray, RAL 7035
	▪ Weight:
	  ▪ Aluminium approx. 860 g (30.33 oz)
	  ▪ Stainless steel approx. 2 900 g (102.3 oz)

TA30D	Specification
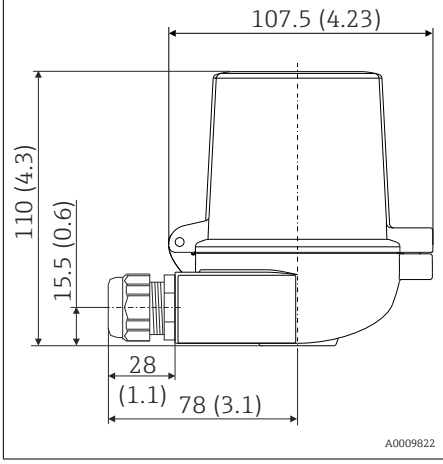	▪ 2 cable entries ▪ Material: aluminum, polyester powder coated Seals: silicone ▪ Cable entry glands: 1/2" NPT and M20x1.5 ▪ Two head transmitters can be mounted. In the standard configuration one transmitter is mounted in the terminal head cover and an additional terminal block is installed directly on the insert. ▪ Head color: blue, RAL 5012 ▪ Cap color: gray, RAL 7035 ▪ Weight: 390 g (13.75 oz)

Field mount housing with separate terminal compartment	Specification
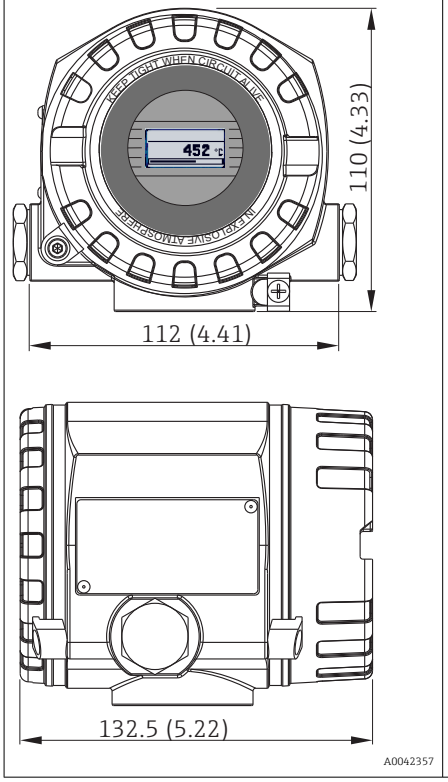	▪ Separate electronics compartment and terminal compartment ▪ Display rotatable in 90° increments ▪ Material: Die-cast aluminum housing AlSi10Mg with powder coating on polyester base ▪ Cable entry: 2x ½" NPT, 2x M20x1.5 ▪ Protection class: IP67, NEMA type 4x ▪ Color: blue, RAL 5012 ▪ Weight: approx. 1.4 kg (3 lb)

Weight

- Head transmitter: approx. 40 to 50 g (1.4 to 1.8 oz)
- Field housing: see specifications
- DIN rail device: approx. 100 g (3.53 oz)

Materials

All the materials used are RoHS-compliant.

- Housing: polycarbonate (PC)
- Terminals:
  - Screw terminals: nickel-plated brass and gold-plated or tin-plated contacts
  - Push-in terminals: tin-plated brass, contact springs 1.4310, 301 (AISI)
- Potting compound:
  - Head transmitter: QSIL 553
  - DIN rail housing: Silgel612EH

Field housing: see specifications

Operability

Local operation

Head transmitter

The head transmitter has no display or operating elements. There is the option of using the attachable measured value display TID10 together with the head transmitter. When the head transmitter will be ordered with the field mount housing with separate terminal compartment, the display is already included. The display provides plain-text information on the current measured value and the measuring point identification. An optional bar graph is also used. In the event of a fault in the measurement chain, this will be displayed in inverse color showing the channel ident and error number. DIP switches can be found on the rear of the display. These enable hardware settings to be made e.g. write protection.

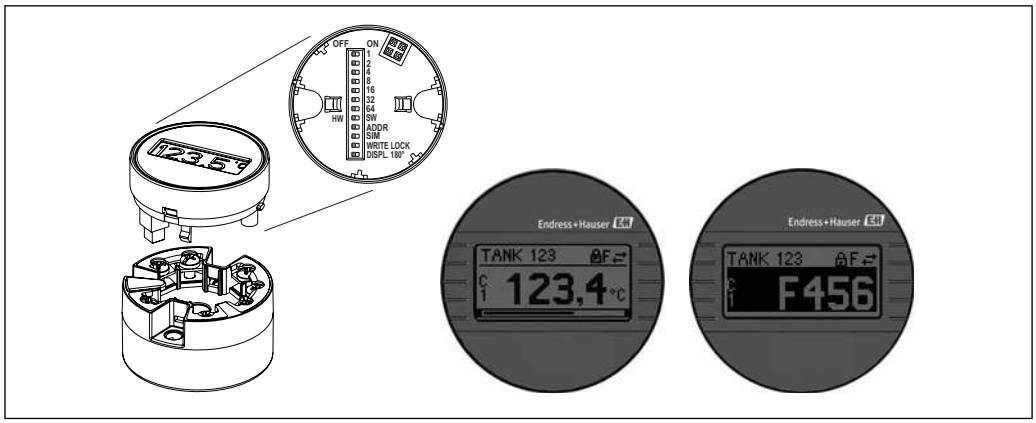

10 Attachable measured value display TID10 with bar graph indicator (optional)

If the head transmitter is installed in a field housing and used with a display, an enclosure with a glass window in the cover must be used.

DIN rail device

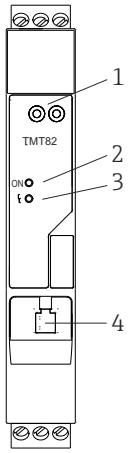

1:	HART® communication jacks (2 mm) for commissioning and configuration	
2:	Power LED	A green LED indicates that the voltage supply is correct
3:	Status LED	Off: no diagnostic message
		Red: Category F diagnostic message
		Red flashing: Category C, S or M diagnostic message
4:	Service interface	For connecting a configuration tool (not in SIL mode)

For connecting a configuration tool

The configuration of HART® functions and device-specific parameters takes place via HART®-communication or the CDI interface (service interface) of the device. There are special configuration tools from different manufacturers available for this purpose. For more information, contact your Endress+Hauser sales representative.

Certificates and approvals

For the approvals available, see the Configurator on the specific product page: www.endress.com → (search for device name)

CE mark

The product meets the requirements of the harmonized European standards. As such, it complies with the legal specifications of the EC directives. The manufacturer confirms successful testing of the product by affixing to it the CE-mark.

EAC mark

The product meets the legal requirements of the EEU guidelines. The manufacturer confirms the successful testing of the product by affixing the EAC mark.

Ex approval

Information about currently available Ex versions (ATEX, FM, CSA, etc.) can be supplied by your E+H Sales Center on request. All explosion protection data are given in separate documentation which is available upon request.

UL approval	More information under UL Product iq™, search for keyword "E225237")
CSA C/US	The device meets the requirements of "CLASS 2252 06 - Process Control Equipment" and "CLASS 2252 86 - Process Control Equipment (Certified to US Standards)"
Functional safety	**SIL 2/3 (hardware/software) certified to:** ▪ IEC 61508-1:2010 (Management) ▪ IEC 61508-2:2010 (Hardware) ▪ IEC 61508-3:2010 (Software)
HART® certification	The temperature transmitter is registered by the HART® Communication Foundation. The device meets the requirements of the HART® Communication Protocol Specifications, Revision 7.
Marine approvals	For the type approval certificates (DNVGL, etc.) currently available, please contact your Sales Center for information. All data relating to shipbuilding can be found in separate type approval certificates which can be requested as needed.
Test certificate	Compliant with: ▪ WELMEC 8.8, only in SIL mode: "Guide on the General and Administrative Aspects of the Voluntary System of Modular Evaluation of Measuring Instruments". ▪ OIML R117-1 Edition 2007 (E) "Dynamic measuring systems for liquids other than water". ▪ EN 12405-1/A2 Edition 2010 "Gas meters – Conversion devices – Part 1: Volume conversion". ▪ OIML R140-1 Edition 2007 (E) "Measuring systems for gaseous fuel"
Other standards and guidelines	▪ IEC 60529: Degrees of protection provided by enclosures (IP code) ▪ IEC/EN 61010-1: Safety requirements for electrical equipment for measurement, control and laboratory use ▪ IEC/EN 61326 series: Electromagnetic compatibility (EMC requirements)

Ordering information

Detailed ordering information is available for your nearest sales organization www.addresses.endress.com or in the Product Configurator under www.endress.com :

1. Click Corporate
2. Select the country
3. Click Products
4. Select the product using the filters and search field
5. Open the product page

The Configuration button to the right of the product image opens the Product Configurator.

Product Configurator - the tool for individual product configuration
- Up-to-the-minute configuration data
- Depending on the device: Direct input of measuring point-specific information such as measuring range or operating language
- Automatic verification of exclusion criteria
- Automatic creation of the order code and its breakdown in PDF or Excel output format
- Ability to order directly in the Endress+Hauser Online Shop

Accessories

Various accessories, which can be ordered with the device or subsequently from Endress+Hauser, are available for the device. Detailed information on the order code in question is available from your local Endress+Hauser sales center or on the product page of the Endress+Hauser website: www.endress.com.

Accessories included in the scope of delivery:
- Printed version of Brief Operating Instructions in English
- Optional: Functional safety manual (SIL mode)
- ATEX supplementary documentation: ATEX Safety instructions (XA), **C**ontrol **D**rawings (CD)
- Mounting material for head transmitter

Device-specific accessories

Accessories for the head transmitter
TID10 display unit for Endress+Hauser head transmitter iTEMP TMT8x [1] or TMT7x, attachable
TID10 service cable; connecting cable for service interface, 40 cm
Field housing TA30x for Endress+Hauser head transmitter
Adapter for DIN rail mounting, clip as per IEC 60715 (TH35) without securing screws
Standard - DIN mounting kit (2 screws + springs, 4 securing disks and 1 display connector cover)
US - M4 mounting screws (2 M4 screws and 1 display connector cover)
Stainless steel wall mounting bracket Stainless steel pipe mounting bracket

1) Without TMT80

Accessories for field mount housing with separate terminal compartment
Cover locking
Stainless steel wall mounting bracket Stainless steel pipe mounting bracket
Cable glands M20x1.5 and NPT ½"
Adapter M20x1.5 outside/M24x1.5 inside
Dummy plugs M20x1.5 and NPT ½"

Communication-specific accessories

Accessories	Description
Commubox FXA195 HART	For intrinsically safe HART® communication with FieldCare via the USB interface. For details, see Technical Information TI404F/00
Commubox FXA291	Connects Endress+Hauser field devices with a CDI interface (= Endress+Hauser Common Data Interface) and the USB port of a computer or laptop. For details, see Technical Information TI405C/07
WirelessHART adapter	Is used for the wireless connection of field devices. The WirelessHART® adapter can be easily integrated into field devices and existing infrastructures, offers data protection and transmission safety and can be operated in parallel with other wireless networks. For details, see Operating Instructions BA061S/04
Field Xpert SMT70	Universal, high-performance tablet PC for device configuration The tablet PC enables mobile plant asset management in hazardous and non-hazardous areas. It is suitable for commissioning and maintenance staff to manage field instruments with a digital communication interface and to record progress. This tablet PC is designed as a comprehensive, all-in-one solution. With a pre-installed driver library, it is an easy-to-use, touch-sensitive tool which can be used to manage field instruments throughout their entire life cycle. For details, see Technical Information TI01342S/04

Service-specific accessories

Accessories	Description
Applicator	Software for selecting and sizing Endress+Hauser measuring devices: ▪ Calculation of all the necessary data for identifying the optimum measuring device: e.g. pressure loss, accuracy or process connections. ▪ Graphic illustration of the calculation results Administration, documentation and access to all project-related data and parameters over the entire life cycle of a project. Applicator is available: Via the Internet: https://portal.endress.com/webapp/applicator

Accessories	Description
Configurator	Product Configurator - the tool for individual product configuration ▪ Up-to-the-minute configuration data ▪ Depending on the device: Direct input of measuring point-specific information such as measuring range or operating language ▪ Automatic verification of exclusion criteria ▪ Automatic creation of the order code and its breakdown in PDF or Excel output format ▪ Ability to order directly in the Endress+Hauser Online Shop The Configurator is available on the Endress+Hauser website at: www.endress.com -> Click "Corporate" -> Select your country -> Click "Products" -> Select the product using the filters and search field -> Open product page -> The "Configure" button to the right of the product image opens the Product Configurator.

DeviceCare SFE100	Configuration tool for devices via fieldbus protocols and Endress+Hauser service protocols. DeviceCare is the tool developed by Endress+Hauser for the configuration of Endress+Hauser devices. All smart devices in a plant can be configured via a point-to-point or point-to-bus connection. The user-friendly menus enable transparent and intuitive access to the field devices. For details, see Operating Instructions BA00027S

FieldCare SFE500	FDT-based plant asset management tool from Endress+Hauser. It can configure all smart field units in your system and helps you manage them. By using the status information, it is also a simple but effective way of checking their status and condition. For details, see Operating Instructions BA00027S and BA00065S

Accessories	Description
W@M	Life cycle management for your plant W@M offers assistance with a wide range of software applications over the entire process: from planning and procurement to the installation, commissioning and operation of the measuring devices. All the relevant information is available for every measuring device over the entire life cycle, such as the device status, device-specific documentation, spare parts etc. The application already contains the data of your Endress+Hauser device. Endress+Hauser also takes care of maintaining and updating the data records. W@M is available: Via the Internet: www.endress.com/lifecyclemanagement

System components

Accessories	Description
RN22	Single- or two-channel active barrier for safe separation of 0/4 to 20 mA standard signal circuits with bidirectional HART® transmission. In the signal duplicator option, the input signal is transmitted to two galvanically isolated outputs. The device has one active and one passive current input; the outputs can be operated actively or passively. The RN22 requires a supply voltage of 24 V_{DC}. For details, see Technical Information TI01515K
RN42	Single-channel active barrier for safe separation of 0/4 to 20 mA standard signal circuits with bidirectional HART® transmission. The device has one active and one passive current input; the outputs can be operated actively or passively. The RN42 can be powered with a wide range voltage of 24 to 230 $V_{AC/DC}$. For details, see Technical Information TI01584K
RIA15	Process display, digital, loop-powered display unit for 4 to 20 mA circuits, panel mounting, with optional HART® communication. Displays 4 to 20 mA or up to 4 HART® process variables For details, see Technical Information TI01043K
Graphic Data Manager Memograph M	The Advanced Data Manager Memograph M is a flexible and powerful system for organizing process values. Optional HART® input cards are available, each providing four inputs (4/8/12/16/20). They transmit highly accurate process values from the directly connected HART® devices, so that they are available for calculation and data logging. The measured process values are clearly presented on the display and logged safely, monitored for limit values and analyzed. Via common communication protocols, the measured and calculated values can be very easily communicated to higher-level systems or individual plant modules can be interconnected. For details, see Technical Information TI01180R

Documentation

- Operating Instructions 'iTEMP TMT82' (BA01028T) and hard copy of associated Brief Operating Instructions 'iTEMP TMT82' (KA01095T)
- Functional Safety Manual 'iTEMP TMT82' (SD01172T)
- Supplementary ATEX documentation:
  ATEX II 1G Ex ia IIC: XA00102T
  ATEX II2G Ex d IIC: XA01007T (transmitter in field housing)
  ATEX II2(1)G Ex ia IIC: XA01012T (transmitter in field housing)



www.addresses.endress.com

Endress+Hauser

People for Process Automation