Product data sheet
Characteristics

XXA30S1VM12
Ultrasonic sensor, stainless steel, cylindrical M30, angled, 1 m, 0...10 V



Main

Range of product	OsiSense XX
Sensor type	Ultrasonic sensor
Series name	General purpose
Sensor name	XXA
Sensor design	Cylindrical M30
Detection system	Diffuse (with 90° head)
[Sn] nominal sensing distance	1 m adjustable with remote teach push-button
Material	Metal
Type of output signal	Analogue
Wiring technique	5-wire
Analogue output function	0...10 V
[Us] rated supply voltage	24 V DC with reverse polarity protection
Electrical connection	Male connector M12 5 pins
[Sd] sensing range	0.155…1 m
IP degree of protection	IP65 conforming to IEC 60529 IP67

Complementary

Enclosure material	Stainless steel 316L
Front material	Epoxy Rubber Resin
Supply voltage limits	14…30 V DC
Function available	With synchronisation mode Software configurable
[Sa] assured operating distance	0.155…1 m (teach mode)
Blind zone	155 mm
Transmission frequency	120 kHz
Repeat accuracy	0.1 %
Deviation angle from 90° of object to be detected	-15…15 °
Minimum size of detected object	Cylinder diameter 1 mm at 1 m
Status LED	Output state: 1 LED (yellow)

Disclaimer: This documentation is not intended as a substitute for and is not to be used for determining suitability or reliability of these products for specific user applications

	Echo state: 1 LED (green)
Current consumption	65 mA
Maximum switching capacity	>= 1 kOhm overload and short-circuit protection
Setting-up	Teach mode Configurator software
Maximum delay first up	180 ms
Maximum delay recovery	100 ms
Marking	CE
Threaded length	74.7 mm
Height	30 mm
Width	30 mm
Depth	129.6 mm
Product weight	0.17 kg

Environment

Standards	EN/IEC 60947-5-2 CSA C22.2 No 14 UL 508
Product certifications	CULus E2 EAC RCM Ecolab
Ambient air temperature for operation	-25…70 °C
Ambient air temperature for storage	-40…80 °C
Vibration resistance	+/-1 mm conforming to IEC 60068-2-6 (f = 10…55 Hz)
Shock resistance	30 gn in all 3 axes for 11 ms conforming to IEC 60068-2-27
Resistance to electrostatic discharge	8 kV conforming to IEC 61000-4-2
Resistance to electromagnetic fields	10 V/m level 3 conforming to IEC 61000-4-3
Resistance to fast transients	2 kV conforming to IEC 61000-4-4

Offer Sustainability

EU RoHS Directive	Not applicable, out of EU RoHS legal scope
Environmental Disclosure	Product Environmental Profile
Circularity Profile	No need of specific recycling operations

Contractual warranty

Warranty	18 months

XXA30S1VM12

Dimensions

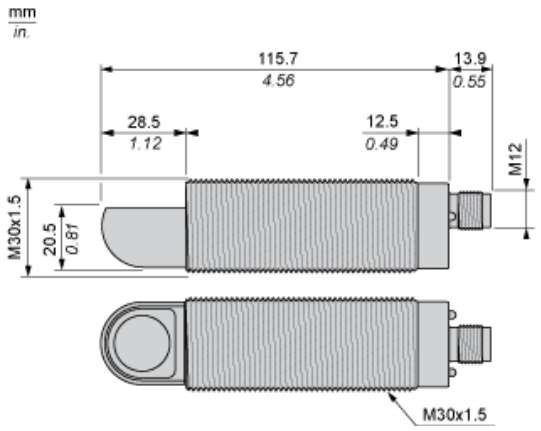

Connections

Connector Wiring

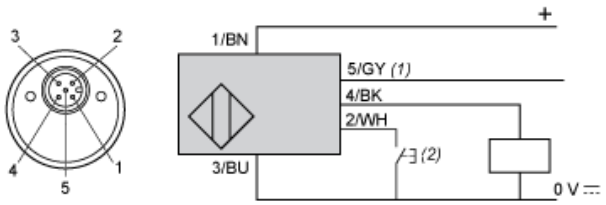

(1) : Synchronization
(2) : External setting pushbutton or XXZPB100 remote teach pushbutton.

Pin number	Wire color	Description
1	BN: Brown	+ 24VDC
2	WH: White	Input teach
3	BU: Blue	0 VDC
4	BK: Black	Output
5	GY: Grey	Synchronization

Wiring Scheme. Analog Output

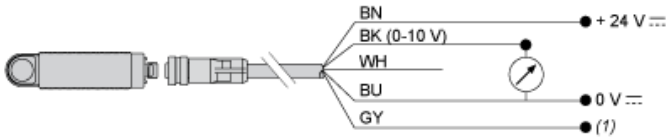

(1) : Synchronization
0-10 V: 1 kΩ…∞

Wiring for the Synchronization Function (Side by Side Application)

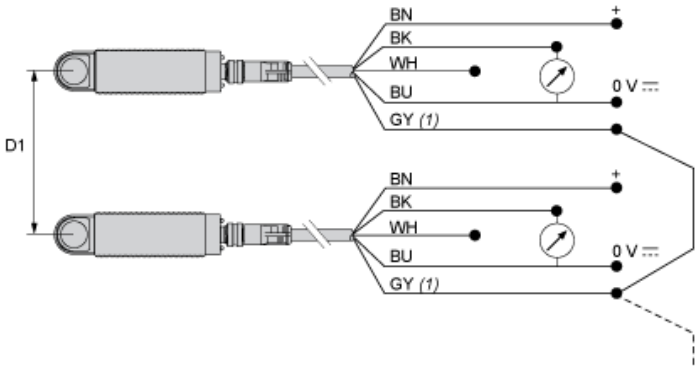

(1) : Synchronization
D1 : 1/8 Sn
BN : Brown
WH : White
BU : Blue
BK : Black
GY : Grey

NOTE: Up to 8 sensors can be synchronized to operate side by side by electrically connecting all pin no.5 (grey) wires together.

To synchronize more than 8 sensors, a PLC output can be used (the pins no.5 must be simultaneously driven by the rising edge of a pulse).

Performance Curves

Detection Curve with 100 x 100 mm / 3.94 x 3.94 inches Square Target

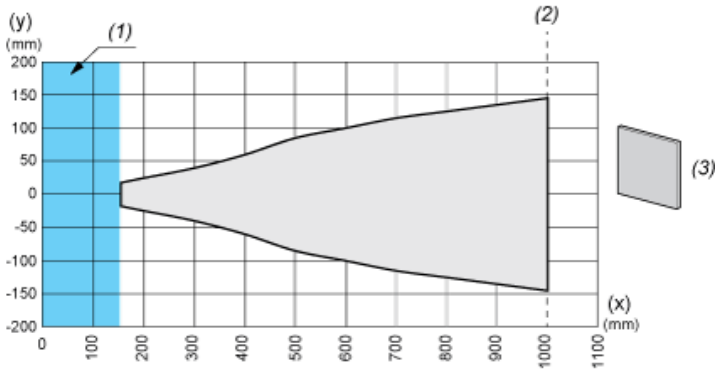

(X) : Target distance
(Y) : Detection limit
(1) : Blind zone: 155 mm / 6.10 inches
(2) : Sn max.
(3) : 100 x 100 mm / 3.94 x 3.94 inches stainless steel plate

Detection Curve with Round Bar

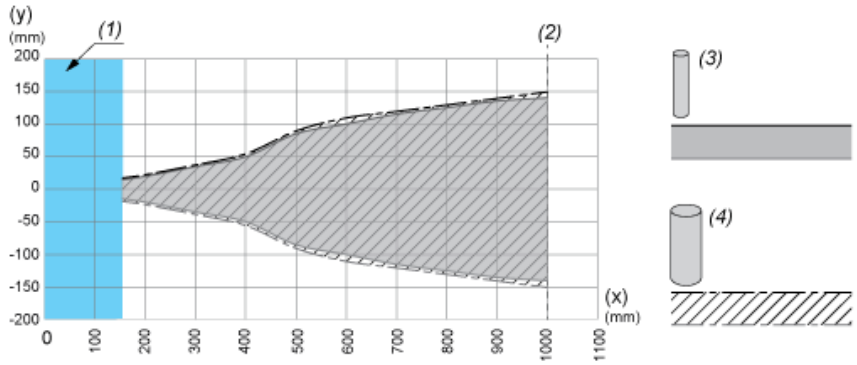

(X) : Target distance
(Y) : Detection limit
(1) : Blind zone: 155 mm / 6.10 inches
(2) : Sn max.
(3) : Ø 10 mm / 0.394 inches stainless steel cylinder
(4) : Ø 25 mm / 0.984 inches stainless steel cylinder