NH fuse-links gG 690VAC

double indicator/live gripping-lugs size 000, 00, 0, 1, 2, 3

LOW VOLTAGE IEC FUSES

IEC NH FUSE-LINKS



FEATURES & BENEFITS

- Dimensions according to DIN 43 620 parts 1 to 4
- Non-isolated gripping lugs
- Double indicator
- 0% cadmium

APPLICATIONS

- gG: general purpose cable and line protection

STANDARDS

- VDE 0636 Part 201
- IEC 60269-1 and -2

The NH system is classified among plug-in fuse systems and is composed of:

- fuse-base (possibly including terminal covers and phase barriers)
- fuse-link with blade contact
- fuse-link replacement device (LV HRC fuse puller)

Since the design of this system cannot guarantee non-interchangeability of rated current it must be handled by a qualified professional.

Type “gG” NH fuse-links are full range breaking capacity fuse-links and are used to protect cables and equipment. They can interrupt any current surge, from the lowest fusing current up to their breaking capacity, and so can be used alone as protection. They also protect electrical devices and industrial set-ups from the electrodynamic effects of very high short-circuit currents.

TECHNICAL DATA OVERVIEW

Voltage AC	690 VAC
Voltage Range DC	250 ... 400 VDC
Ampere Range (A)	2 ... 500 A
Size per Standard	000, 00, 0, 1, 2, 3
Speed/Characteristic	gG
I.R. AC (IEC)	80 kA
I.R. DC (IEC)	80 kA
Body Material	ceramic
Contact Materials	copper, silver-plated

© 2021 Mersen. All rights reserved. Mersen reserves the right to change, adapt, limit or discontinue its products. Therefore the data provided herein are for information only and are not contractually binding. To ensure that Mersen provides the best solution to your needs, please contact and provide Mersen with all relevant technical specifications and conditions.

PRODUCT RANGE



NH000GG69V2

Size 000 gG 690VAC

Catalog number	Item number	Rated voltage AC (IEC)	Rated voltage DC (IEC)	Rated current I_n	Power dissipation at I_n	Package	Weight
NH000GG69V2	E228440	690 V	250 V	2 A	1.9 W	3	0.13 kg
NH000GG69V4	F228441	690 V	250 V	4 A	1.5 W	3	0.13 kg
NH000GG69V6	G228442	690 V	250 V	6 A	1.6 W	3	0.13 kg
NH000GG69V10	J228444	690 V	250 V	10 A	1.1 W	3	0.13 kg
NH000GG69V16	K228445	690 V	250 V	16 A	1.8 W	3	0.13 kg
NH000GG69V20	L228446	690 V	250 V	20 A	2.3 W	3	0.13 kg
NH000GG69V25	M228447	690 V	250 V	25 A	2.4 W	3	0.13 kg
NH000GG69V32	N228448	690 V	250 V	32 A	3.1 W	3	0.13 kg
NH000GG69V35	P228449	690 V	250 V	35 A	3 W	3	0.13 kg
NH000GG69V40	Q228450	690 V	250 V	40 A	3.7 W	3	0.13 kg
NH000GG69V50	R228451	690 V	250 V	50 A	4.1 W	3	0.13 kg
NH000GG69V63	S228452	690 V	250 V	63 A	5.4 W	3	0.13 kg
NH000GG69V80	T228453	690 V	250 V	80 A	6.5 W	3	0.13 kg



NH00GG69V32

Size 00 gG 690VAC

Catalog number	Item number	Rated voltage AC (IEC)	Rated voltage DC (IEC)	Rated current I_n	Power dissipation at I_n	Package	Weight
NH00GG69V32	V228454	690 V	250 V	32 A	3.1 W	3	0.2 kg
NH00GG69V35	W228455	690 V	250 V	35 A	3 W	3	0.2 kg
NH00GG69V40	X228456	690 V	250 V	40 A	3.7 W	3	0.2 kg
NH00GG69V50	Y228457	690 V	250 V	50 A	4.1 W	3	0.2 kg
NH00GG69V63	Z228458	690 V	250 V	63 A	5.6 W	3	0.2 kg
NH00GG69V80	A228459	690 V	250 V	80 A	6.8 W	3	0.2 kg
NH00GG69V100	B228460	690 V	250 V	100 A	7.5 W	3	0.2 kg
NH00GG69V125	C228461	690 V	250 V	125 A	10 W	3	0.2 kg



NH0GG69V160

Size 0 gG 690VAC

Catalog number	Item number	Rated voltage AC (IEC)	Rated voltage DC (IEC)	Rated current I_n	Power dissipation at I_n	Package	Weight
NH0GG69V6	D228462	690 V	400 V	6 A	1.6 W	3	0.27 kg
NH0GG69V10	E228463	690 V	400 V	10 A	1.1 W	3	0.27 kg
NH0GG69V16	F228464	690 V	400 V	16 A	1.8 W	3	0.27 kg
NH0GG69V20	G228465	690 V	400 V	20 A	2.3 W	3	0.27 kg
NH0GG69V25	H228466	690 V	400 V	25 A	2.4 W	3	0.27 kg
NH0GG69V32	J228467	690 V	400 V	32 A	3.1 W	3	0.27 kg
NH0GG69V35	K228468	690 V	400 V	35 A	3 W	3	0.27 kg
NH0GG69V40	L228469	690 V	400 V	40 A	3.7 W	3	0.27 kg
NH0GG69V50	M228470	690 V	400 V	50 A	4.1 W	3	0.27 kg
NH0GG69V63	N228471	690 V	400 V	63 A	6.6 W	3	0.27 kg
NH0GG69V80	P228472	690 V	400 V	80 A	8 W	3	0.27 kg
NH0GG69V100	Q228473	690 V	400 V	100 A	9.4 W	3	0.27 kg
NH0GG69V125	R228474	690 V	400 V	125 A	11.8 W	3	0.27 kg
NH0GG69V160	S228475	690 V	400 V	160 A	14.6 W	3	0.27 kg

© 2021 Mersen. All rights reserved. Mersen reserves the right to change, adapt, limit or discontinue its products. Therefore the data provided herein are for information only and are not contractually binding. To ensure that Mersen provides the best solution to your needs, please contact and provide Mersen with all relevant technical specifications and conditions.

PRODUCT RANGE



NH1GG69V20

Size 1 gG 690VAC

Catalog number	Item number	Rated voltage AC (IEC)	Rated voltage DC (IEC)	Rated current I_n	Power dissipation at I_n	Width	Package	Weight
NH1GG69V16	T228476	690 V	400 V	16 A	1.8 W	29.5 mm	3	0.27 kg
NH1GG69V20	V228477	690 V	400 V	20 A	2.3 W	29.5 mm	3	0.27 kg
NH1GG69V25	W228478	690 V	400 V	25 A	2.4 W	29.5 mm	3	0.27 kg
NH1GG69V32	X228479	690 V	400 V	32 A	3.1 W	29.5 mm	3	0.27 kg
NH1GG69V35	Y228480	690 V	400 V	35 A	3 W	29.5 mm	3	0.27 kg
NH1GG69V40	Z228481	690 V	400 V	40 A	3.7 W	29.5 mm	3	0.27 kg
NH1GG69V50	A228482	690 V	400 V	50 A	4.1 W	29.5 mm	3	0.27 kg
NH1GG69V63	B228483	690 V	400 V	63 A	6.6 W	29.5 mm	3	0.27 kg
NH1GG69V80	C228484	690 V	400 V	80 A	8 W	29.5 mm	3	0.27 kg
NH1GG69V100	D228485	690 V	400 V	100 A	9.4 W	29.5 mm	3	0.27 kg
NH1GG69V125	E228486	690 V	400 V	125 A	11.8 W	39.5 mm	3	0.42 kg
NH1GG69V160	F228487	690 V	400 V	160 A	14.6 W	39.5 mm	3	0.42 kg
NH1GG69V200	G228488	690 V	400 V	200 A	18 W	39.5 mm	3	0.42 kg
NH1GG69V224	V233261	690 V	400 V	224 A	19 W	39.5 mm	3	0.42 kg
NH1GG69V250	W233262	690 V	400 V	250 A	20 W	39.5 mm	3	0.42 kg



NH2GG69V32

Size 2 gG 690VAC

Catalog number	Item number	Rated voltage AC (IEC)	Rated voltage DC (IEC)	Rated current I_n	Power dissipation at I_n	Width	Package	Weight
NH2GG69V32	H228489	690 V	250 V	32 A	3.1 W	39.5 mm	3	0.42 kg
NH2GG69V35	J228490	690 V	250 V	35 A	3 W	39.5 mm	3	0.42 kg
NH2GG69V40	K228491	690 V	250 V	40 A	3.7 W	39.5 mm	3	0.42 kg
NH2GG69V50	L228492	690 V	250 V	50 A	4.1 W	39.5 mm	3	0.42 kg
NH2GG69V63	M228493	690 V	250 V	63 A	6.8 W	39.5 mm	3	0.42 kg
NH2GG69V80	N228494	690 V	250 V	80 A	8.3 W	39.5 mm	3	0.42 kg
NH2GG69V100	P228495	690 V	250 V	100 A	10.7 W	39.5 mm	3	0.42 kg
NH2GG69V125	Q228496	690 V	250 V	125 A	12.2 W	39.5 mm	3	0.42 kg
NH2GG69V160	R228497	690 V	250 V	160 A	15 W	39.5 mm	3	0.42 kg
NH2GG69V200	S228498	690 V	250 V	200 A	18.5 W	39.5 mm	3	0.42 kg
NH2GG69V224	T228499	690 V	250 V	224 A	19.2 W	39.5 mm	3	0.42 kg
NH2GG69V250	V228500	690 V	250 V	250 A	20.6 W	39.5 mm	3	0.42 kg
NH2GG69V300	W228501	690 V	250 V	300 A	21 W	51 mm	3	0.64 kg
NH2GG69V315	X228502	690 V	250 V	315 A	25 W	51 mm	3	0.64 kg
NH2GG69V355	Y228503	690 V	250 V	355 A	31.5 W	51 mm	3	0.64 kg



NH3GG69V500

Size 3 gG 690VAC

Catalog number	Item number	Rated voltage AC (IEC)	Rated voltage DC (IEC)	Rated current I_n	Power dissipation at I_n	Width	Package	Weight
NH3GG69V250	Z228504	690 V	250 V	250 A	21.1 W	51 mm	1	0.65 kg
NH3GG69V300	A228505	690 V	250 V	300 A	22.6 W	51 mm	1	0.65 kg
NH3GG69V315	B228506	690 V	250 V	315 A	25 W	51 mm	1	0.65 kg
NH3GG69V355	C228507	690 V	250 V	355 A	32 W	51 mm	1	0.65 kg
NH3GG69V400	D228508	690 V	250 V	400 A	34 W	70 mm	1	1.05 kg
NH3GG69V425	E228509	690 V	250 V	425 A	34 W	70 mm	1	1.05 kg
NH3GG69V500	F228510	690 V	250 V	500 A	43 W	70 mm	1	1.05 kg

© 2021 Mersen. All rights reserved. Mersen reserves the right to change, adapt, limit or discontinue its products. Therefore the data provided herein are for information only and are not contractually binding. To ensure that Mersen provides the best solution to your needs, please contact and provide Mersen with all relevant technical specifications and conditions.

TECHNICAL DATA

	Size 000	Size 00	Size 0	Size 1	Size 2	Size 3
Size	000	00	0	1	2	3
Rated current	2 ... 80 A	32 ... 125 A	6 ... 160 A	16 ... 250 A	32 ... 335 A	250 ... 500 A
Rated breaking capacity AC	80 kA	80 kA	80 kA	80 kA	80 kA	80 kA
Rated voltage AC	690 V	690 V	690 V	690 V	690 V	690 V
Rated voltage DC	250 V	250 V	400 V	400 V	250 V	250 V
Indication System	double indicator	double indicator	double indicator	double indicator	double indicator	double indicator
Width	21 mm	30 mm	30 mm	40 mm	52 mm	72 mm

© 2021 Mersen. All rights reserved. Mersen reserves the right to change, adapt, limit or discontinue its products. Therefore the data provided herein are for information only and are not contractually binding. To ensure that Mersen provides the best solution to your needs, please contact and provide Mersen with all relevant technical specifications and conditions.

TIME CURRENT CHARACTERISTIC CURVES

Size 000

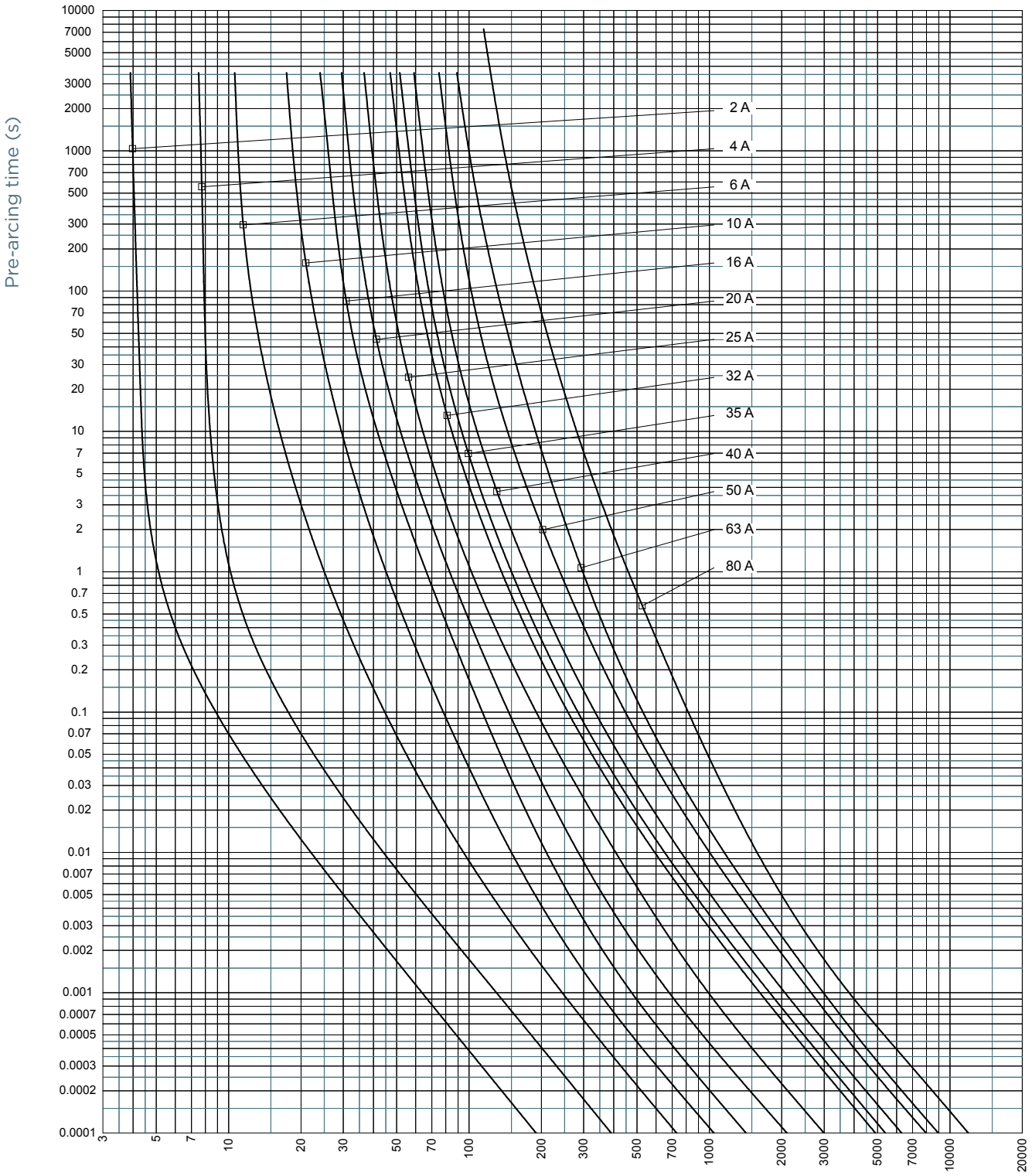

© 2021 Mersen. All rights reserved. Mersen reserves the right to change, adapt, limit or discontinue its products. Therefore the data provided herein are for information only and are not contractually binding. To ensure that Mersen provides the best solution to your needs, please contact and provide Mersen with all relevant technical specifications and conditions.

TIME CURRENT CHARACTERISTIC CURVES

Size 00

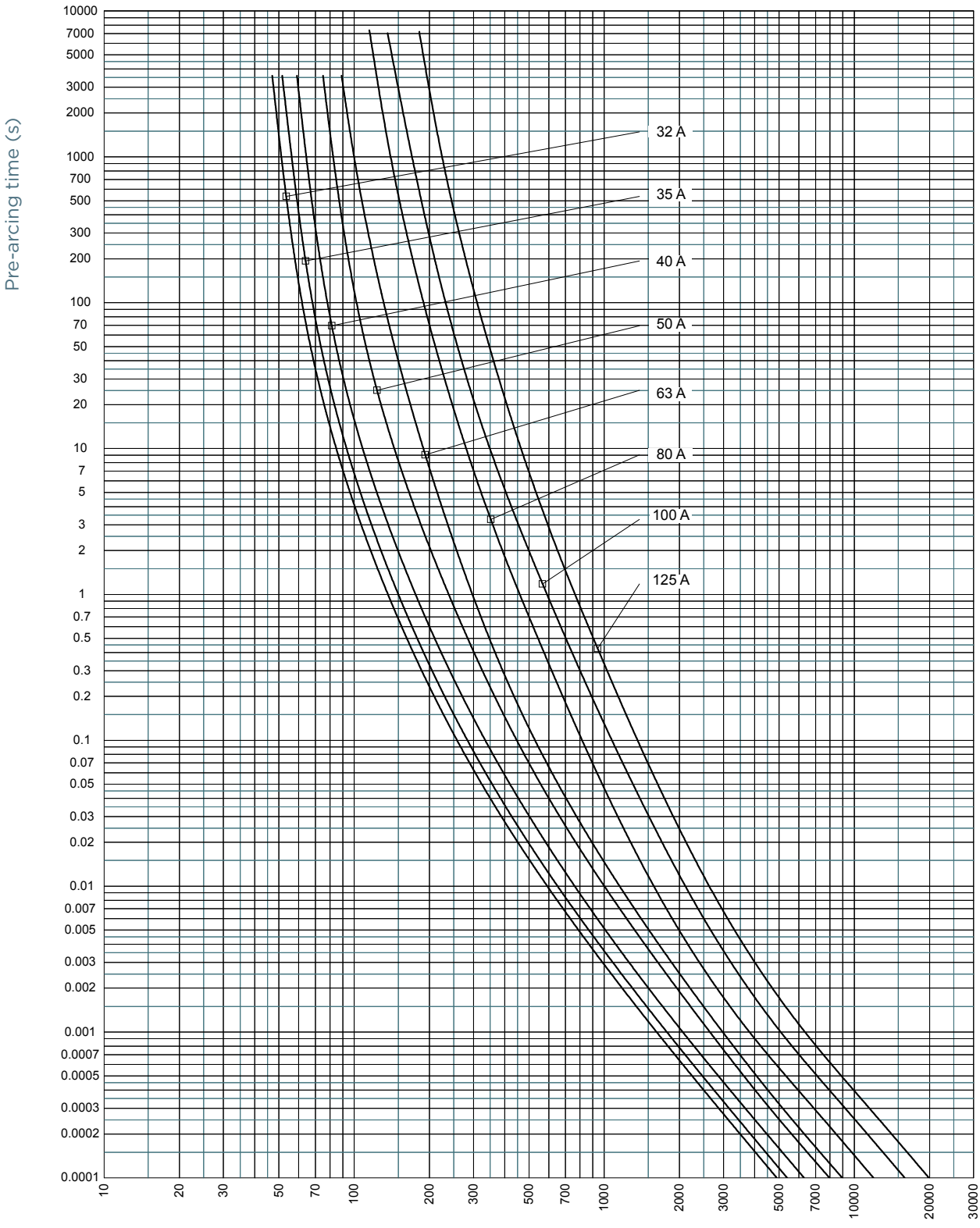

© 2021 Mersen. All rights reserved. Mersen reserves the right to change, adapt, limit or discontinue its products. Therefore the data provided herein are for information only and are not contractually binding. To ensure that Mersen provides the best solution to your needs, please contact and provide Mersen with all relevant technical specifications and conditions.

TIME CURRENT CHARACTERISTIC CURVES

Size 0

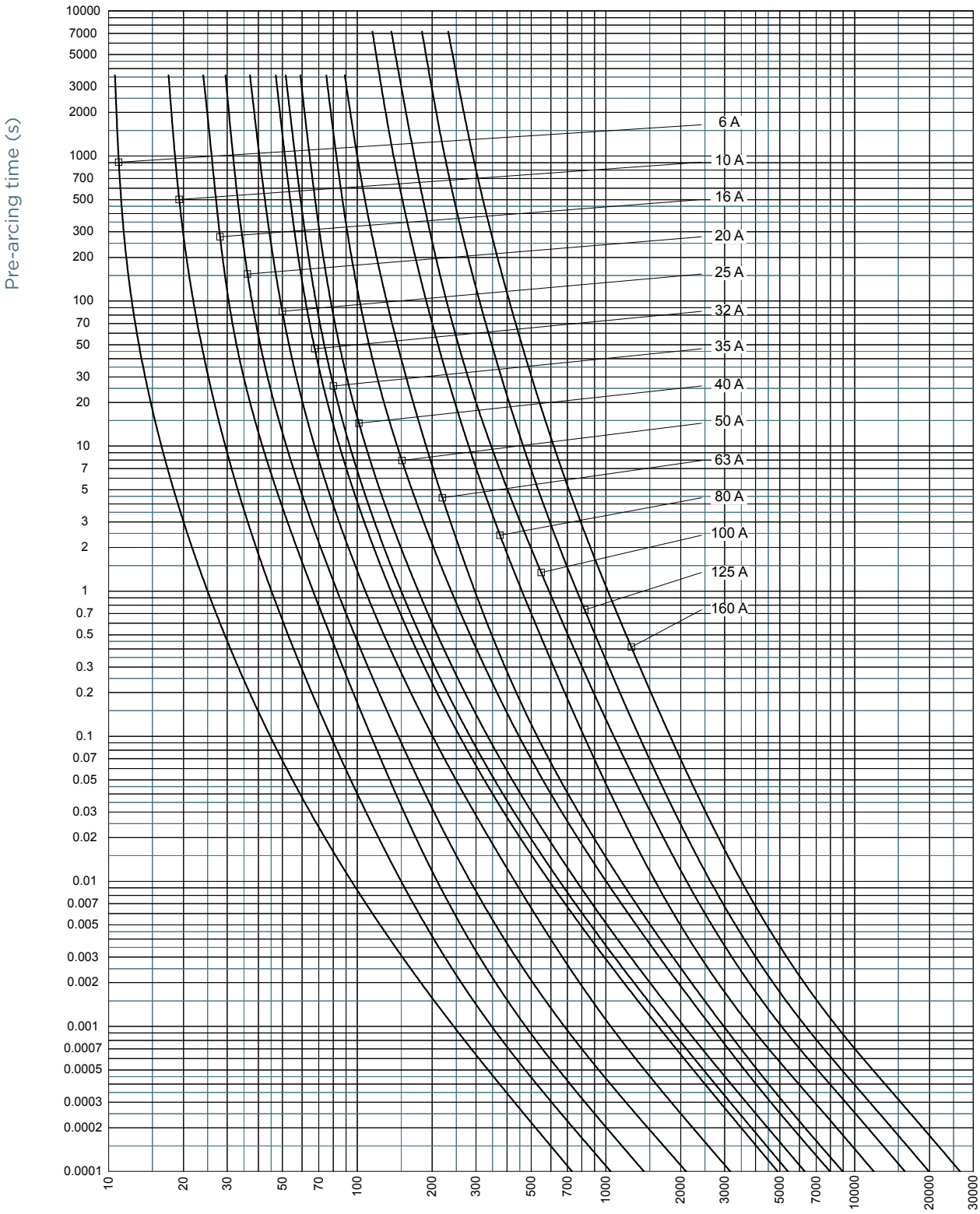

© 2021 Mersen. All rights reserved. Mersen reserves the right to change, adapt, limit or discontinue its products. Therefore the data provided herein are for information only and are not contractually binding. To ensure that Mersen provides the best solution to your needs, please contact and provide Mersen with all relevant technical specifications and conditions.

TIME CURRENT CHARACTERISTIC CURVES

Size 1

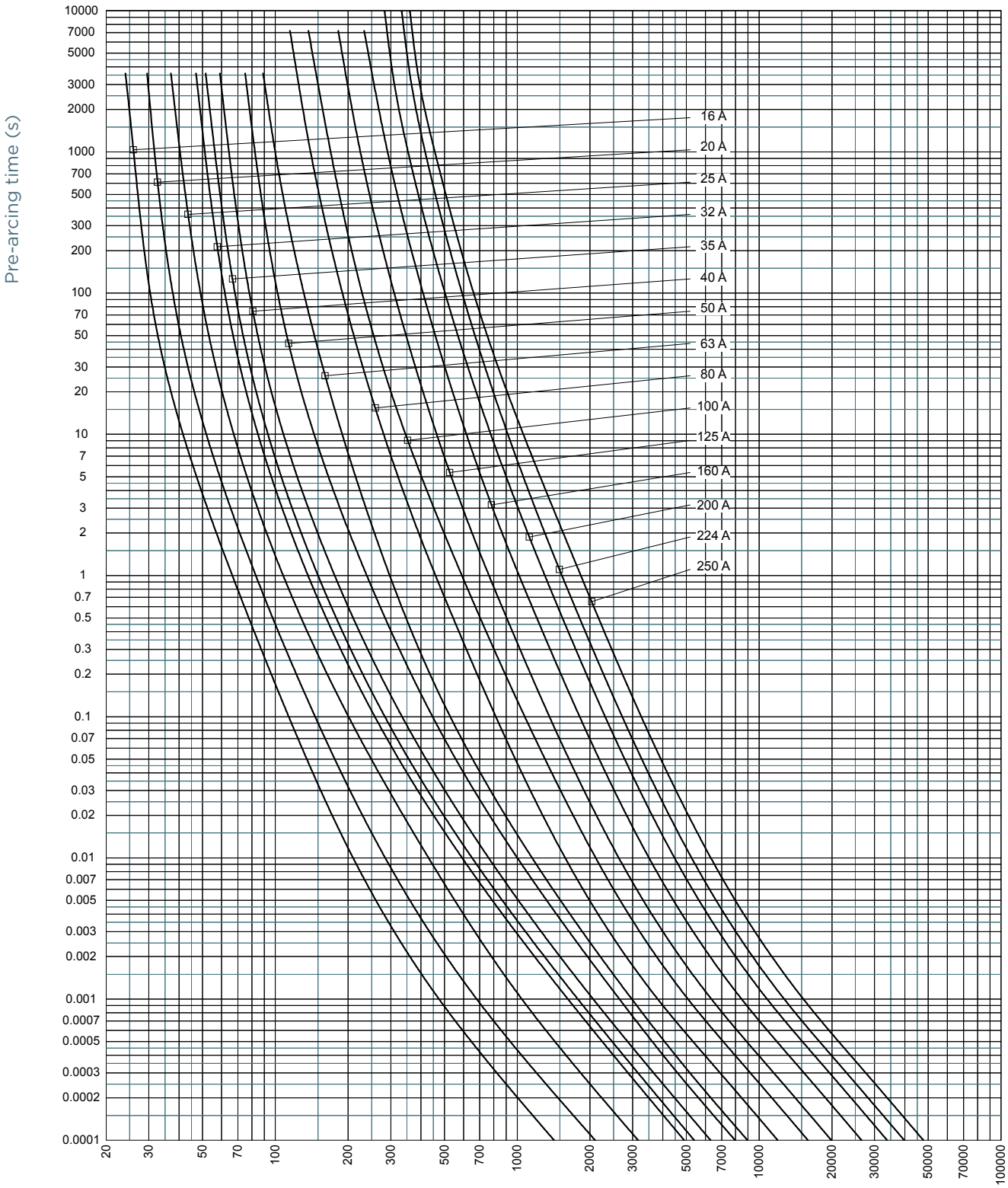

© 2021 Mersen. All rights reserved. Mersen reserves the right to change, adapt, limit or discontinue its products. Therefore the data provided herein are for information only and are not contractually binding. To ensure that Mersen provides the best solution to your needs, please contact and provide Mersen with all relevant technical specifications and conditions.

TIME CURRENT CHARACTERISTIC CURVES

Size 2

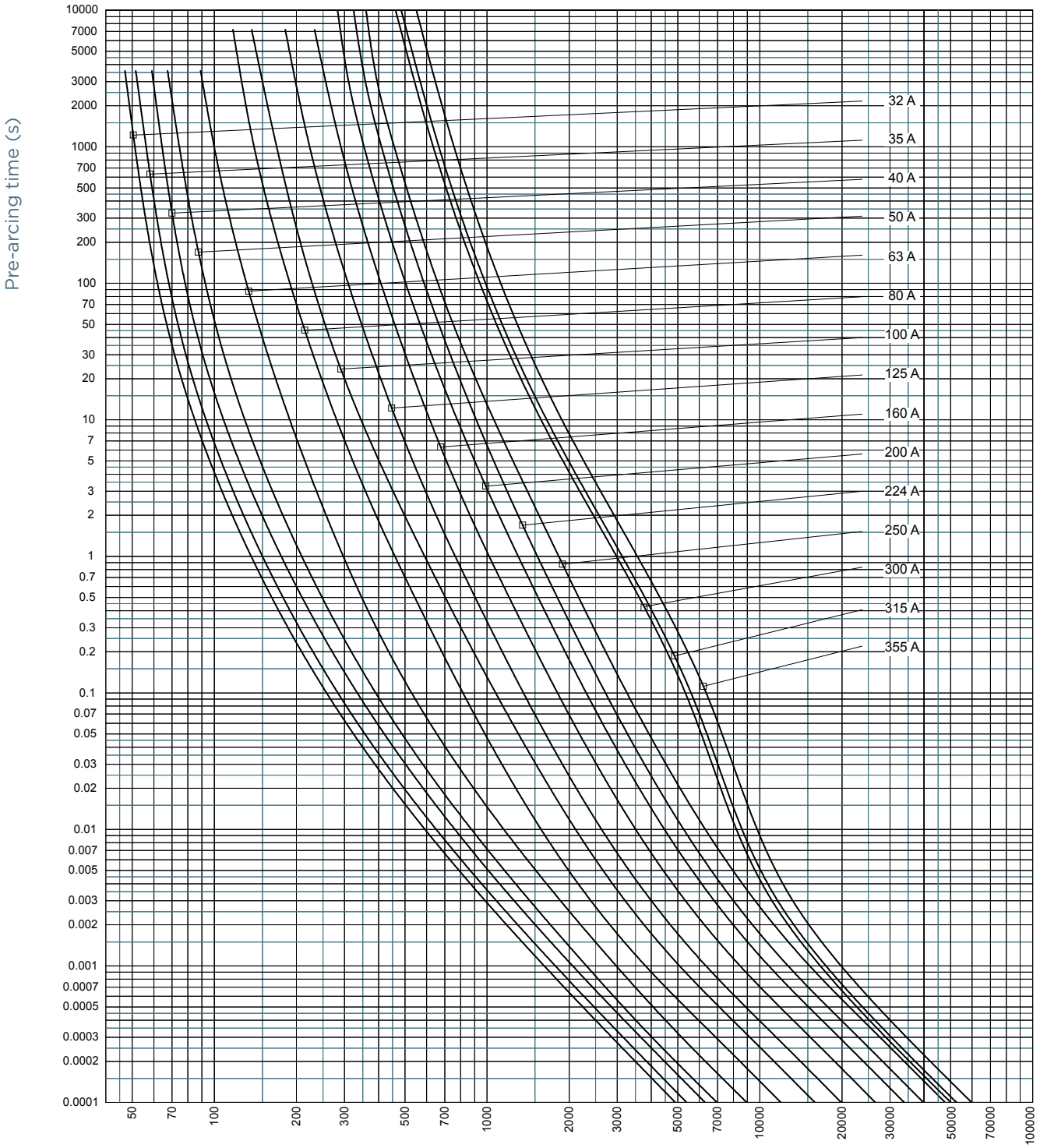

© 2021 Mersen. All rights reserved. Mersen reserves the right to change, adapt, limit or discontinue its products. Therefore the data provided herein are for information only and are not contractually binding. To ensure that Mersen provides the best solution to your needs, please contact and provide Mersen with all relevant technical specifications and conditions.

TIME CURRENT CHARACTERISTIC CURVES

Size 3

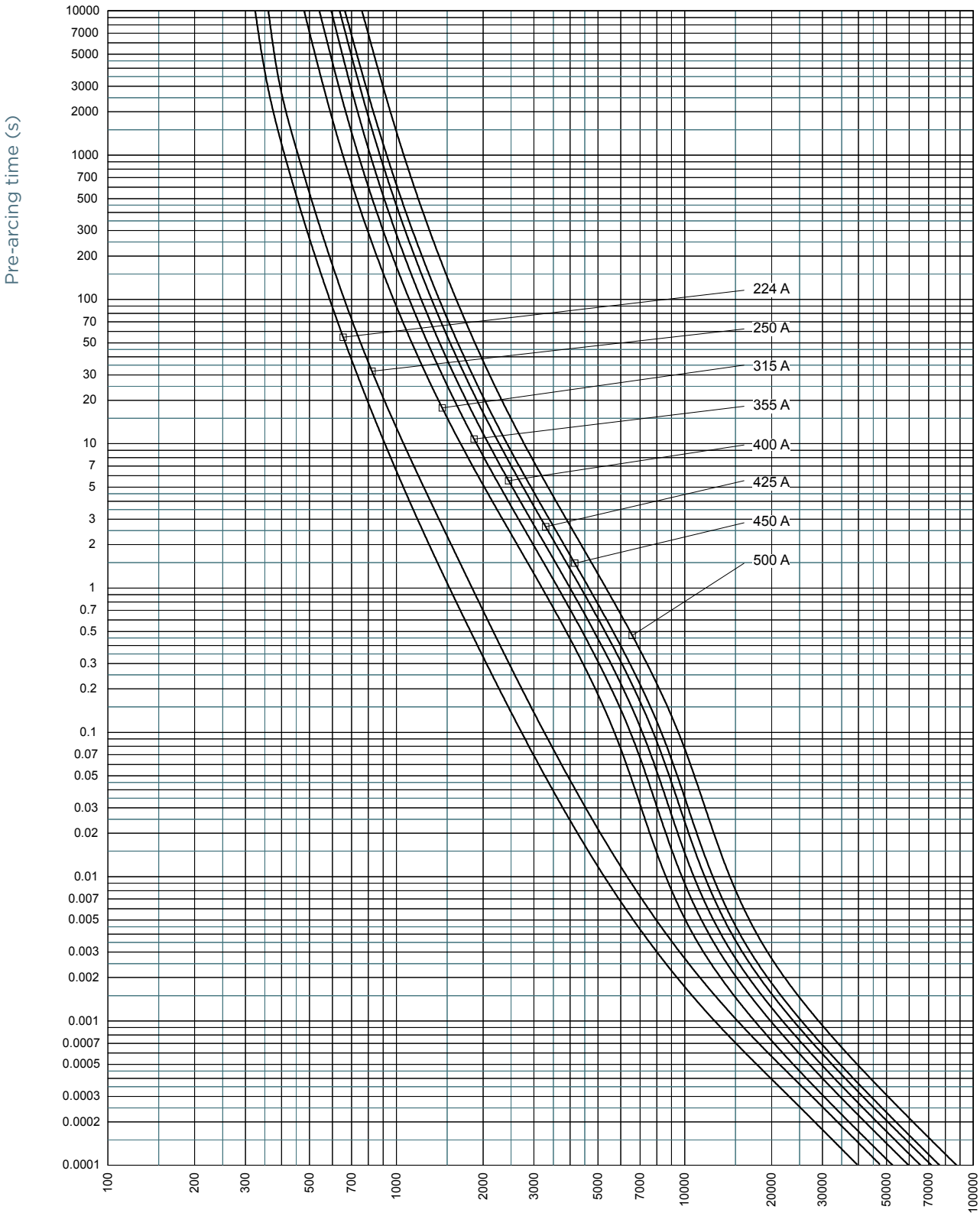

© 2021 Mersen. All rights reserved. Mersen reserves the right to change, adapt, limit or discontinue its products. Therefore the data provided herein are for information only and are not contractually binding. To ensure that Mersen provides the best solution to your needs, please contact and provide Mersen with all relevant technical specifications and conditions.

CUT-OFF CURRENT CHARACTERISTIC

Size 000

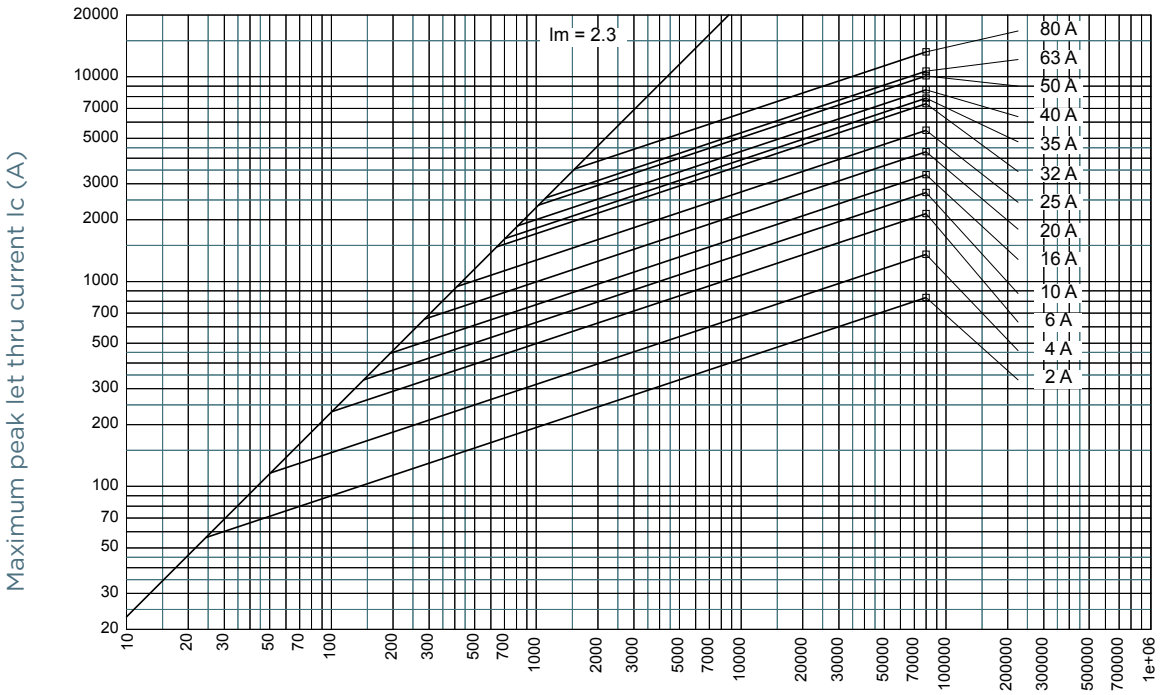

50 Hz RMS symmetrical prospective current Ip (A)

Size 00

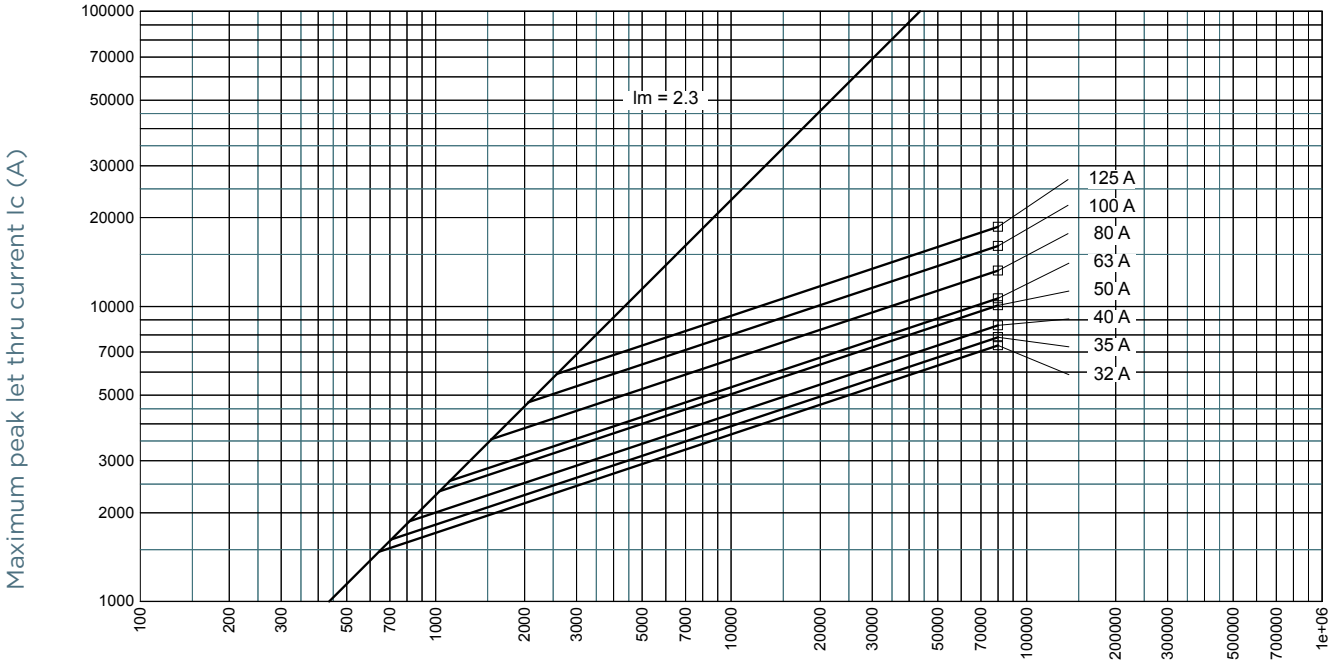

50 Hz RMS symmetrical prospective current Ip (A)

© 2021 Mersen. All rights reserved. Mersen reserves the right to change, adapt, limit or discontinue its products. Therefore the data provided herein are for information only and are not contractually binding. To ensure that Mersen provides the best solution to your needs, please contact and provide Mersen with all relevant technical specifications and conditions.

CUT-OFF CURRENT CHARACTERISTIC

Size 0

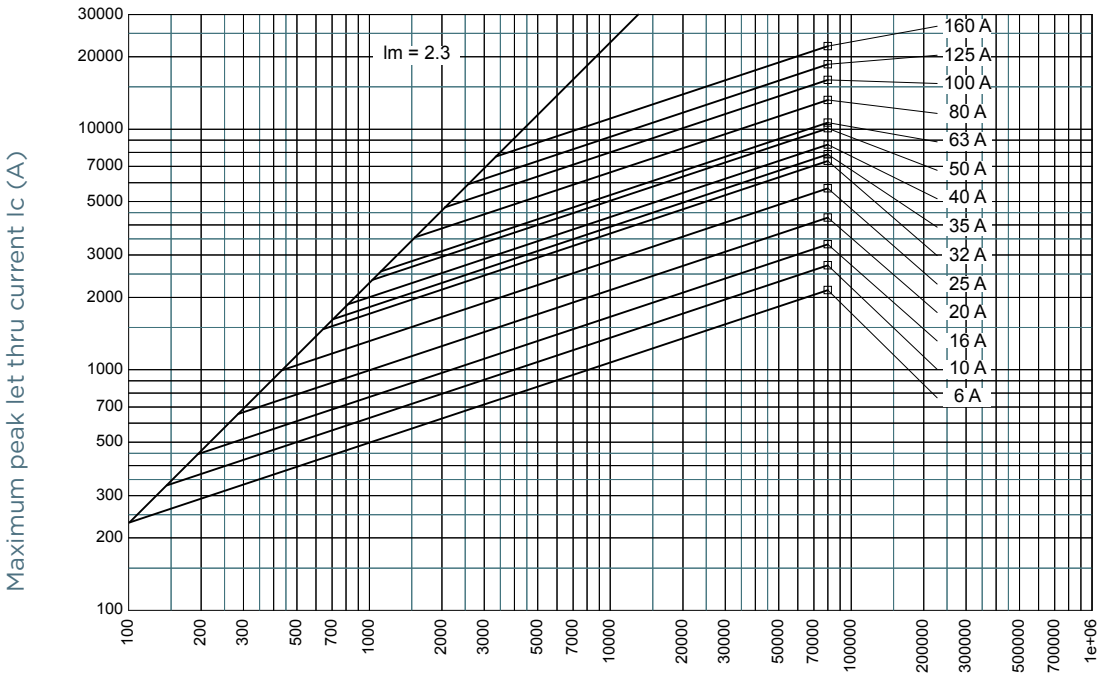

Size 1

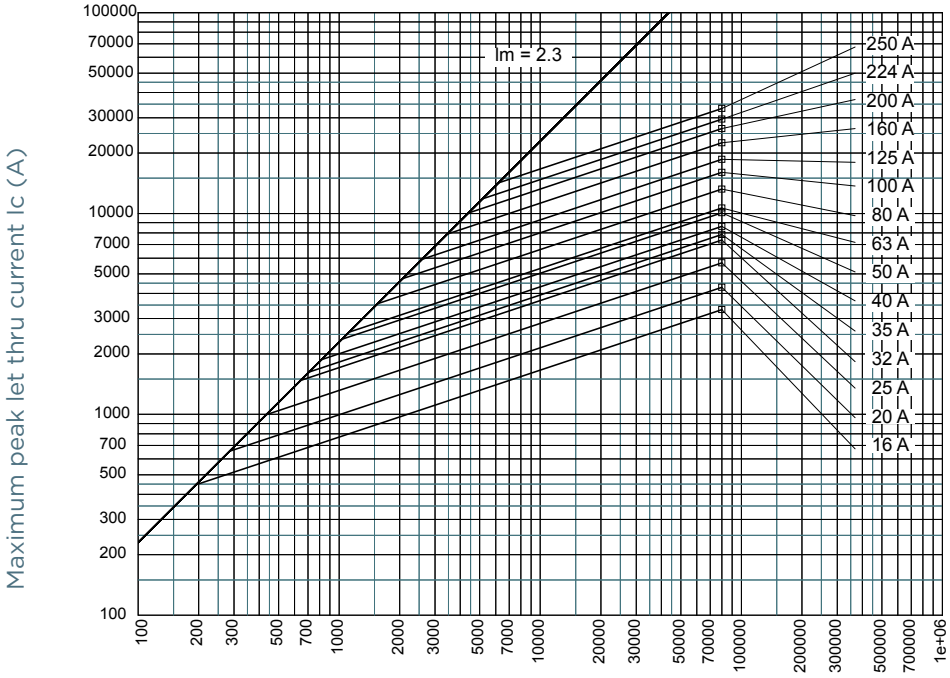

© 2021 Mersen. All rights reserved. Mersen reserves the right to change, adapt, limit or discontinue its products. Therefore the data provided herein are for information only and are not contractually binding. To ensure that Mersen provides the best solution to your needs, please contact and provide Mersen with all relevant technical specifications and conditions.

CUT-OFF CURRENT CHARACTERISTIC

Size 2

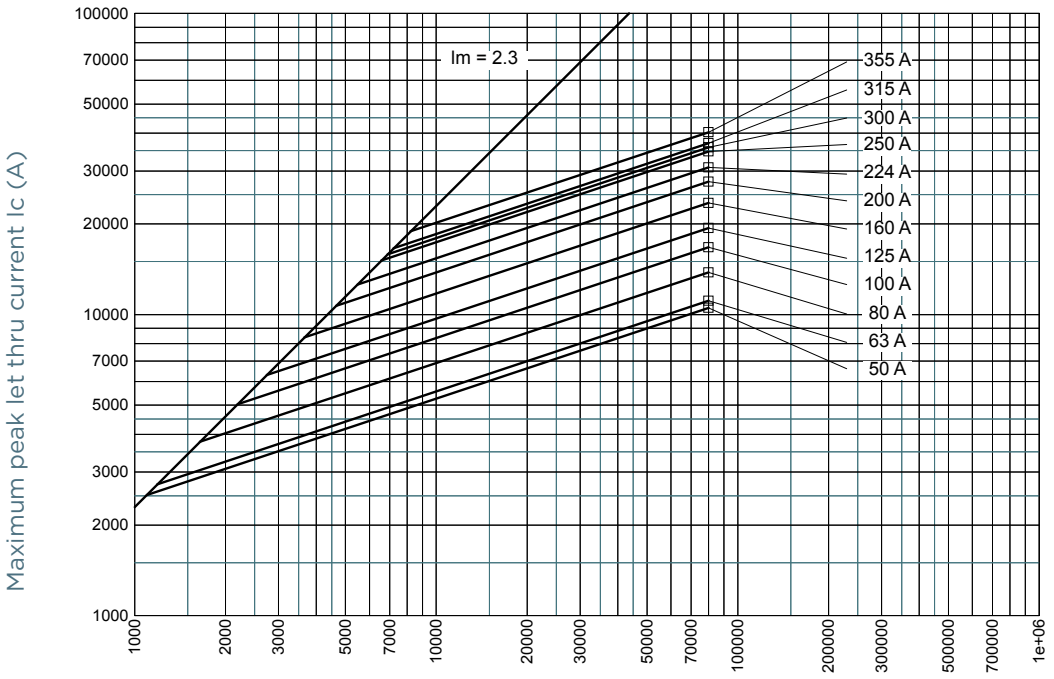

Size 3

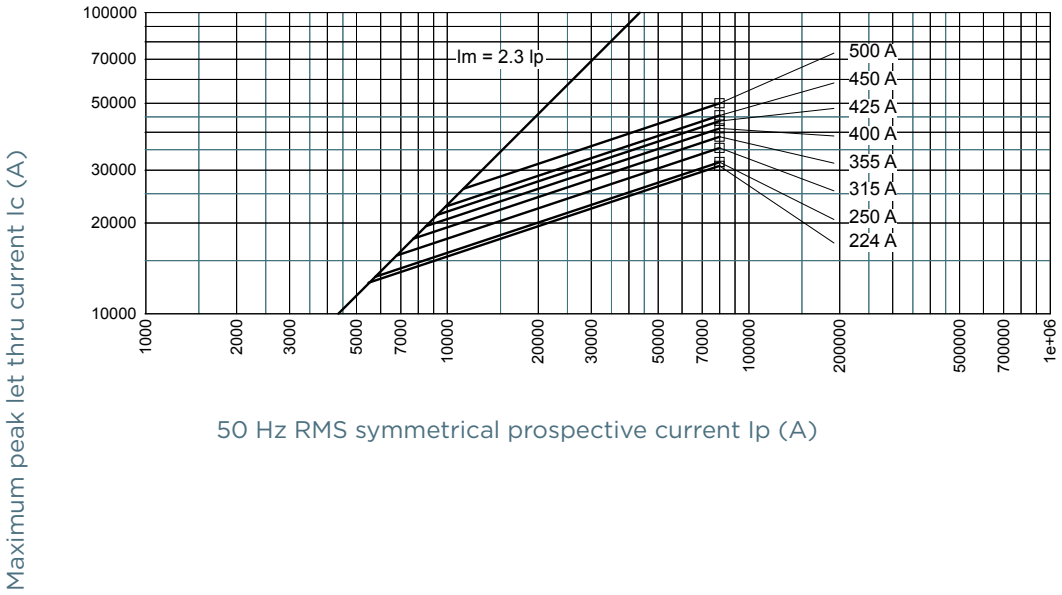

© 2021 Mersen. All rights reserved. Mersen reserves the right to change, adapt, limit or discontinue its products. Therefore the data provided herein are for information only and are not contractually binding. To ensure that Mersen provides the best solution to your needs, please contact and provide Mersen with all relevant technical specifications and conditions.

PRE-ARCING AND OPERATING I^2T CHARACTERISTICS

Size 000

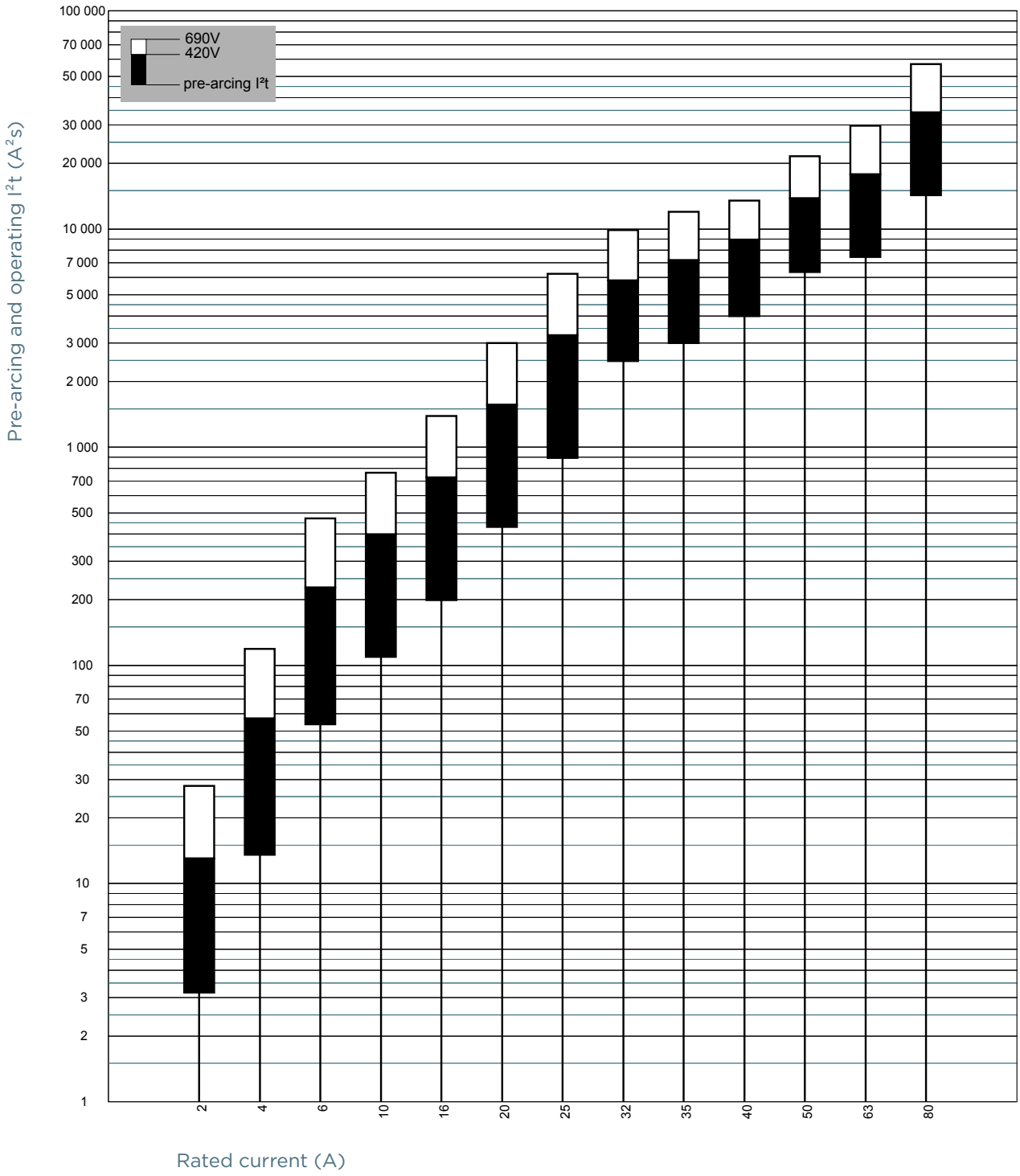

© 2021 Mersen. All rights reserved. Mersen reserves the right to change, adapt, limit or discontinue its products. Therefore the data provided herein are for information only and are not contractually binding. To ensure that Mersen provides the best solution to your needs, please contact and provide Mersen with all relevant technical specifications and conditions.

PRE-ARCING AND OPERATING I^2T CHARACTERISTICS

Size 00

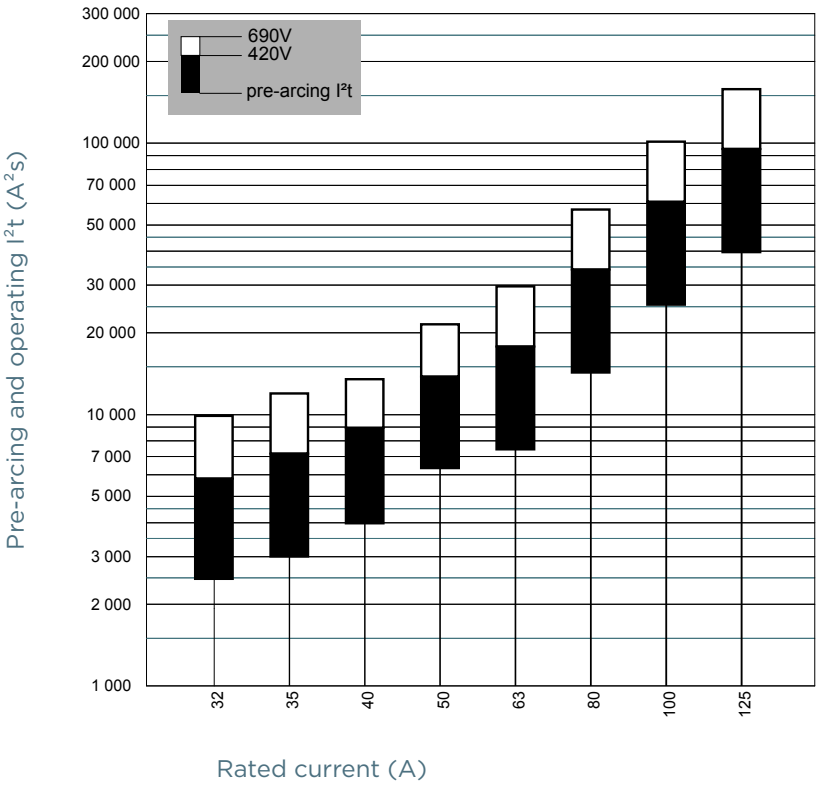

© 2021 Mersen. All rights reserved. Mersen reserves the right to change, adapt, limit or discontinue its products. Therefore the data provided herein are for information only and are not contractually binding. To ensure that Mersen provides the best solution to your needs, please contact and provide Mersen with all relevant technical specifications and conditions.

PRE-ARCING AND OPERATING I^2T CHARACTERISTICS

Size 0

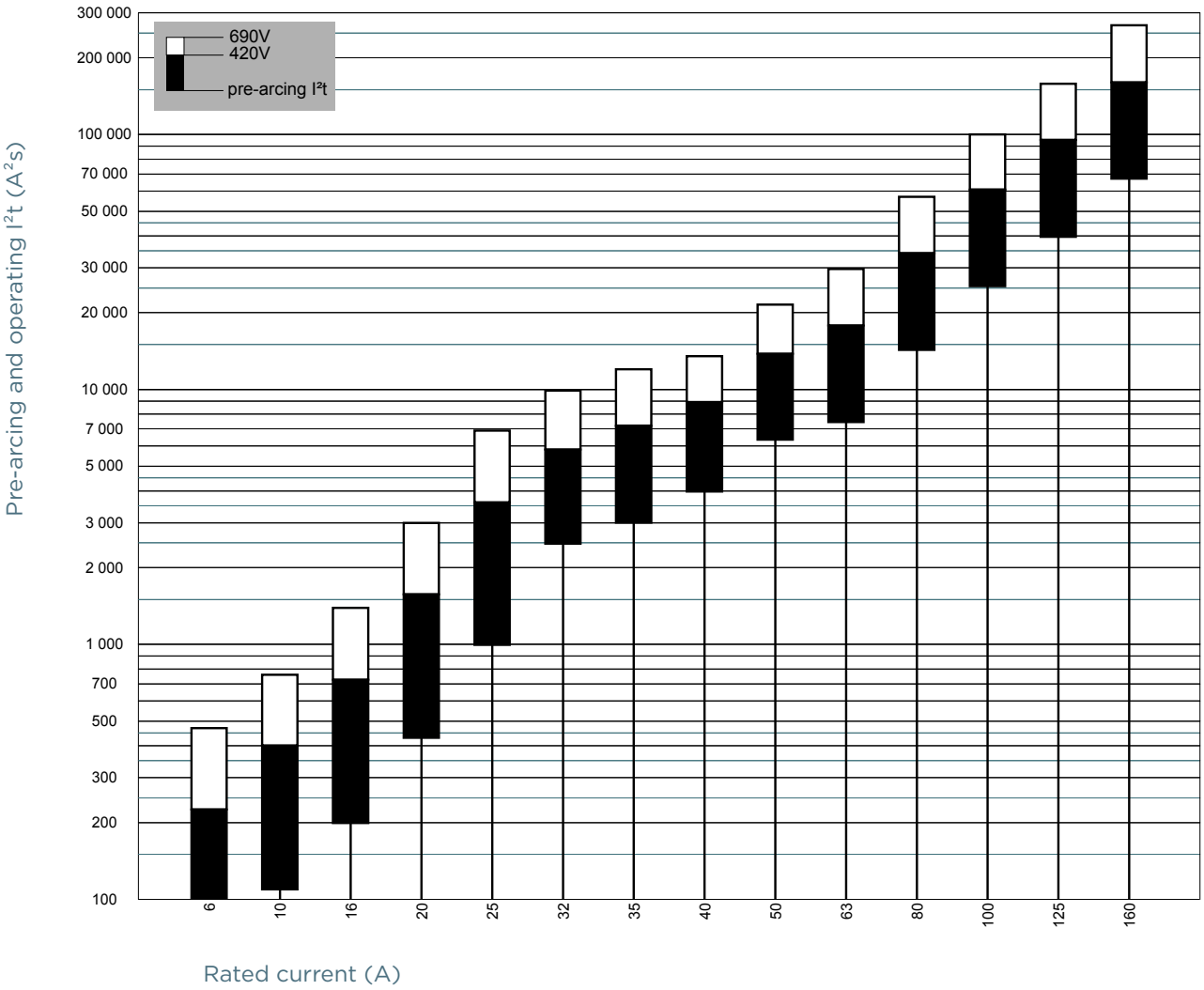

© 2021 Mersen. All rights reserved. Mersen reserves the right to change, adapt, limit or discontinue its products. Therefore the data provided herein are for information only and are not contractually binding. To ensure that Mersen provides the best solution to your needs, please contact and provide Mersen with all relevant technical specifications and conditions.

PRE-ARCING AND OPERATING I^2T CHARACTERISTICS

Size 1

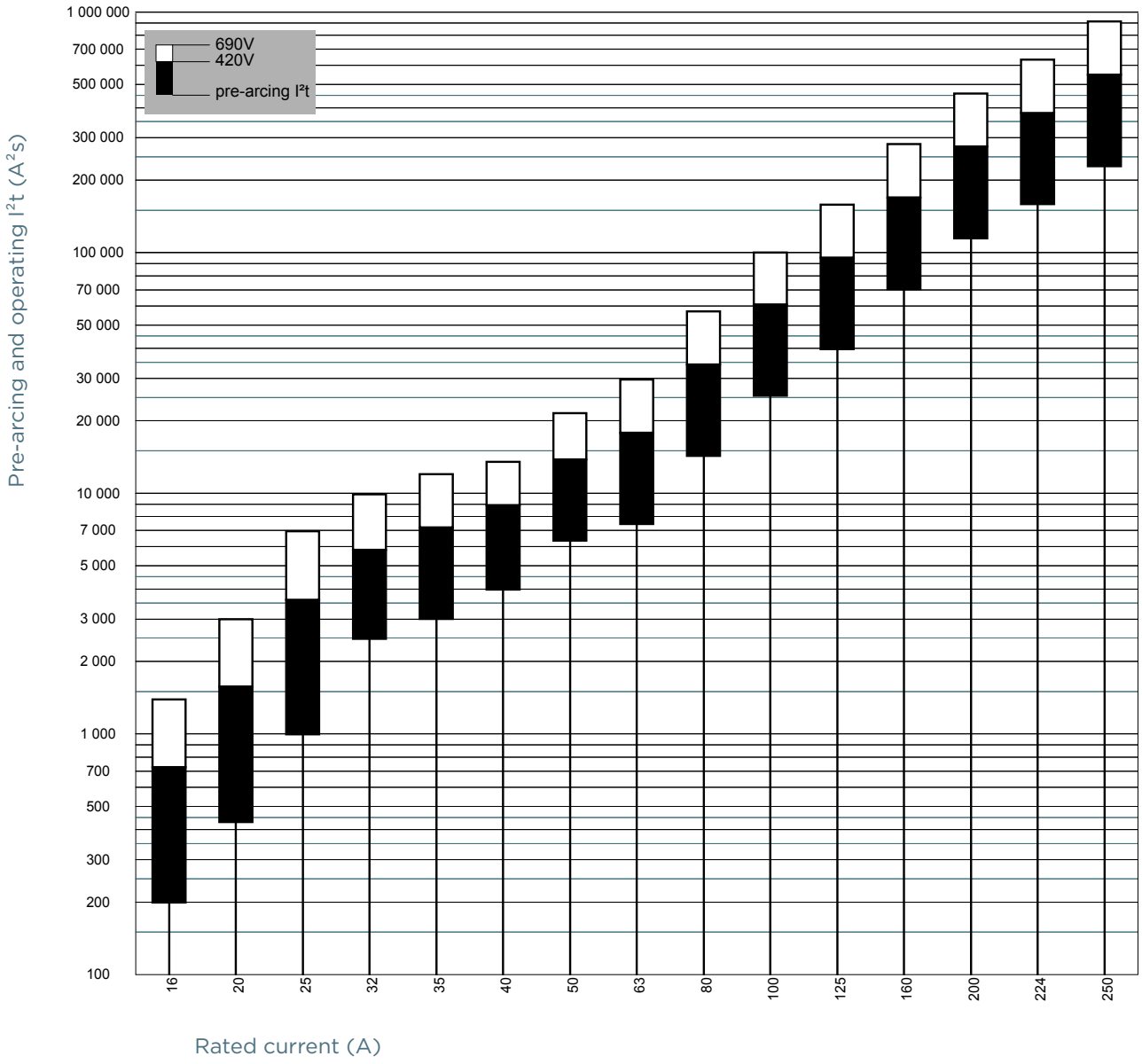

© 2021 Mersen. All rights reserved. Mersen reserves the right to change, adapt, limit or discontinue its products. Therefore the data provided herein are for information only and are not contractually binding. To ensure that Mersen provides the best solution to your needs, please contact and provide Mersen with all relevant technical specifications and conditions.

PRE-ARCING AND OPERATING I^2T CHARACTERISTICS

Size 2, 300 - 355A

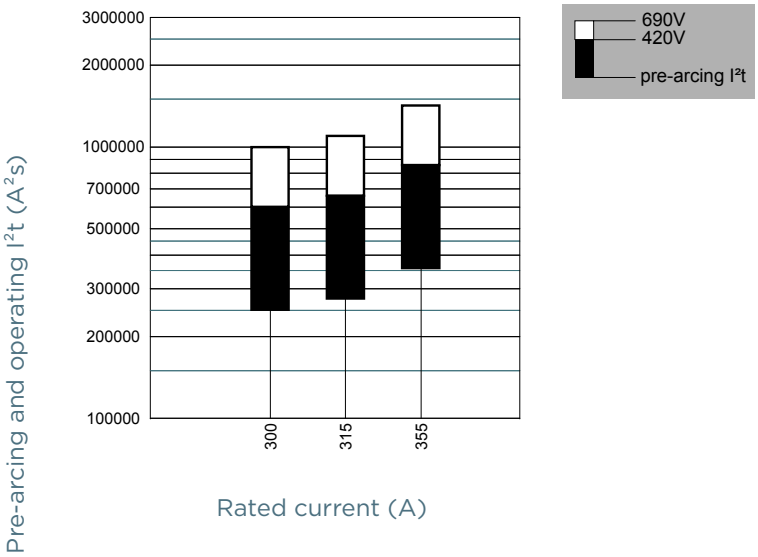

Size 2, 32 - 250A

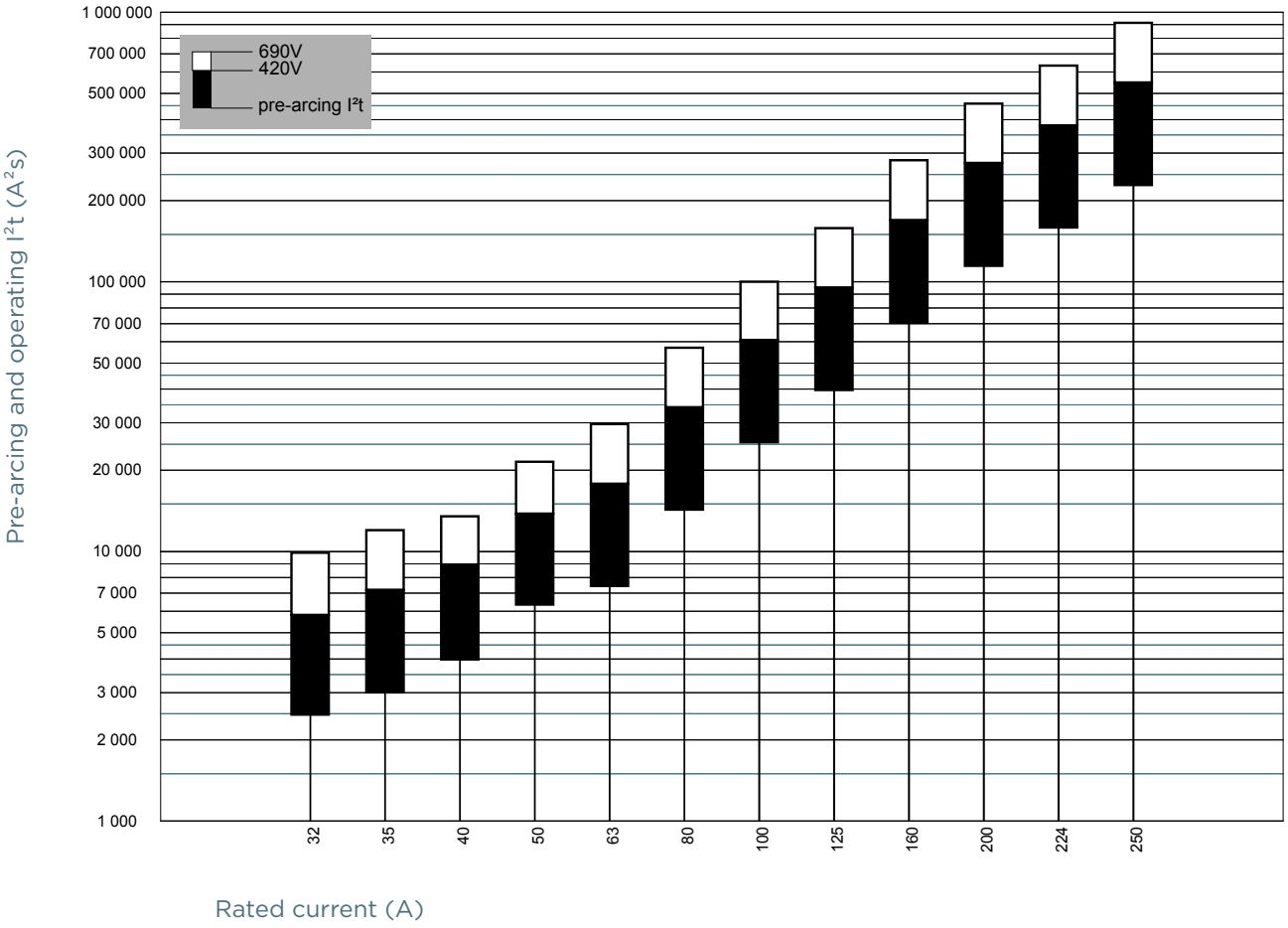

© 2021 Mersen. All rights reserved. Mersen reserves the right to change, adapt, limit or discontinue its products. Therefore the data provided herein are for information only and are not contractually binding. To ensure that Mersen provides the best solution to your needs, please contact and provide Mersen with all relevant technical specifications and conditions.

PRE-ARCING AND OPERATING I^2T CHARACTERISTICS

Size 3, 224 - 250A

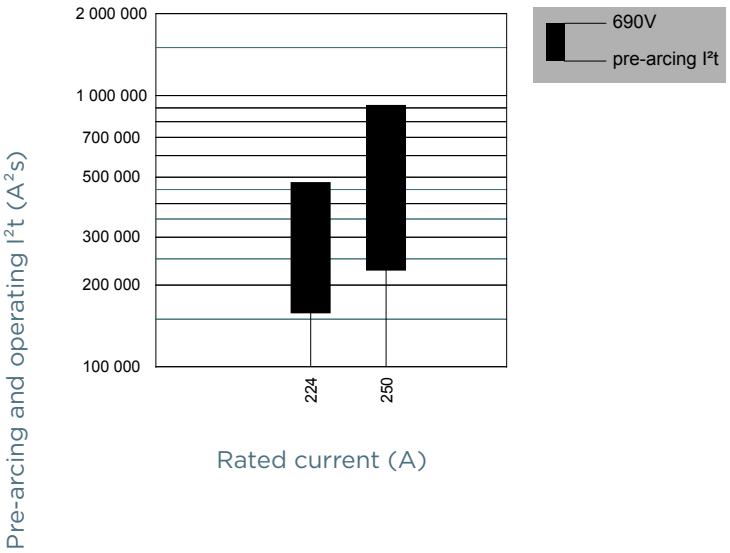

Size 3, 315 - 500A

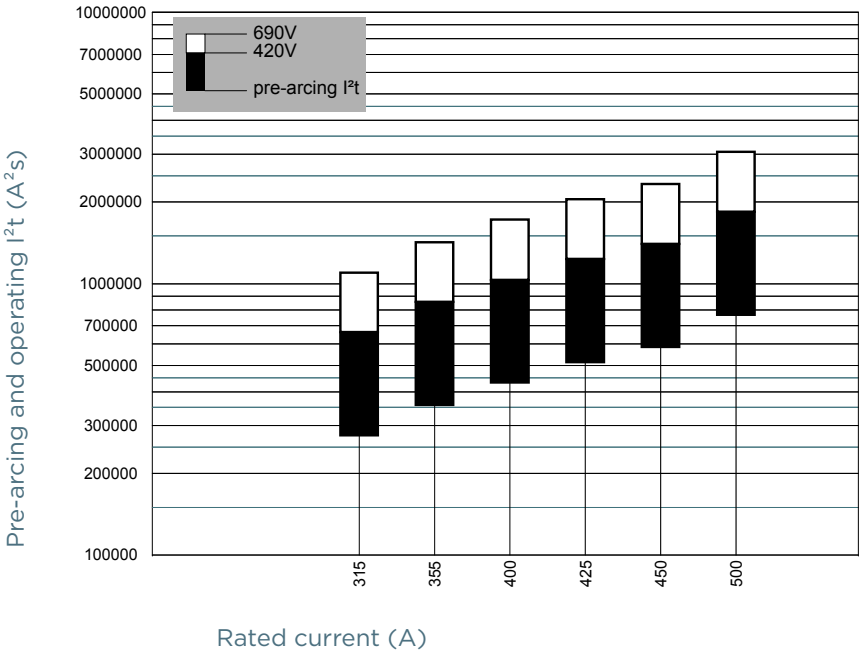

EP.MERSEN.COM

© 2021 Mersen. All rights reserved. Mersen reserves the right to change, adapt, limit or discontinue its products. Therefore the data provided herein are for information only and are not contractually binding. To ensure that Mersen provides the best solution to your needs, please contact and provide Mersen with all relevant technical specifications and conditions.

Expertise, our source of energy

DIMENSIONS

Size 000 with double indicator

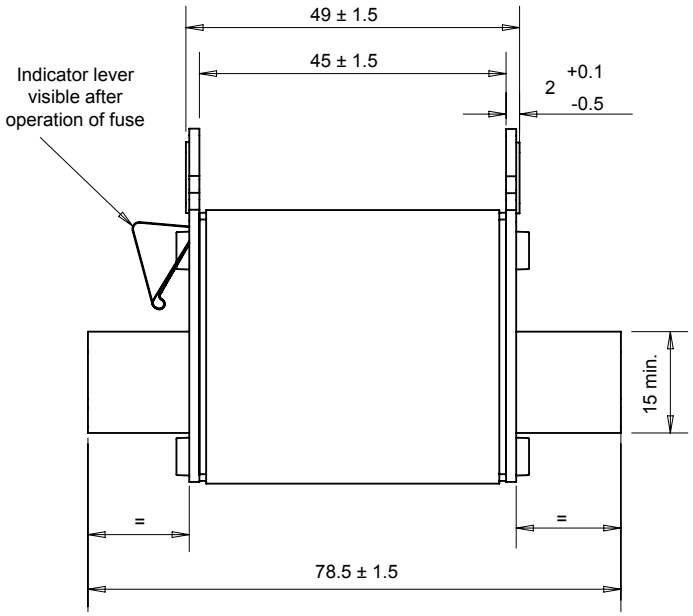

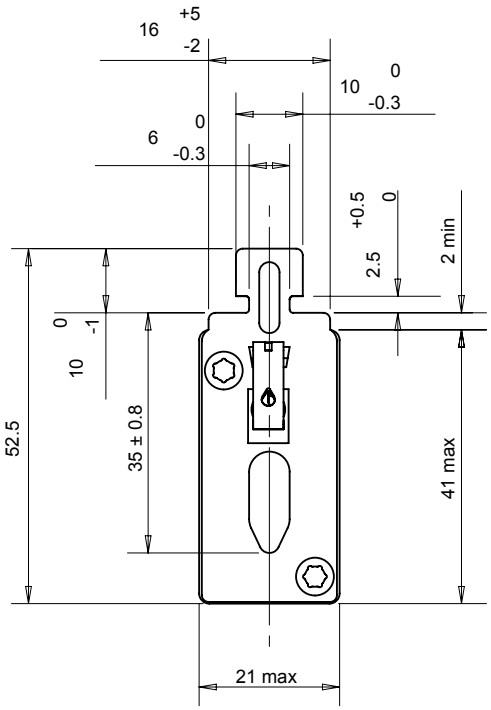

Visibility of red indicator signals conduction of the fuse-link.
After operation the red indicator is no longer visible

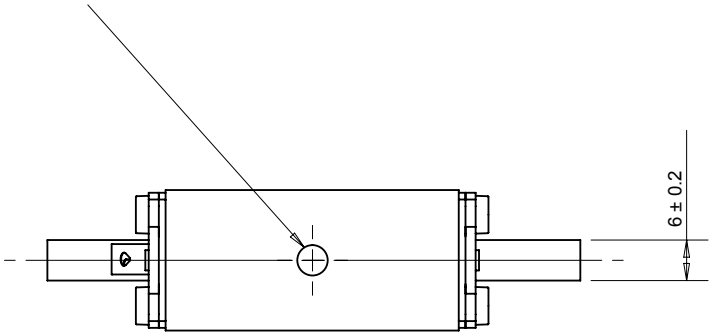

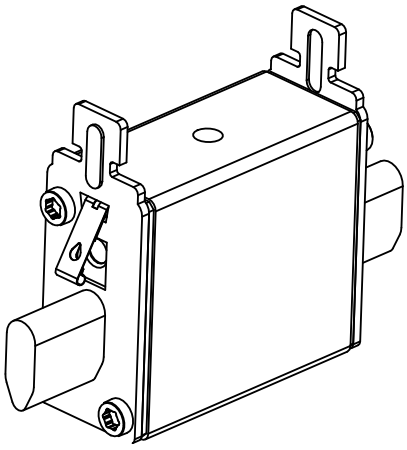

Dimensions in mm

© 2021 Mersen. All rights reserved. Mersen reserves the right to change, adapt, limit or discontinue its products. Therefore the data provided herein are for information only and are not contractually binding. To ensure that Mersen provides the best solution to your needs, please contact and provide Mersen with all relevant technical specifications and conditions.

DIMENSIONS

Size 00 with double indicator

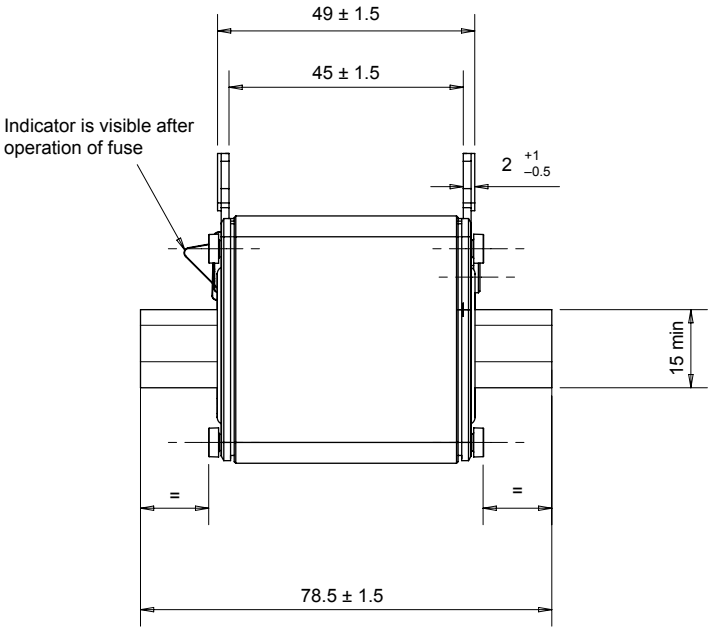

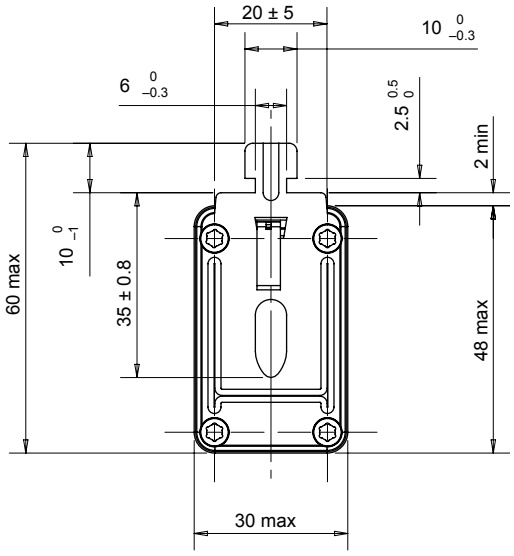

· Visibility of red indicator signals conduction of the fuse-link.
After operation the red indicator is no longer visible.

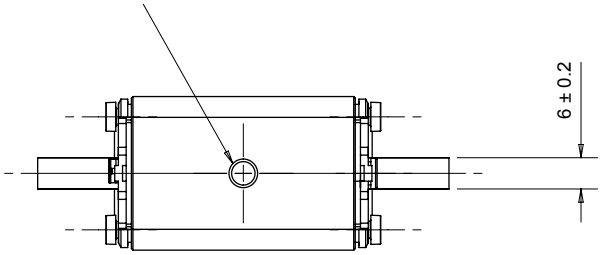

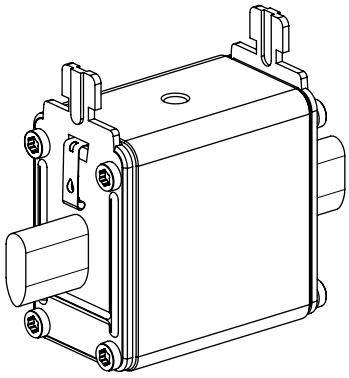

Dimensions in mm

© 2021 Mersen. All rights reserved. Mersen reserves the right to change, adapt, limit or discontinue its products. Therefore the data provided herein are for information only and are not contractually binding. To ensure that Mersen provides the best solution to your needs, please contact and provide Mersen with all relevant technical specifications and conditions.

DIMENSIONS

Size 0 with double indicator

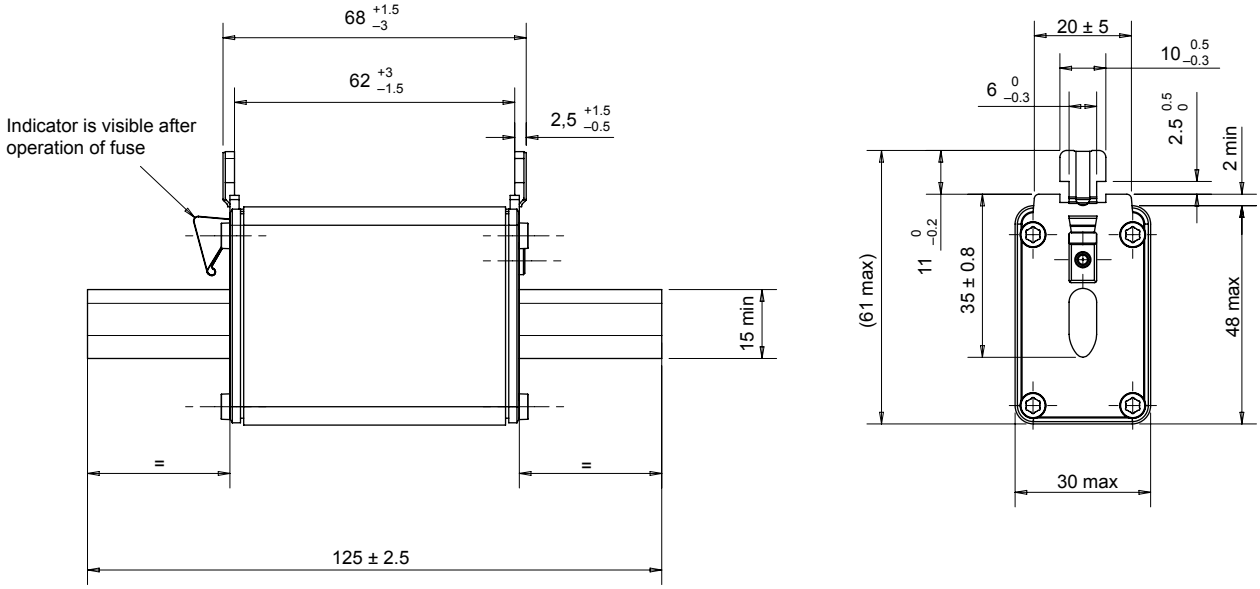

Visibility of red indicator signals conduction of the fuse-link.
After operation the red indicator is no longer visible.

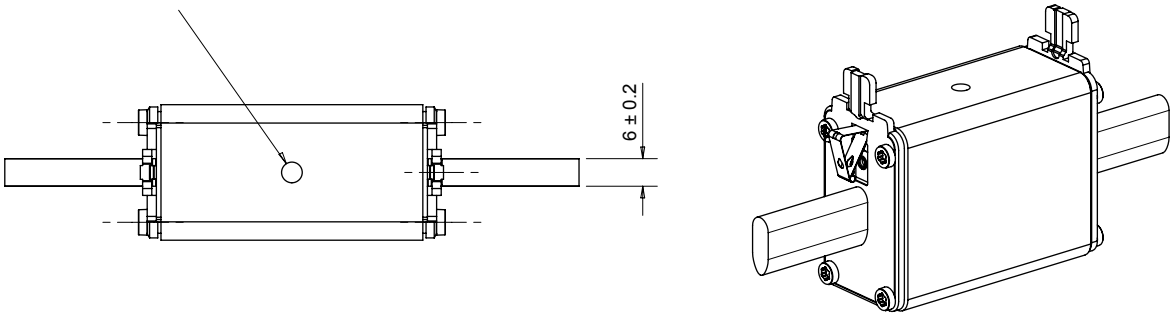

Dimensions in mm

© 2021 Mersen. All rights reserved. Mersen reserves the right to change, adapt, limit or discontinue its products. Therefore the data provided herein are for information only and are not contractually binding. To ensure that Mersen provides the best solution to your needs, please contact and provide Mersen with all relevant technical specifications and conditions.

DIMENSIONS

Size 1 compact with double indicator (16-100A)

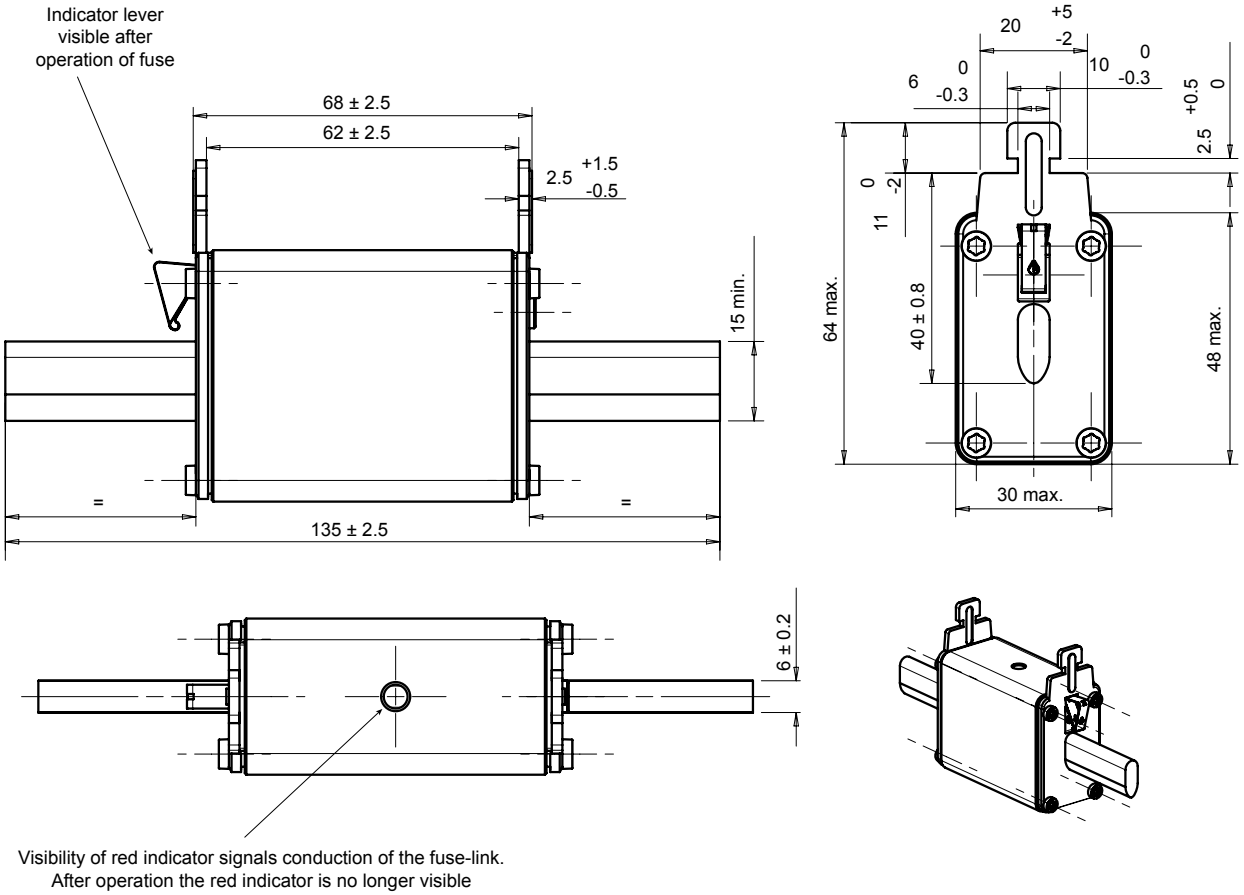

Dimensions in mm

© 2021 Mersen. All rights reserved. Mersen reserves the right to change, adapt, limit or discontinue its products. Therefore the data provided herein are for information only and are not contractually binding. To ensure that Mersen provides the best solution to your needs, please contact and provide Mersen with all relevant technical specifications and conditions.

DIMENSIONS

Size 1 with double indicator (125-250A)

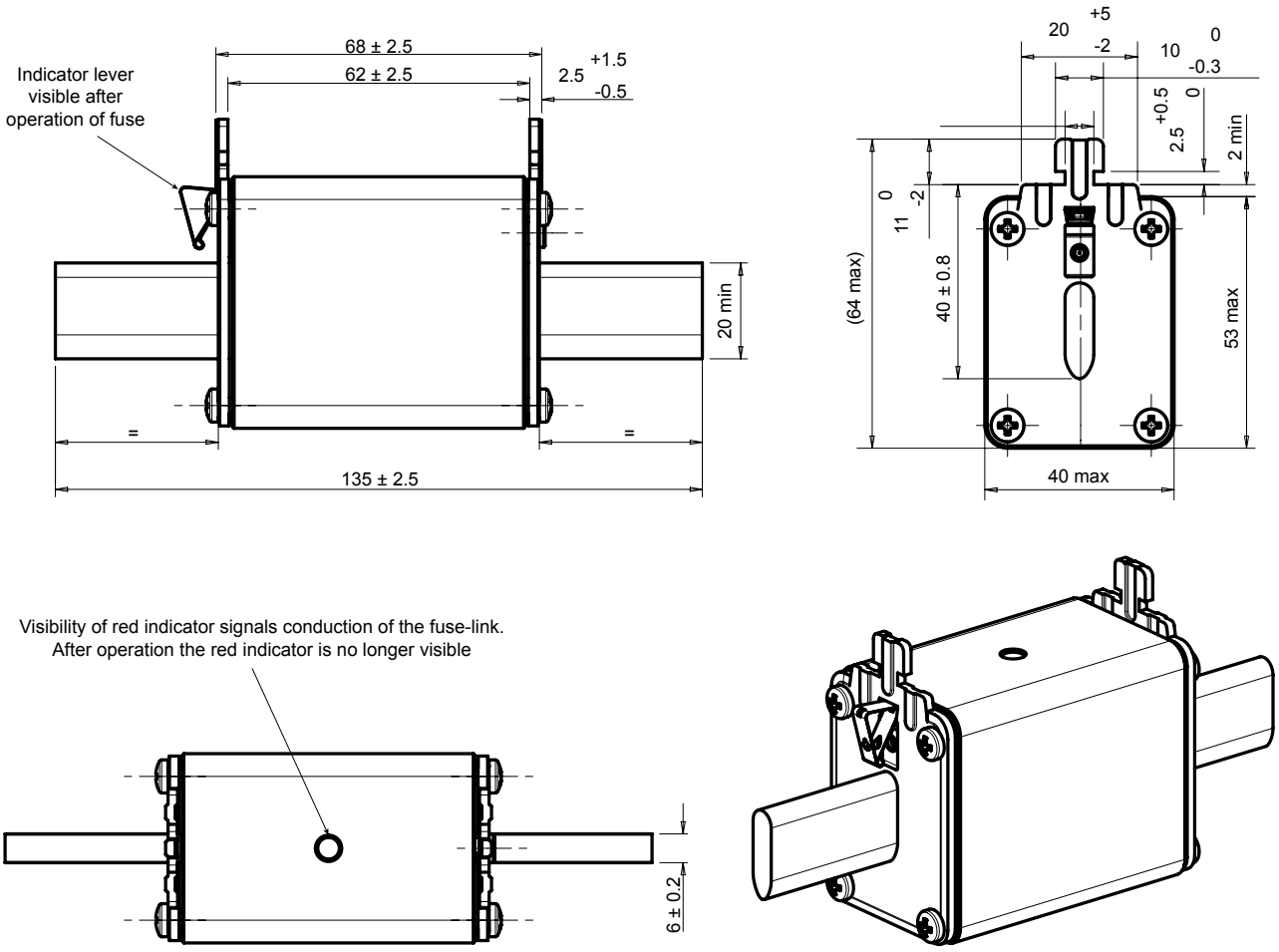

Dimensions in mm

© 2021 Mersen. All rights reserved. Mersen reserves the right to change, adapt, limit or discontinue its products. Therefore the data provided herein are for information only and are not contractually binding. To ensure that Mersen provides the best solution to your needs, please contact and provide Mersen with all relevant technical specifications and conditions.

DIMENSIONS

Size 2 compact with double indicator (32-250A)

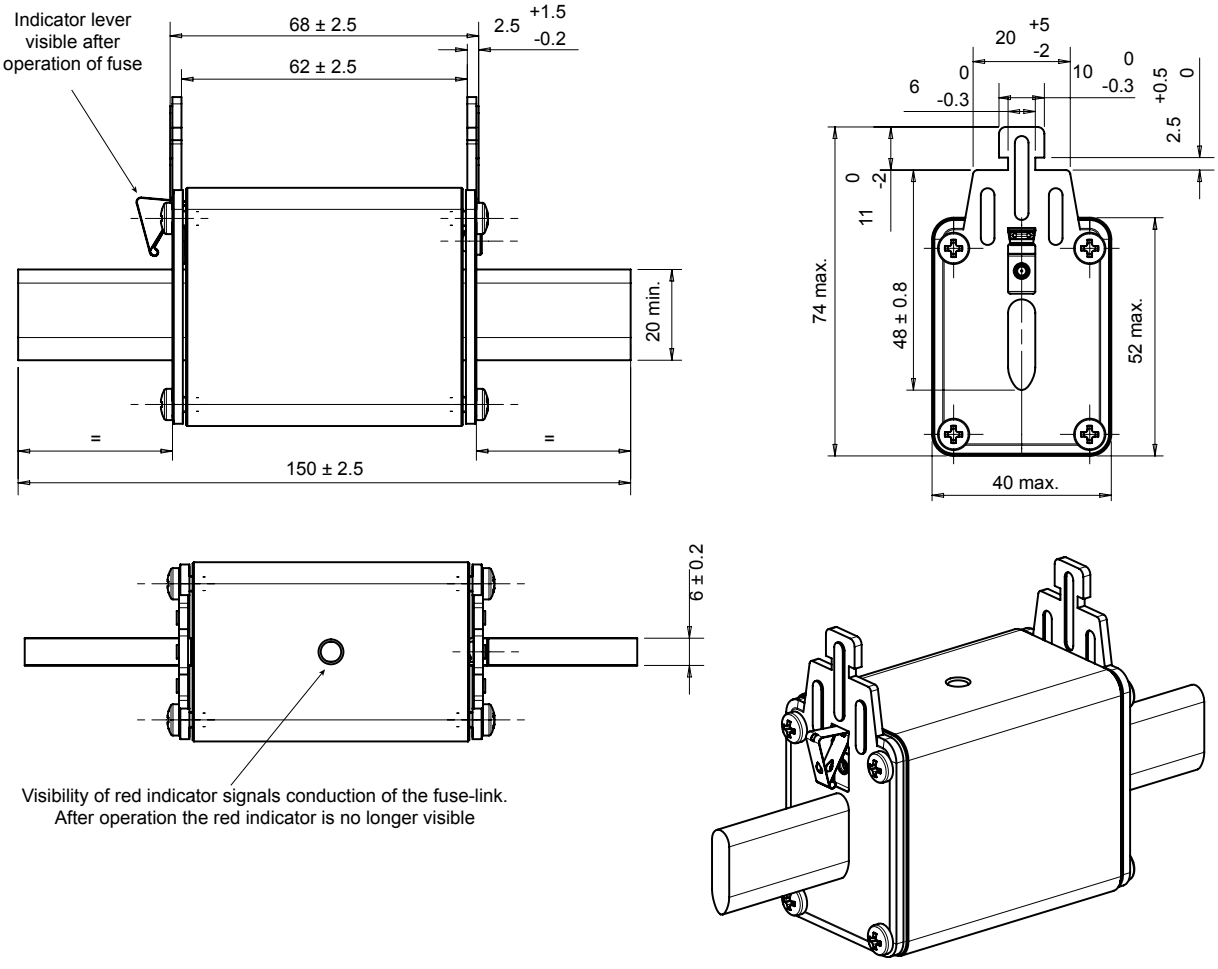

Dimensions in mm

© 2021 Mersen. All rights reserved. Mersen reserves the right to change, adapt, limit or discontinue its products. Therefore the data provided herein are for information only and are not contractually binding. To ensure that Mersen provides the best solution to your needs, please contact and provide Mersen with all relevant technical specifications and conditions.

DIMENSIONS

Size 2 with double indicator (300-355A)

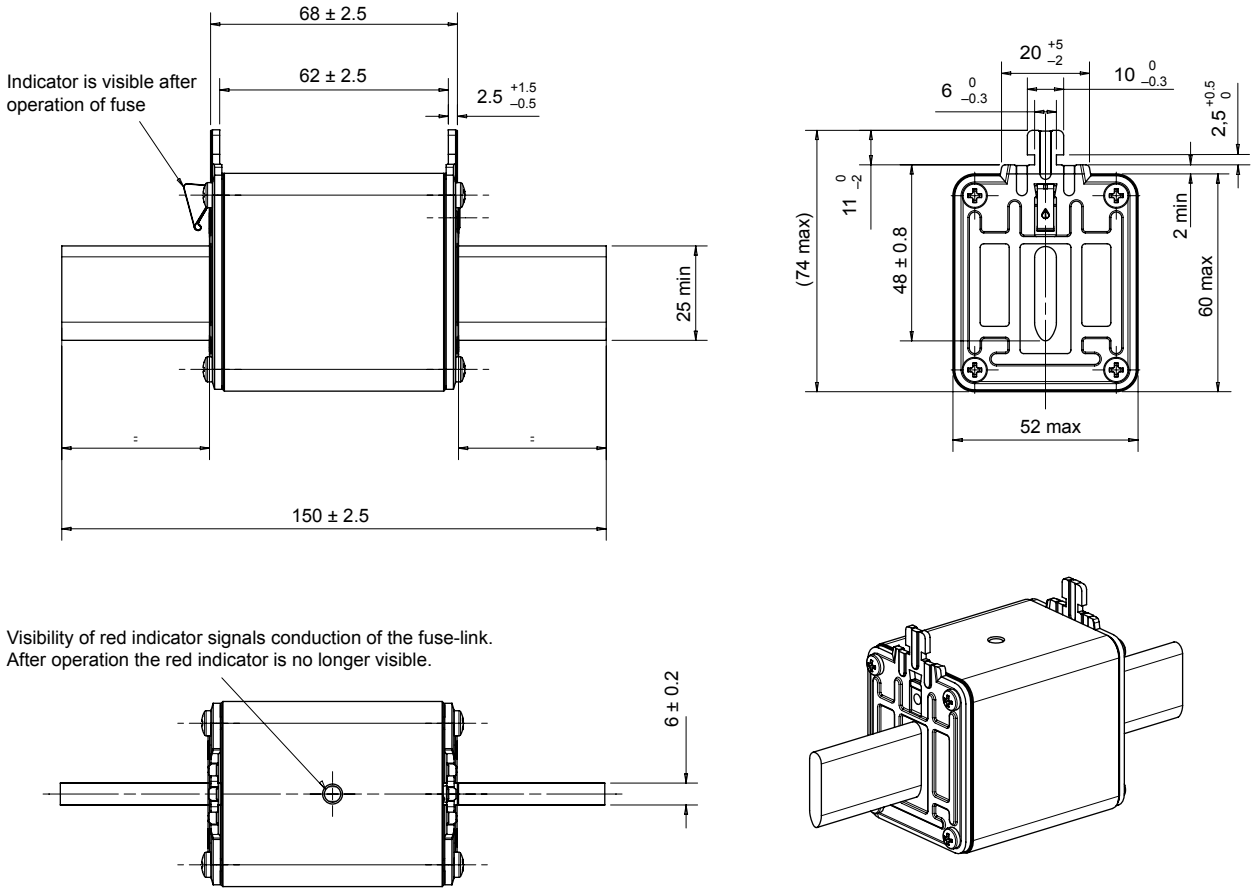

Dimensions in mm

© 2021 Mersen. All rights reserved. Mersen reserves the right to change, adapt, limit or discontinue its products. Therefore the data provided herein are for information only and are not contractually binding. To ensure that Mersen provides the best solution to your needs, please contact and provide Mersen with all relevant technical specifications and conditions.

DIMENSIONS

Size 3 compact with double indicator (250-355A)

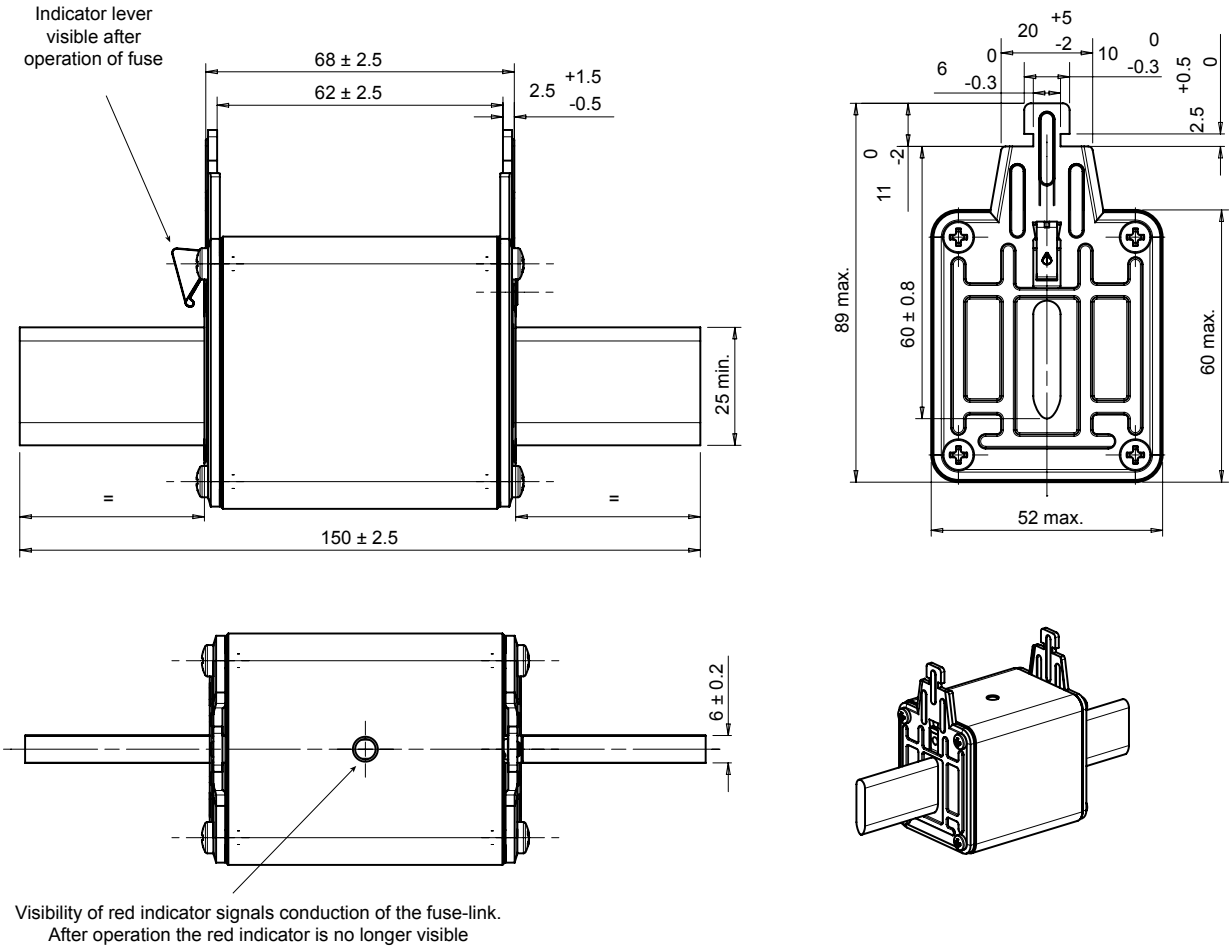

Dimensions in mm

© 2021 Mersen. All rights reserved. Mersen reserves the right to change, adapt, limit or discontinue its products. Therefore the data provided herein are for information only and are not contractually binding. To ensure that Mersen provides the best solution to your needs, please contact and provide Mersen with all relevant technical specifications and conditions.

DIMENSIONS

Size 3 with double indicator (400-500A)

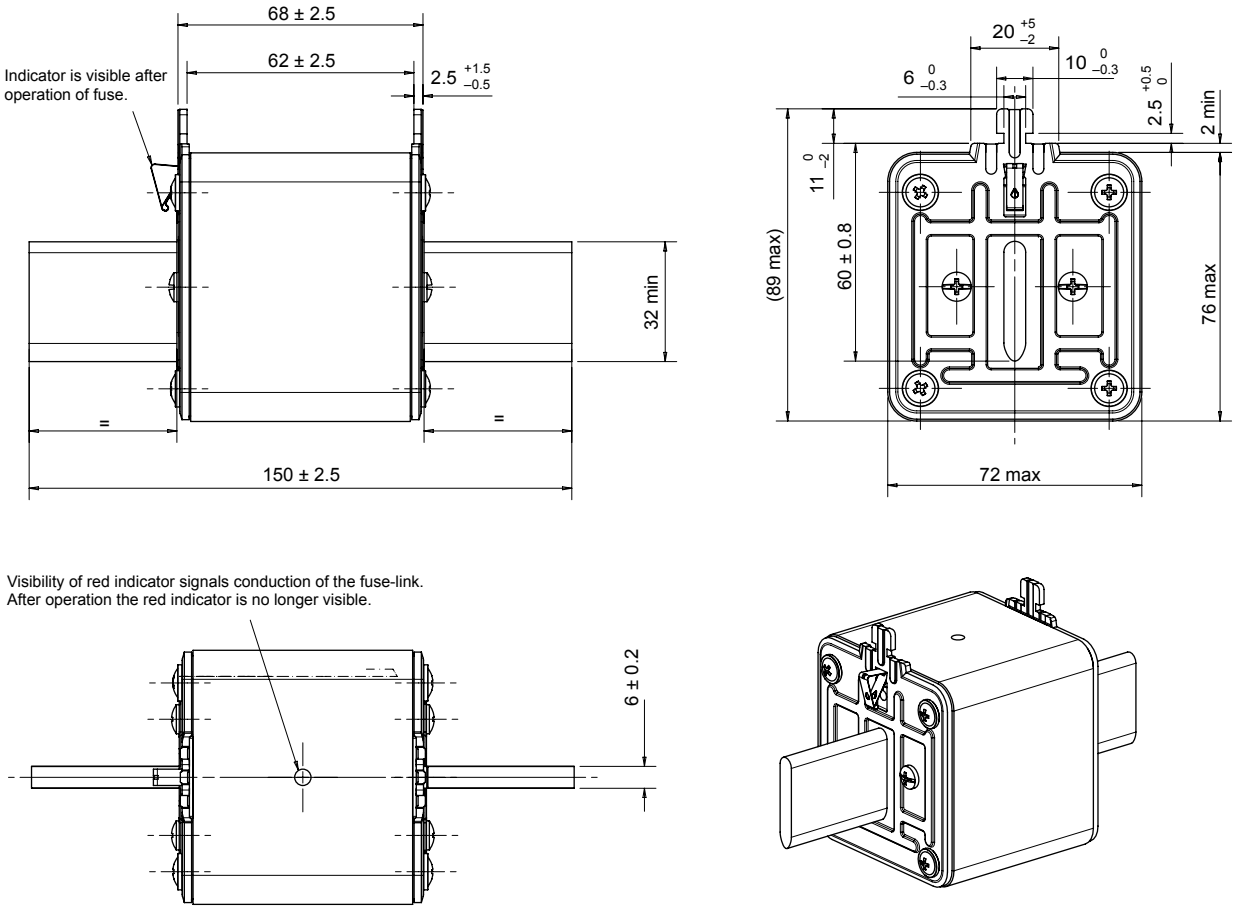

Dimensions in mm

© 2021 Mersen. All rights reserved. Mersen reserves the right to change, adapt, limit or discontinue its products. Therefore the data provided herein are for information only and are not contractually binding. To ensure that Mersen provides the best solution to your needs, please contact and provide Mersen with all relevant technical specifications and conditions.