19" chassis, steel sheet (Al/Zn)



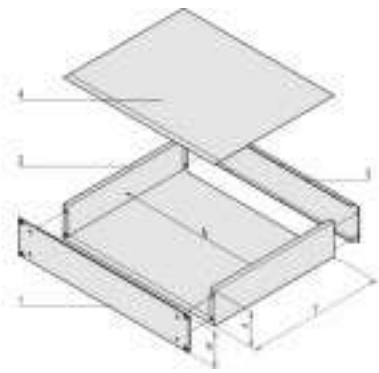

h = clear overall height (H - 3.0),
b = clear installation width = 447 mm

Article number: 20860-121

- Complete chassis, St (AlZn coated) with Al extrusion front panel
- Detachable rear panel for easy assembly
- 19" and ATX power supplies can be assembled in the 1 U version up to a clearance of 40 mm

Delivery comprises: kit

Item	Qty	Description
1	1	Front panel, Al extrusion, 2 mm, front anodised, rear etched (at 1 U), front and rear side of front panels colourless chromated (at 2 U)
2	1	Base body plain, St, 1 mm, (AlZn coated)
3	1	Rear panel, St, 1 mm (AlZn coated)
4	1	Cover plain, St, 1 mm (AlZn coated)
5	1	Assembly kit

Technical data:

Height H	H	Depth	Depth T
1 U	43.65 mm	280 mm	280 mm

Accessories:

Article number	Description
20860-256	Front handles

Notes: