

- **Adjustable and pre-set relative humidity**
- **Optical operating display (LED)**
- **High switching capacity**
- **Clip fixing**
- **Temperature-compensated**

The electronic hygrostat senses the relative humidity in an enclosure with electric/electronic components, and turns on a heater at the set point, helping prevent the formation of condensation in the enclosure. The LED integrated in the adjustment knob is lit when the connected heater is in operation.

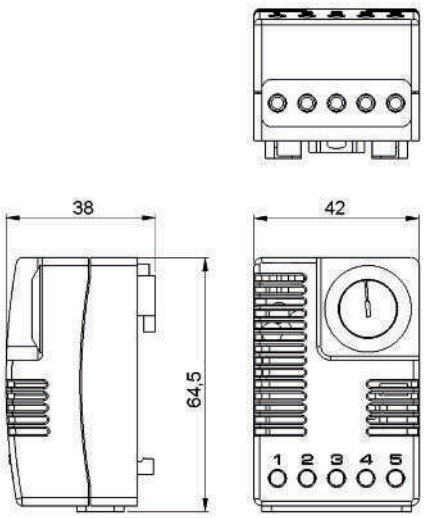

Technical Data

Switch difference	5% RH (± 3% RH tolerance) at 25°C/77°F (50% RH)
Reaction time	5 sec.
Contact type	change-over contact (relay)
Service life	> 50,000 cycles
Max. switching capacity (relay	240VAC, 8 (1.6) A
output)	120VAC, 8 (1.6) A
	24VDC, 4A
Optical indicator	LED
Connection	5-pole terminal, clamping torque 0.5Nm max.:
	rigid wire 2.5mm²
	stranded wire (with wire end ferrule) 1.5mm²
Mounting	clip for 35mm DIN rail, EN60715
Casing	plastic according to UL94 V-0, light grey
Dimensions	64.5 x 42 x 38mm
Weight	approx. 70g
Fitting position	vertical
Operating / Storage temperature	0 to +60°C (+32 to +140°F) / -20 to +70°C (-4 to +158°F)
Operating / Storage humidity	max. 90 % RH (non-condensing)
Protection type	IP20

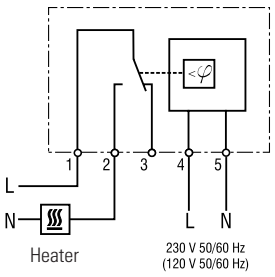

Connection diagram

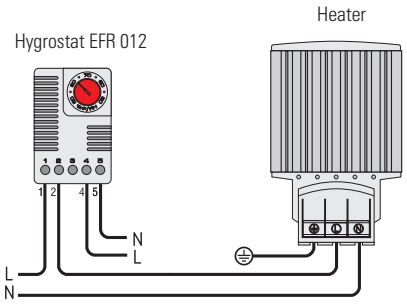

Example of connection

Art. No.	Operating voltage	Setting range	Approvals
01245.0-00	230VAC, 50/60Hz	40 to 90% RH	VDE + CSA-US
01246.0-00	230VAC, 50/60Hz	65% RH pre-set	VDE + CSA-US
01245.9-00	120VAC, 50/60Hz	40 to 90% RH	CSA-US
01246.9-00	120VAC, 50/60Hz	65% RH pre-set	CSA-US

Specifications are subject to change without notice. Errors and omissions excepted. Suitability of this product for its intended use and any associated risks must be determined by the end customer/ buyer in its final application. 04.08.2010