NEW

New Product Information

MOSFET Relay G3VM-201WR

P-SON Higher current type

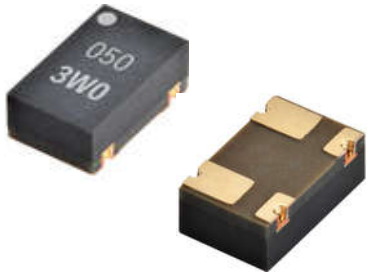

Nov. 2021
Relay Group
Diversified Products Division

ELECTRONIC AND MECHANICAL COMPONENTS COMPANY

OMRON

Value proposition

1 High current with small package

- High heat dissipation by improved terminal pad design
- Realized 1.5 times higher load current vs. existing product

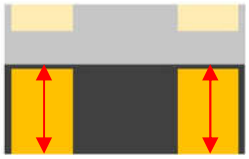

Bottom view of
G3VM-201WR terminal

2 Good solder joint and Solder visibility

- Improved terminal shape contribute good soldering

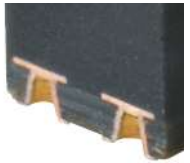

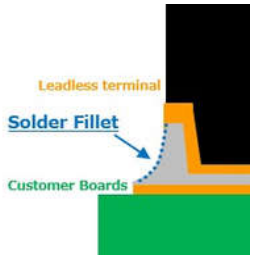

3 Small MOQ

- Provide flexibility by 500 pcs per taping reel packing

Feature of G3VM-201WR

New MOSFET Relay suitable for test & measurement applications

- Small size **P-SON** package
- High current **200V 0.35A** rating balancing with small size
- High ambient operating temperature range up to **+110°C**

Type name	**G3VM-201WR**
Package	P-SON* 4-pin
Contact form	SPST-NO (1a)
Load voltage max. (V_{OFF})	**200V**
Continuous load current Max. (I_O)	**0.35A**
Pulse ON current (Iop) t=100ms, Duty=1/10	**1.05A**
Resistance with Output ON Typ. (R_{ON})	4.5Ω
Capacitance between output terminal Typ.(C_{OFF})	75pF
Trigger LED forward current Max. (I_{FT})	3.0mA
Turn-ON Time Max. (t_{ON})	1ms
Turn-OFF Time Max. (t_{OFF})	1ms
Dielectric strength between I/O (V_{I-O}) **	500Vrm
Ambient operating temperature (Ta)	**-40 to +110℃**

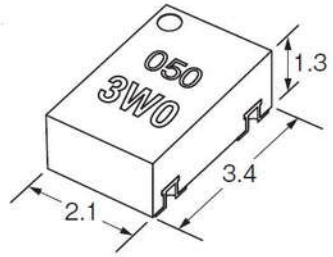

* Power – Small Outline Non-Leaded

**AC peak/DC

Product portfolio

New High voltage lineup of P-SON G3VM-□WR series

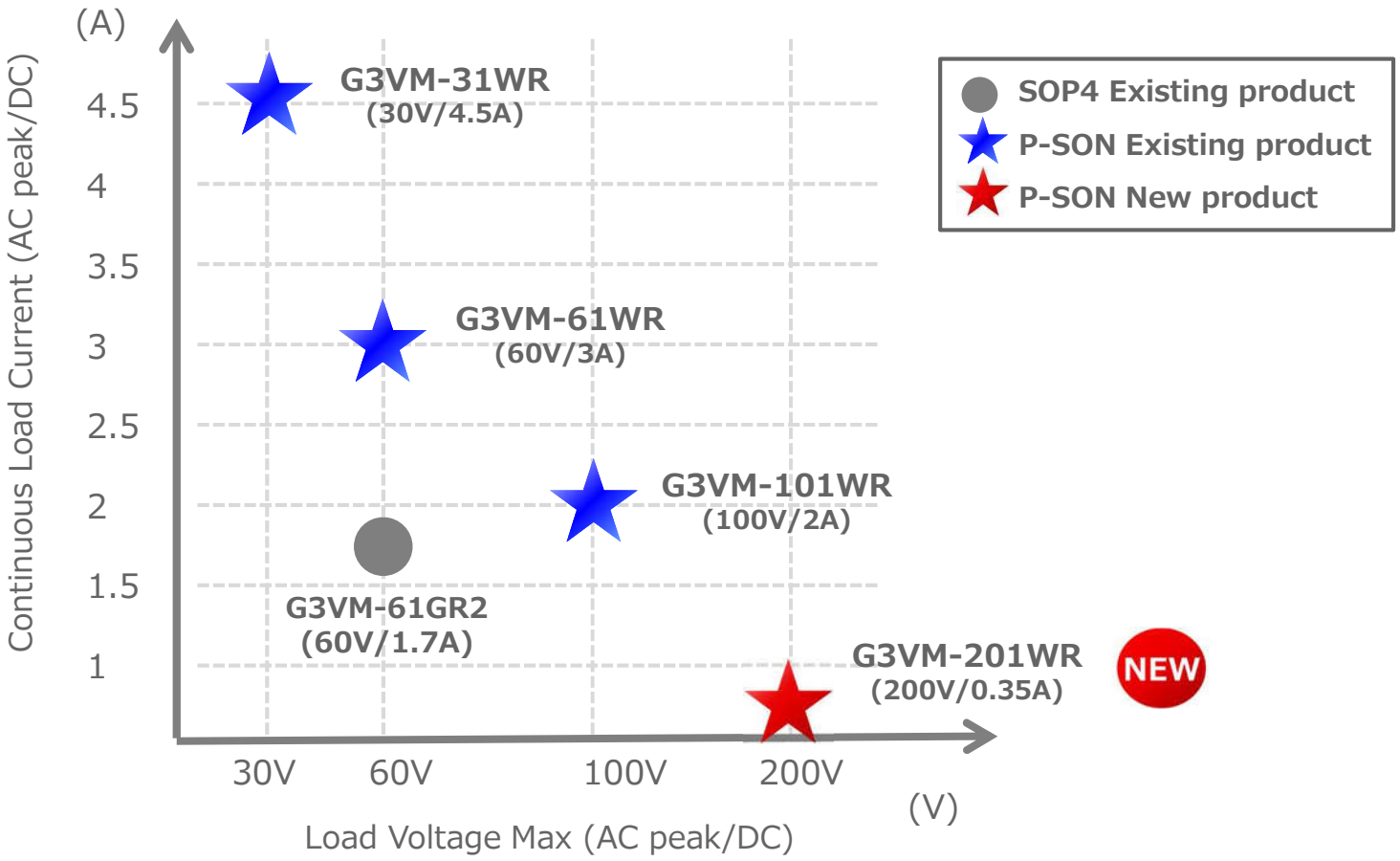

High current feature

- **G3VM-201WR realized ≥1.5 times higher current vs. SOP4 type**
- **P-SON package contribute smaller PCB mounting area**

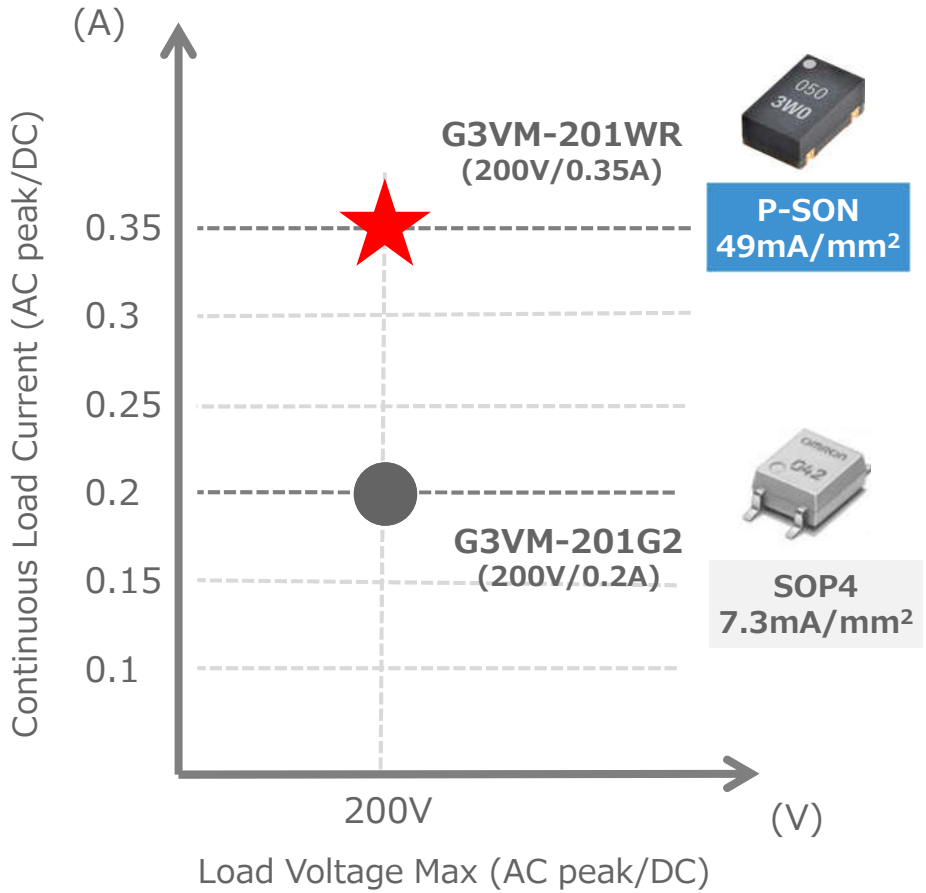

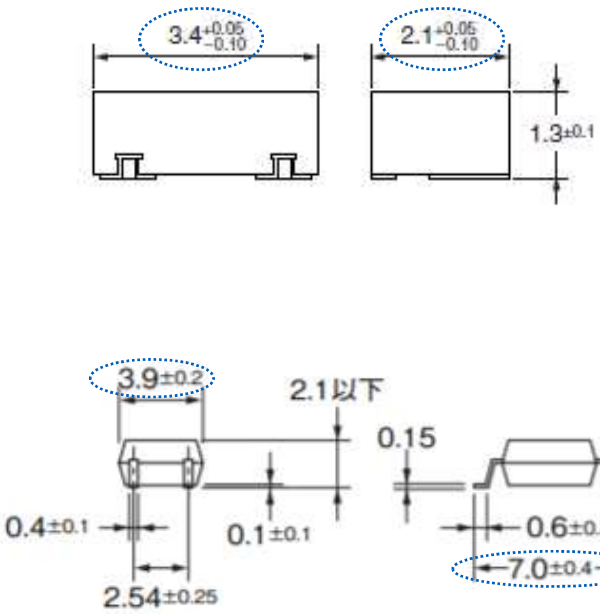

Target application

- **G3VM-201WR is suitable for Test & Measurement applications**
- **Can be alternative solution for SOP4 type and Read relays**

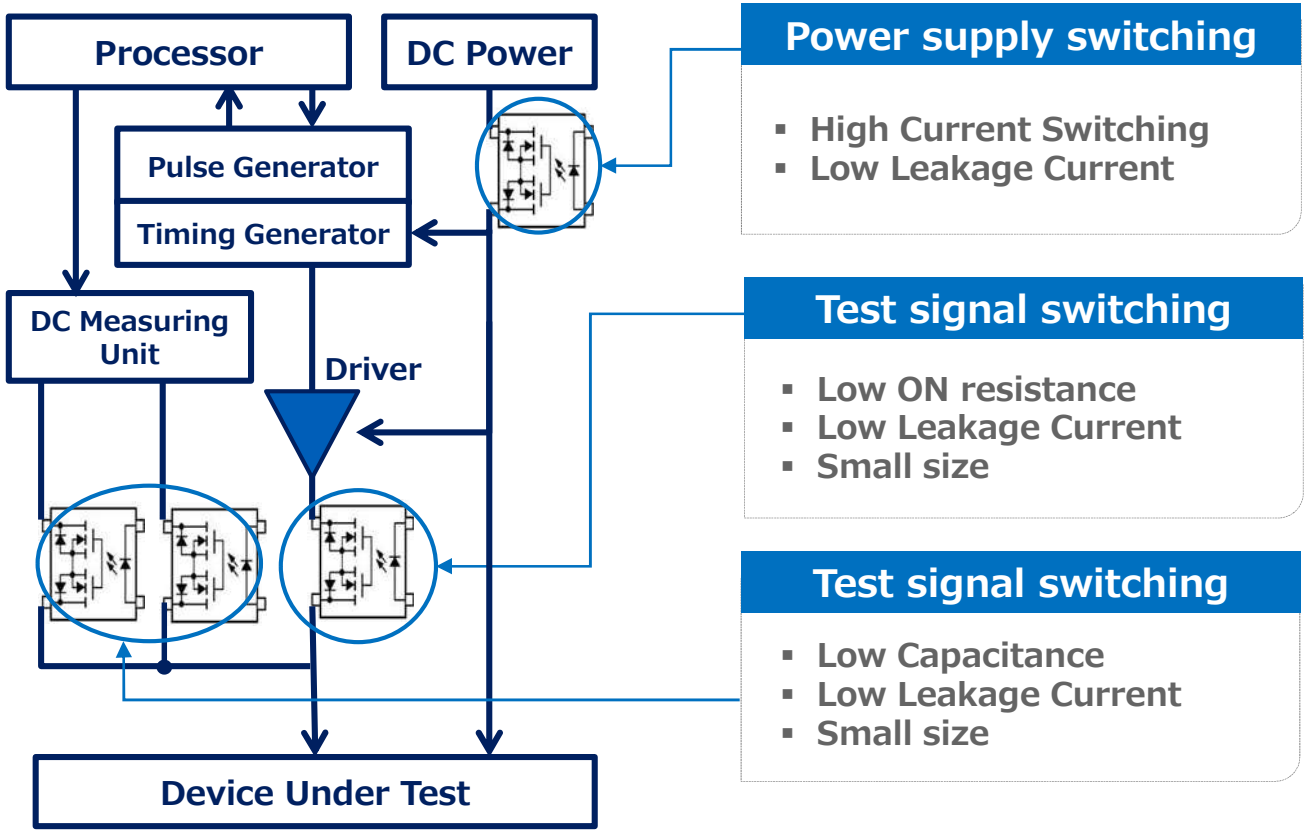

Power supply switching

- High Current Switching
- Low Leakage Current

Test signal switching

- Low ON resistance
- Low Leakage Current
- Small size

Test signal switching

- Low Capacitance
- Low Leakage Current
- Small size



Proposal for smaller size

We can offer VSON, SVSON type in case smaller size is required

Product portfolio of Omron MOSFET Relay

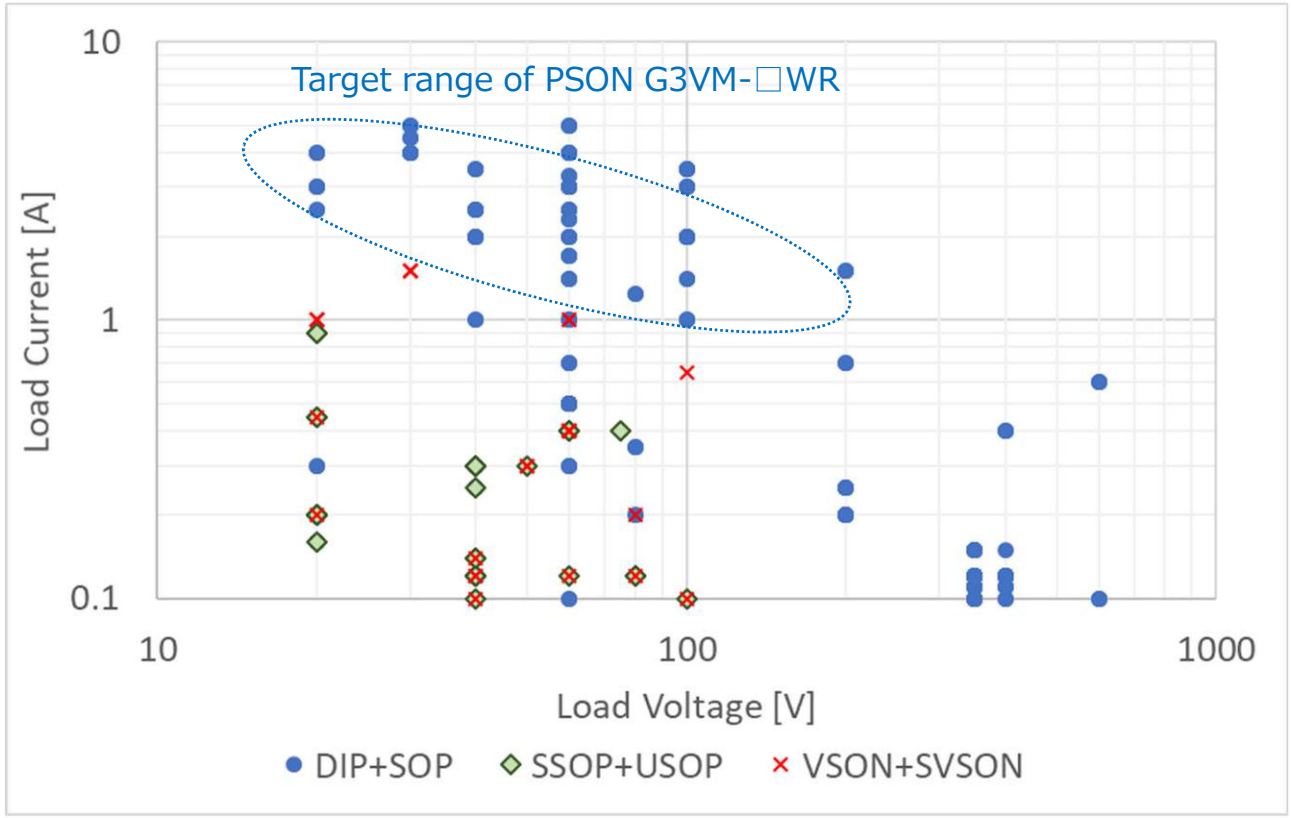



Smaller size products
for ATE application

VSON & V-SON product lineup

We have various type of VSON & V-SON MOSFET Relays

Package	Product Name	Load Voltage	Load Current	Output Resistance (typ.)	Output Capacitance (typ.)	tON (typ.)	tON (max)	tOFF (typ.)	tOFF (max)
		[V]	[A]	[Ohm]	[pF]	[ms]		[ms]	
VSON 	G3VM-21UR10	20	0.20	3.00	0.80	0.05	0.20	0.02	0.20
	G3VM-21UR1		0.45	0.80	5.00	0.17	0.40	0.02	0.40
	G3VM-21UR11		1.00	0.18	40.00	-	2.00	-	1.00
	G3VM-41UR12	40	0.10	15.00	0.30	0.05	0.20	0.03	0.20
	G3VM-41UR10		0.12	12.00	0.45	-	0.20	-	0.30
	G3VM-41UR11		0.14	7.00	0.70	0.06	0.20	0.03	0.20
	G3VM-51UR	50	0.30	1.00	12.00	-	0.50	-	0.40
	G3VM-61UR1	60	0.12	10.00	0.70	0.05	0.20	0.02	0.20
	G3VM-61UR		0.40	1.00	20.00	-	0.50	-	0.50
	G3VM-81UR	80	0.12	7.00	5.00	-	0.50	-	0.20
	G3VM-81UR1		0.20	6.00	6.50	-	0.40	-	0.40
	G3VM-101UR	100	0.10	8.00	6.00	-	0.30	-	0.30
S-VSON 	G3VM-31QR	30	1.50	0.10	120.00	0.80	2.00	0.05	1.00
	G3VM-41QR10*	40	0.12	11.00	0.45	0.08	0.20	0.04	0.30
	G3VM-61QR	60	0.40	1.10	12.00	-	0.50	-	0.30
	G3VM-61QR2		1.00	0.20	80.00	0.75	2.00	0.04	0.30
	G3VM-101QR1	100	0.65	0.40	50.00	0.60	2.00	0.04	0.30

*S-VSON(L) Pulse current is 3times of Load Current (Almost of all) 100ms. Duty=1/10



Thank you for your attention