A9076109

DATEC-CONTROL XS, Vers. I

Hand-Held Case for variable use with specially manageable operation and display area, for display and graphic modules. Recesed operation area for membrane keyboards. Battery compartment lid alternatively snapped-on and/ or screwed down(battery compartment as accessory).

Version
With closed operating area, recess: 1.6 mm deep

Supply
Top and base part, battery compartment lid, assembly kit



TECHNICAL DATA

Material	ABS (UL 94 HB)
Protection class	IP 65 opt. Necessary accessories: sealing kit
Colour	black RAL 9005
Standards	RoHS compliant, REACH compliant

The degree(s) of protection listed refer to the empty standard enclosures (without any modifications) and are in compliance with the EN 60529 standard.

Length	200 mm
Width	94 mm
Height	39.5 mm
PCB length, base	190 mm
PCB width, base	46 mm
PCB length, top	150 mm
PCB width, top	47 mm
Keypad length	116 mm
Keypad width	50 mm

Please take the dimensions from current parts. These are subject to material- and manufacturing-specific tolerances.

A9076109

DATEC-CONTROL XS, Vers. I

PURCHASING DATA

Weight/1 part	125 g
Customs tariff number (OKW product)	39269097
Country of manufacture	Germany

CUSTOMISING OPTIONS

What else do you need to create your own personal product? We can supply our enclosures and tuning knobs fully modified to suit your electronic components and design requirements. Please advise for anything else we can do for you.

Customising options for A9076109


Machining



Printing



Laser marking



Decor foils


Special material


EMC shielding


Installation / Assembly of accessories

A9076109

DATEC-CONTROL XS, Vers. I

ACCESSORY "BATTERY"

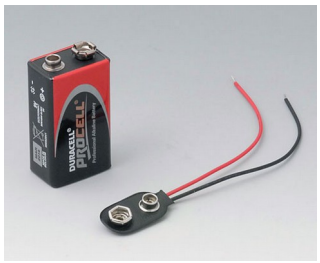

A9160003
Plug-in contact, 1 x 9 V (PP3)

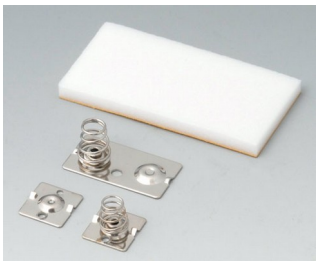

A9176007
Set of battery clips, 2 x AA
Steel
nickel-plated

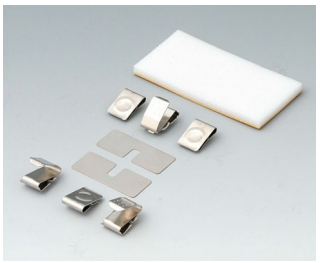

A9176008
Set of battery clips, 3 x AA
Steel
nickel-plated

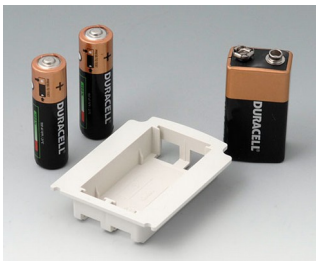

A9176128
Battery compartment XS, 2 x AA or 1 x 9V
ABS (UL 94 HB)

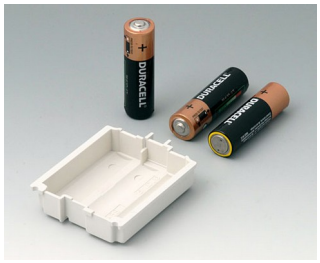

A9176158
Battery compartment XS, 3 x AA
ABS (UL 94 HB)
off-white RAL 9002



A9250250
Battery spacer
PE foam
50x25x4mm

ACCESSORY "STATION"



A9176139
Station XS
ABS (UL 94 HB)
black RAL 9005

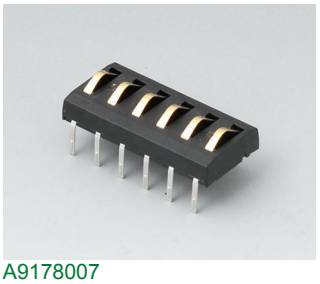

A9178007
Contacts, male
gold-plated



A9199005
Strain relief
PA 6
volcano

ACCESSORY "PROTECTION"

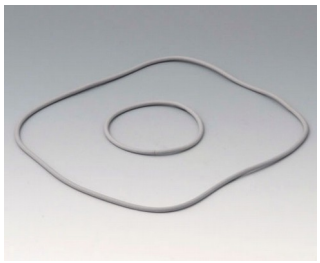

A9176006
Sealing kit XS

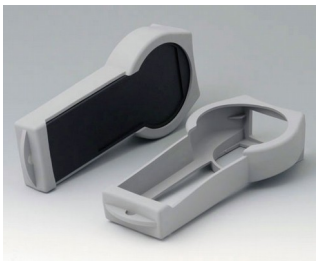

A9176108
Protector XS
SBS (TPE)
volcano

A9076109

DATEC-CONTROL XS, Vers. I

ACCESSORY "WALL/HOLDER"



A9226339
Wall suspension element
ABS (UL 94 HB)
black RAL 9005

ACCESSORY "CARRYING"



A9100002
Ring eyelet
PA 6
volcano

ACCESSORY

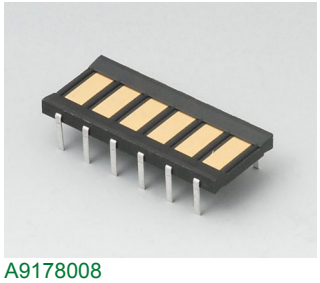

A9178008
Contacts, female
gold-plated

Subject to technical modification without notice. © by OKW Gehäusesysteme, Buchen/Germany.

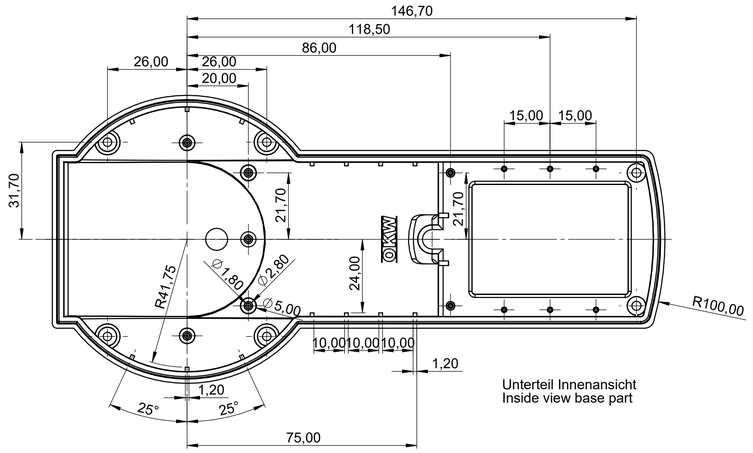

Unterteil Innenansicht
Inside view base part

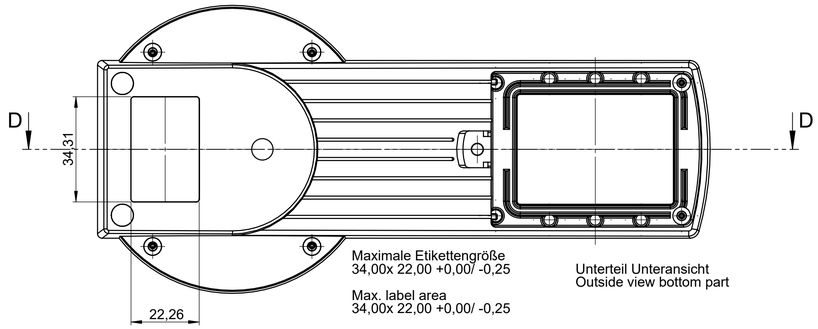

Maximale Etikettengröße
34,00x 22,00 +0,00/ -0,25

Max. label area
34,00x 22,00 +0,00/ -0,25

Unterteil Unteransicht
Outside view bottom part

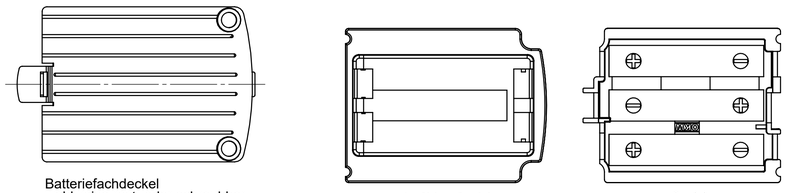

Batteriefachdeckel
wahlweise rast- oder schraubbar

Lid of battery compartment
alternatively snapped- on or screwed down

1x 9V or 2x AA

3x AA

Schnitt B-B

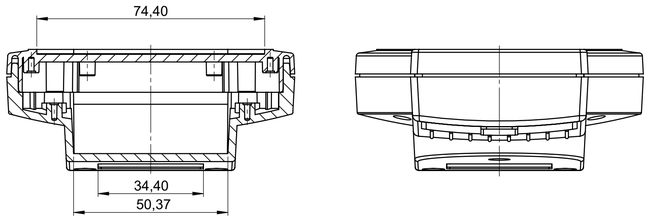

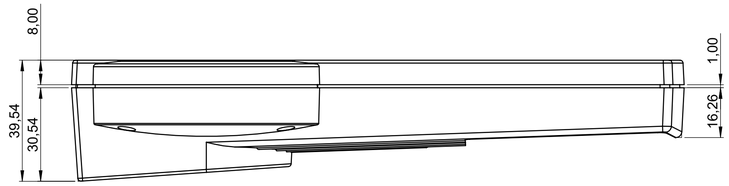

Schnitt C-C

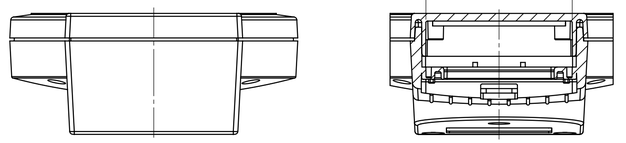

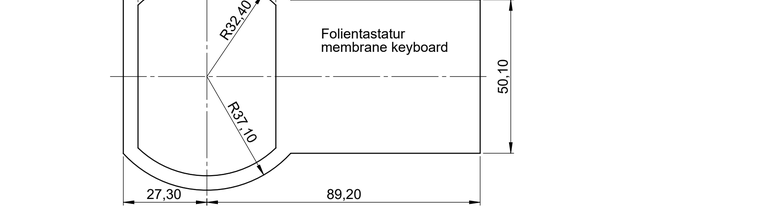

Innenasicht Pberteil
Inside view top part

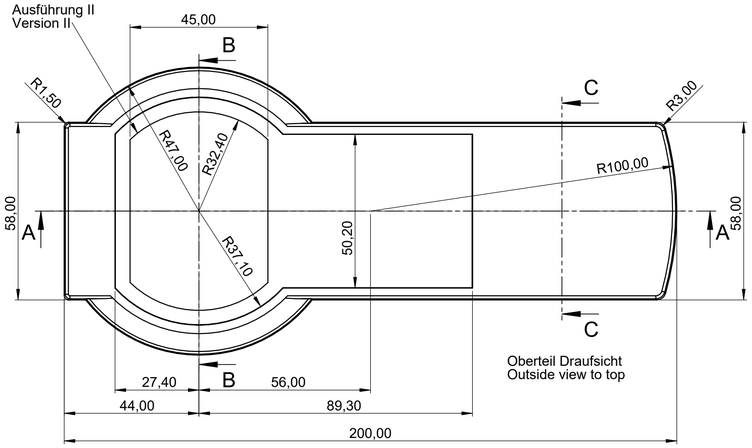

Oberteil Draufsicht
Outside view to top

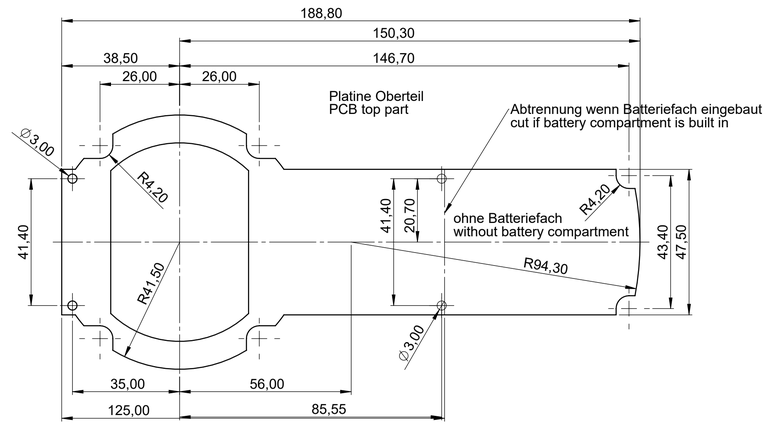

Schnitt A-A

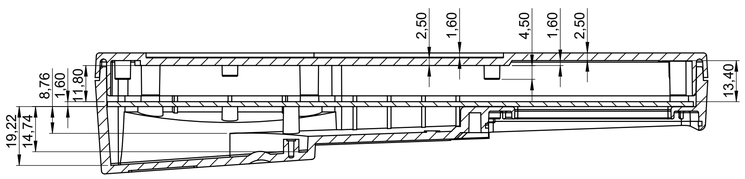

Schnitt D-D

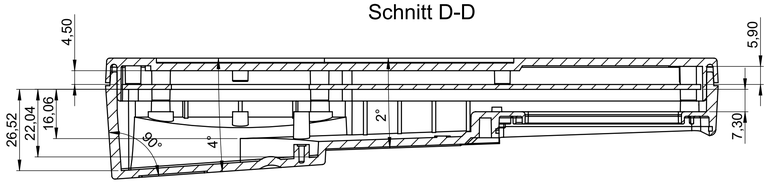

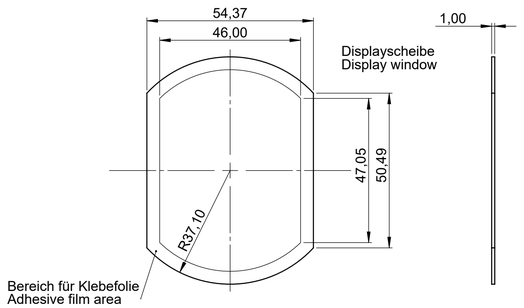

Bereich für Klebefolie
Adhesive film area

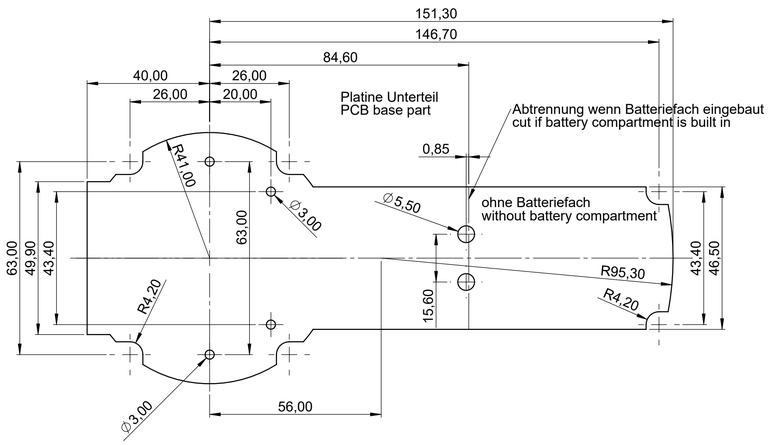

Bitte die Maße an aktuellen Teilen abnehmen.
Diese unterliegen material- und produktionsspezifischen Fertigungstoleranzen.

Please take the dimensions from current parts.
These are subject to material- and manufacturing-specific tolerances.

Informationskopie
wird nicht aktualisiert
Copy for Information
will not be updated

Erst. am: 07.06.2021	Toleranzen:	Status: ENTWICKLUNG	
Erst. von: J. Farrenkopf			
Freig. am:	Volumen:	Zeichnungsart: KUNDE	DIN 6 Teil 2
Freig. von:			
Revision: 01			

This document contains proprietary information of OKW Gehäusesysteme GmbH and is tendered subject to the conditions that the information be retained in confidence not be reproduced or copied and not be used or incorporated in any product.

Technische Änderungen vorbehalten. Irrtümer oder Druckfehler begründen keinen Anspruch auf Schadenersatz. Wichtige Einbaumaße bitte direkt mit dem aktuellen Produkt abstimmen.

Subject to technical modification without prior notice. Typographical and other errors do not justify any claim for damages. All dimensions should be verified using an actual moulded part.

Sous reserve de modifications techniques. Toute erreur ou faute d'impression ne justifie aucune demande d'indemnisation. Nous prions les clients de verifier les dimensions des composants avec les boitiers avant le montage.

OKW GEHÄUSE SYSTEME

DATEC-CONTROL XS
Case complete, Vers. I/ II

A9076*

M 1:1

Für dieses Dokument behalten wir uns alle Urheberrechte vor. Es darf auch auszugsweise weder vervielfältigt noch Dritten in irgendeiner Form zugänglich gemacht werden.

Dateiname: 00007881