JUMO GmbH & Co. KG
Delivery address: Mackenrodtstraße 14
36039 Fulda, Germany
Postal address: 36035 Fulda, Germany
Phone: +49 661 6003-0
Fax: +49 661 6003-607
Email: mail@jumo.net
Internet: www.jumo.net

JUMO Instrument Co. Ltd.
JUMO House
Temple Bank, Riverway
Harlow, Essex CM 20 2DY, UK
Phone: +44 1279 63 55 33
Fax: +44 1279 62 50 29
Email: sales@jumo.co.uk
Internet: www.jumo.co.uk

JUMO Process Control, Inc.
6733 Myers Road
East Syracuse, NY 13057, USA
Phone: +1 315 437 5866
Fax: +1 315 437 5860
Email: info.us@jumo.net
Internet: www.jumousa.com

JUMO ecoLine / JUMO BlackLine pH and redox combination electrodes

in glass or plastic shaft versions

201005 series - pH electrodes
201010 series - redox electrodes



(1) (2) (3)

(1) Glass shaft version
(2) Version with plastic shaft and push-on protection basket
(3) JUMO BlackLine version with plastic shaft and fixed protection basket

Brief description

The electrodes of the JUMO ecoLine and JUMO BlackLine series are high-quality measurement sensors with a good price/performance ratio.
Active pH component: The JUMO ecoLine and JUMO BlackLine electrodes are equipped with low-resistance JUMO UW glass. This guarantees fast and safe measurement results.
Active redox component: A sturdy platinum tip provides safe measurements and makes the sensor easy to clean.
Reference system: Acrylamide-free JUMO gel is used in the glass and PEI plastic shaft versions. This highly viscous KCl solution is ideal for measurement in general, aqueous media. The electrolyte can be equipped with an optional "salt reserve" to increase the service life when measurements take place in media with fewer ions or at high flow rates. A polymerized solid KCl electrolyte is used in the JUMO BlackLine version. The JUMO cartridge-style conduction system has proved its worth over the years and is the reference system used here. This keeps the electrolyte free of silver ions throughout the life of the sensor, making it less susceptible to electrode poisons.
In the "glass shaft" (1) version, JUMO ecoLine electrodes have a ceramic diaphragm. A glass fiber diaphragm is provided for the plastic shaft version made from transparent PEI (2). A push-on protection basket guards the sensor when it is used with hand-held meters. The JUMO BlackLine (3) has a high-quality ceramic diaphragm. The shaft is made from black PPO and has an integrated protection basket.
The option is available to have the electrodes delivered in a storage container (holder). This is recommended if sensors are only used sporadically, to refresh them after lengthy periods of intensive use, or if they are stored for extended periods of time.
OEM versions of all sensors can be supplied to order.
Special versions are available on request.

Areas of application

- Drinking water monitoring and treatment
- Swimming pools
- Aquariums (also marine aquariums)
- Greenhouse systems
- Lightly polluted service water, process water and wastewater
- Rainwater, pond water and surface water
- Hand-held meters

Not recommended for:

- Electroplating water treatment
- Industrial process water and wastewater
- Ultra-pure water
- Therapy pools
- Biotechnology, sterilization processes

For other applications, refer to the data sheets for JUMO tecLine or JUMO labLine pH and redox electrodes!

JUMO GmbH & Co. KG
Delivery address: Mackenrodtstraße 14
36039 Fulda, Germany
Postal address: 36035 Fulda, Germany
Phone: +49 661 6003-0
Fax: +49 661 6003-607
Email: mail@jumo.net
Internet: www.jumo.net

JUMO Instrument Co. Ltd.
JUMO House
Temple Bank, Riverway
Harlow, Essex CM 20 2DY, UK
Phone: +44 1279 63 55 33
Fax: +44 1279 62 50 29
Email: sales@jumo.co.uk
Internet: www.jumo.co.uk

JUMO Process Control, Inc.
6733 Myers Road
East Syracuse, NY 13057, USA
Phone: +1 315 437 5866
Fax: +1 315 437 5860
Email: info.us@jumo.net
Internet: www.jumousa.com

Technical data

	Glass shaft version (Figure 1, page 1/8)	**Version with plastic shaft and push-on protection basket (Figure 2, page 1/8)**	**JUMO BlackLine Version with plastic shaft and fixed protection basket (Figure 3, page 1/8)**
Shaft material	glass	PEI[a]	PPO[b]
Diaphragm	ceramic	glass filament	ceramic
Conduction system	plastic cartridge		
Temperature range	0 to 60 °C		
Pressure range[c]	0 to 6 bar		
Fitting length	120 mm		
Electrode head	plug cap plug cap with fixed cable Pg13.5 screw cap Pg13.5 screw cap with fixed cable The connecting cable of versions with a fixed cable has anti-kink protection. Versions with a fixed cable have IP68 enclosure protection		
Active pH component	UW glass (pH 0 to 12, briefly pH 14)		
Active redox component	platinum tip (±2000 mV)		
Electrolyte	gel (highly viscous KCl solution)		solid electrolyte
Recommended minimum conductivity of the medium	without salt reserve:100 µS/cm	without salt reserve:150 µS/cm	without salt reserve:100 µS/cm
	with salt reserve:50 µS/cm	with salt reserve:100 µS/cm	with salt reserve:50 µS/cm

[a] PEI = polyetherimide.
[b] PPO = polyphenylene ether.
[c] The pressure figures relate to stable conditions at the installation location: severe pressure surges and fluctuations should be avoided.

Extra codes

KCl reservoir (holder), extra code 052		**Salt reserve, extra code 837**	
	The foot of the KCl reservoir can also be used as a mounting wrench for pH and redox electrodes with a Pg13.5 thread. The indentations in the (detachable) foot of the reservoir fit the hexagon flats of the electrode head. When storing the electrodes, the reservoir must be filled with KCl (**not with buffer solution or similar**).		The option is available to equip the electrode with a salt reserve, in the form of four salt rings (see illustration). This is recommended when using the electrode in media with fewer ions or at high flow rates. The salt reserve helps to increase the service life of the electrode. The rings are not a manufacturing defect (crystallization).

Further pH and redox electrodes can be found in the following data sheets:

- Data sheet 201020 – JUMO tecLine pH/Rd combination electrodes
- Data sheet 201030 – JUMO laboratory pH combination electrodes
- Data sheet 201050 – JUMO ISFET pH combination electrode
- Data sheet 201081 – JUMO glass pH electrodes
- Data sheet 201082 – JUMO single/twin redox electrodes
- Data sheet 201083 – JUMO reference electrode
- Data sheet 201085 – JUMO compensation thermometers

JUMO GmbH & Co. KG
Delivery address: Mackenrodtstraße 14
36039 Fulda, Germany
Postal address: 36035 Fulda, Germany
Phone: +49 661 6003-0
Fax: +49 661 6003-607
Email: mail@jumo.net
Internet: www.jumo.net

JUMO Instrument Co. Ltd.
JUMO House
Temple Bank, Riverway
Harlow, Essex CM 20 2DY, UK
Phone: +44 1279 63 55 33
Fax: +44 1279 62 50 29
Email: sales@jumo.co.uk
Internet: www.jumo.co.uk

JUMO Process Control, Inc.
6733 Myers Road
East Syracuse, NY 13057, USA
Phone: +1 315 437 5866
Fax: +1 315 437 5860
Email: info.us@jumo.net
Internet: www.jumousa.com

Dimensions

Glass shaft version

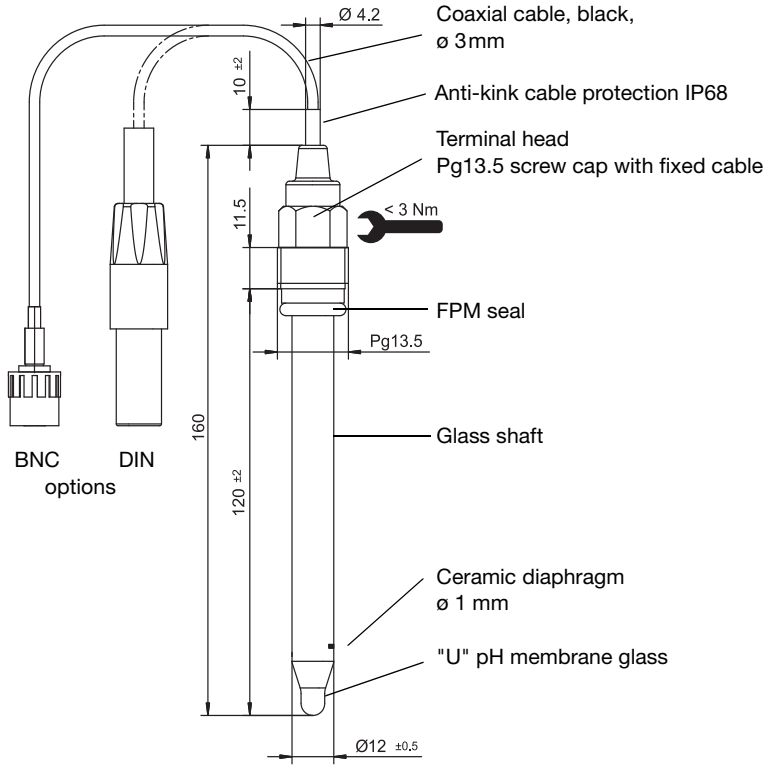

Type 2010xx/51-18-60-xxxx-xx-120/000

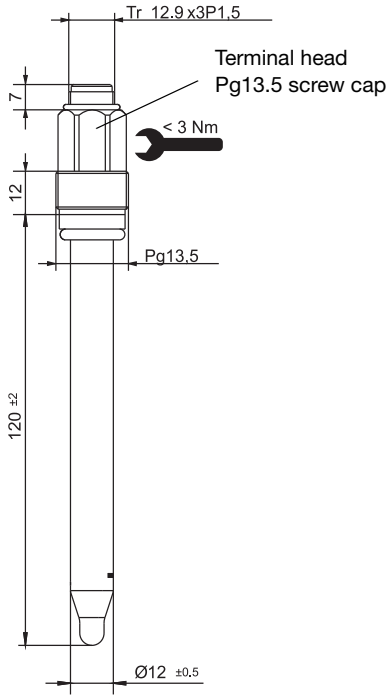

Type 2010xx/51-18-22-0000-00-120/000

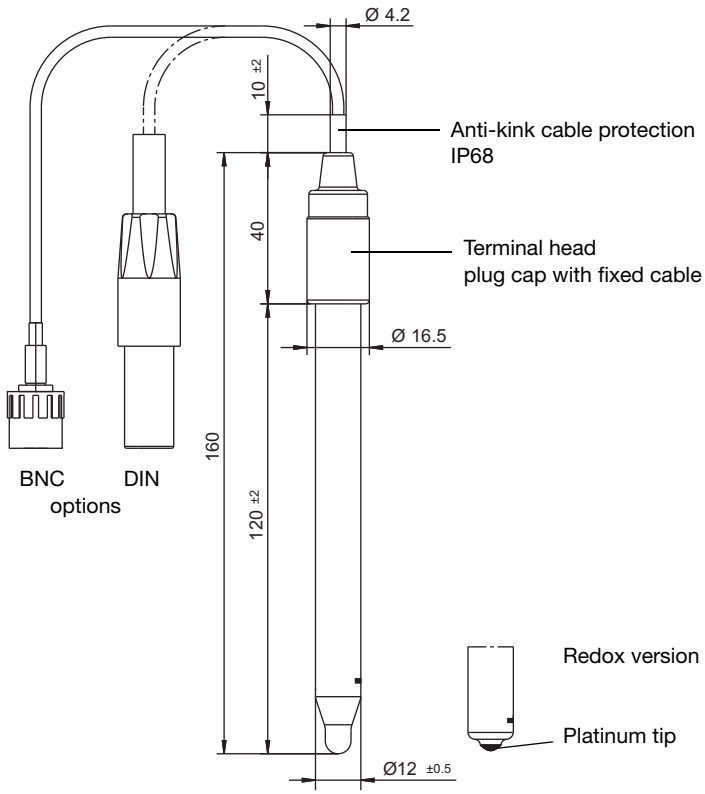

Type 2010xx/51-18-40-xxxx-xx-120/000

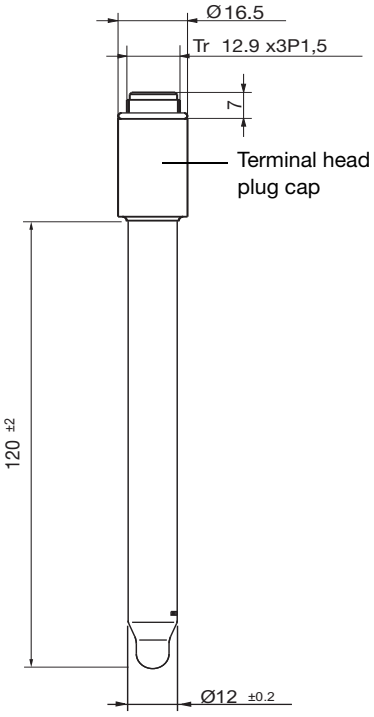

Type 2010xx/21-18-51-0000-00-120/000

JUMO GmbH & Co. KG
Delivery address: Mackenrodtstraße 14
36039 Fulda, Germany
Postal address: 36035 Fulda, Germany
Phone: +49 661 6003-0
Fax: +49 661 6003-607
Email: mail@jumo.net
Internet: www.jumo.net

JUMO Instrument Co. Ltd.
JUMO House
Temple Bank, Riverway
Harlow, Essex CM 20 2DY, UK
Phone: +44 1279 63 55 33
Fax: +44 1279 62 50 29
Email: sales@jumo.co.uk
Internet: www.jumo.co.uk

JUMO Process Control, Inc.
6733 Myers Road
East Syracuse, NY 13057, USA
Phone: +1 315 437 5866
Fax: +1 315 437 5860
Email: info.us@jumo.net
Internet: www.jumousa.com

Order details:

JUMO ecoLine / JUMO BlackLine - pH / redox combination electrodes with glass shaft

			(1)	**Basic type**
		201005		pH electrodes
		201010		redox electrodes
			(2)	**Basic type extension**
x	x	51		Glass version, ceramic diaphragm, K cartridge
			(3)	**Active component**
x		18		UW glass (for pH version)
	x	22		platinum tip (for redox version)
			(4)	**Electrical connection**
o	o	21		plug cap
x	x	22		Pg13.5 screw cap
o	o	40		plug cap with fixed cable
o	o	60		Pg13.5 screw cap with fixed cable
			(5)	**Cable length[a]**
x	x	0000		no cable
o	o	xxxx		length in mm (whole meters only, max. 10 m) standard length 1,000 mm (1 m)
			(6)	**Instrument connector**
x	x	00		none
o	o	76		BNC connector
o	o	78		DIN connector
			(7)	**Fitting length**
x	x	120		120 mm
			(8)	**Extra codes**
x	x	000		none
o	o	052		KCl reservoir (holder)
o	o	837		salt reserve

[a] Possible only for 40 or 60 electrical connection.

x = as standard
o = option
- = not available

	(1)		(2)		(3)		(4)		(5)		(6)		(7)		(8)	
Order code		/		-		-		-		-		-		/		, ...[a]
Order example	201005	/	51	-	18	-	21	-	2000	-	76	-	120	/	000	

[a] List extra codes in sequence, separated by commas.

Note:
The type code is not a modular system.
If possible, choose items listed under **"stock versions"** or **"production versions"** for your orders.
We will have to technically inspect and approve a free combination of individual key features.

JUMO GmbH & Co. KG
Delivery address: Mackenrodtstraße 14
36039 Fulda, Germany
Postal address: 36035 Fulda, Germany
Phone: +49 661 6003-0
Fax: +49 661 6003-607
Email: mail@jumo.net
Internet: www.jumo.net

JUMO Instrument Co. Ltd.
JUMO House
Temple Bank, Riverway
Harlow, Essex CM 20 2DY, UK
Phone: +44 1279 63 55 33
Fax: +44 1279 62 50 29
Email: sales@jumo.co.uk
Internet: www.jumo.co.uk

JUMO Process Control, Inc.
6733 Myers Road
East Syracuse, NY 13057, USA
Phone: +1 315 437 5866
Fax: +1 315 437 5860
Email: info.us@jumo.net
Internet: www.jumousa.com

Stock versions

(delivery 3 working days after receipt of order)

Type	Description	Sales No.
201005/51-18-22-0000-00-120/000	pH, glass shaft, Pg13.5 screw cap	00405532
201010/51-22-22-0000-00-120/000	Redox, glass version, Pg13.5 screw cap	00413906

Production version

(delivery 10 working days after receipt of order)

Type	Description	Sales No.
201005/51-18-60-1000-76-120/000	pH, glass shaft, 1 m fixed cable with Pg13.5, BNC connector	00459671

JUMO GmbH & Co. KG
Delivery address: Mackenrodtstraße 14
36039 Fulda, Germany
Postal address: 36035 Fulda, Germany
Phone: +49 661 6003-0
Fax: +49 661 6003-607
Email: mail@jumo.net
Internet: www.jumo.net

JUMO Instrument Co. Ltd.
JUMO House
Temple Bank, Riverway
Harlow, Essex CM 20 2DY, UK
Phone: +44 1279 63 55 33
Fax: +44 1279 62 50 29
Email: sales@jumo.co.uk
Internet: www.jumo.co.uk

JUMO Process Control, Inc.
6733 Myers Road
East Syracuse, NY 13057, USA
Phone: +1 315 437 5866
Fax: +1 315 437 5860
Email: info.us@jumo.net
Internet: www.jumousa.com

Dimensions

Version with (PEI) plastic shaft and push-on protection basket

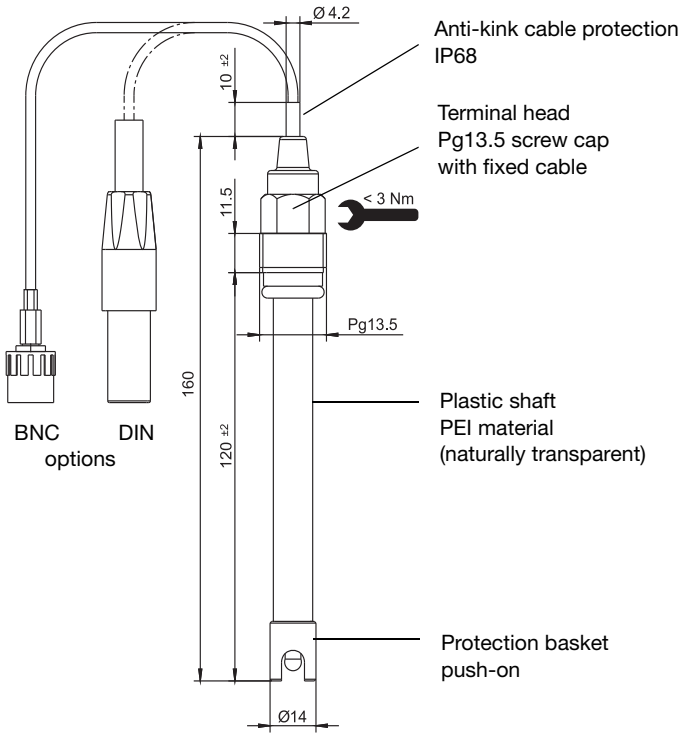

Type 201005/53-18-60-xxxx-xx-120/000 (pH)
Type 201010/53-22-60-xxxx-xx-120/000 (redox)

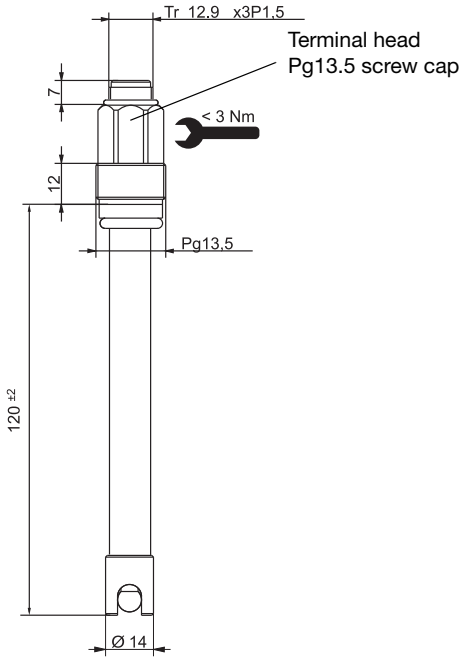

Type 201005/53-18-22-0000-00-120/000 (pH)
Type 201010/53-22-22-0000-00-120/000 (redox)

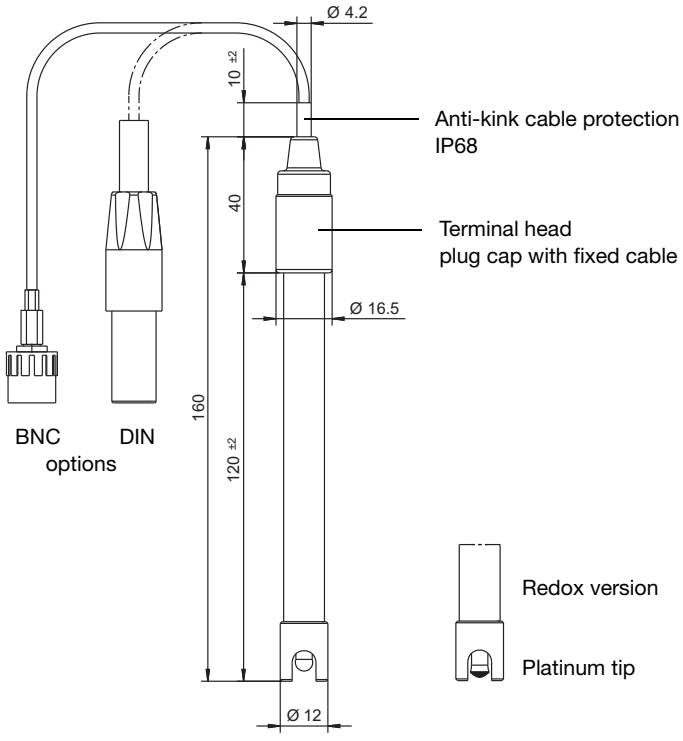

Type 201005/53-18-40-xxxx-xx-120/000 (pH)
Type 201010/53-22-40-xxxx-xx-120/000 (redox)

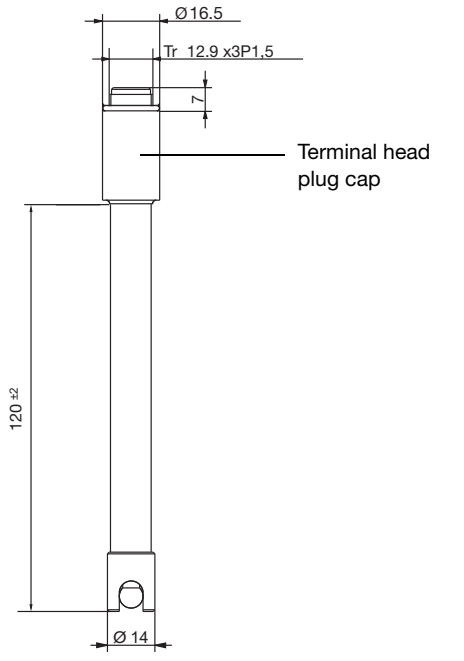

Type 201005/21-18-0000-00-120/000 (pH)
Type 201010/53-22-21-0000-00-120/000 (redox)

JUMO GmbH & Co. KG
Delivery address: Mackenrodtstraße 14
36039 Fulda, Germany
Postal address: 36035 Fulda, Germany
Phone: +49 661 6003-0
Fax: +49 661 6003-607
Email: mail@jumo.net
Internet: www.jumo.net

JUMO Instrument Co. Ltd.
JUMO House
Temple Bank, Riverway
Harlow, Essex CM 20 2DY, UK
Phone: +44 1279 63 55 33
Fax: +44 1279 62 50 29
Email: sales@jumo.co.uk
Internet: www.jumo.co.uk

JUMO Process Control, Inc.
6733 Myers Road
East Syracuse, NY 13057, USA
Phone: +1 315 437 5866
Fax: +1 315 437 5860
Email: info.us@jumo.net
Internet: www.jumousa.com

Order details:

JUMO ecoLine / JUMO BlackLine - pH / redox combination electrodes with plastic shaft and push-on protection basket

			(1)	**Basic type**
		201005		pH electrodes
		201010		redox electrodes
			(2)	**Basic type extension**
x	x	53		PEI plastic shaft[a], glass filament diaphragm, K cartridge
			(3)	**Active component**
x		18		UW glass (for pH version)
	x	22		platinum tip (for redox version)
			(4)	**Electrical connection**
o	o	21		plug cap
x	x	22		Pg13.5 screw cap
o	o	40		plug cap with fixed cable
o	o	60		Pg13.5 screw cap with fixed cable
			(5)	**Cable length[b]**
x	x	0000		no cable
o	o	xxxx		length in mm (whole meters only, max. 10 m) standard length 1,000 mm (1 m)
			(6)	**Instrument connector**
x	x	00		none
o	o	76		BNC connector
o	o	78		DIN connector
			(7)	**Fitting length**
x	x	120		120 mm
			(8)	**Extra codes**
x	x	000		none
o	o	052		KCl reservoir (holder)
o	o	837		salt reserve

[a] PEI = polyetherimide.
[b] Possible only for 40 or 60 electrical connection.

x = as standard
o = option
- = not available

	(1)		(2)		(3)		(4)		(5)		(6)		(7)		(8)	
Order code		/		-		-		-		-		-		/		, ...[a]
Order example	201005	/	53	-	18	-	21	-	1000	-	76	-	120	/	000	

[a] List extra codes in sequence, separated by commas

Note:
The type code is not a modular system.
If possible, choose items listed under **"stock versions"** or **"production versions"** for your orders.
We will have to technically inspect and approve a free combination of individual key features.

JUMO GmbH & Co. KG
Delivery address: Mackenrodtstraße 14
36039 Fulda, Germany
Postal address: 36035 Fulda, Germany
Phone: +49 661 6003-0
Fax: +49 661 6003-607
Email: mail@jumo.net
Internet: www.jumo.net

JUMO Instrument Co. Ltd.
JUMO House
Temple Bank, Riverway
Harlow, Essex CM 20 2DY, UK
Phone: +44 1279 63 55 33
Fax: +44 1279 62 50 29
Email: sales@jumo.co.uk
Internet: www.jumo.co.uk

JUMO Process Control, Inc.
6733 Myers Road
East Syracuse, NY 13057, USA
Phone: +1 315 437 5866
Fax: +1 315 437 5860
Email: info.us@jumo.net
Internet: www.jumousa.com

Stock versions

(delivery 3 working days after receipt of order)

Type	Description	Sales No.
201005/53-18-22-0000-00-120/000	pH, PEI shaft, Pg13.5 screw cap	00357022
201010/53-22-22-0000-00-120/000	Redox, PEI shaft, Pg13.5 screw cap	00357020

Production versions

(delivery 10 working days after receipt of order)

Type	Description	Sales No.
201005/53-18-40-1000-78-120/000	pH, PEI shaft, 1 m fixed cable, no thread, DIN connector	00300149
201005/53-18-21-0000-00-120/000	pH, PEI shaft, plug cap	00300192
201010/53-22-40-1000-76-120/000	Redox, PEI shaft, 1 m fixed cable, no thread, BNC connector	00343525

JUMO GmbH & Co. KG
Delivery address: Mackenrodtstraße 14
36039 Fulda, Germany
Postal address: 36035 Fulda, Germany
Phone: +49 661 6003-0
Fax: +49 661 6003-607
Email: mail@jumo.net
Internet: www.jumo.net

JUMO Instrument Co. Ltd.
JUMO House
Temple Bank, Riverway
Harlow, Essex CM 20 2DY, UK
Phone: +44 1279 63 55 33
Fax: +44 1279 62 50 29
Email: sales@jumo.co.uk
Internet: www.jumo.co.uk

JUMO Process Control, Inc.
6733 Myers Road
East Syracuse, NY 13057, USA
Phone: +1 315 437 5866
Fax: +1 315 437 5860
Email: info.us@jumo.net
Internet: www.jumousa.com

Dimensions

JUMO BlackLine: version with (PPO) plastic shaft and fixed protection basket

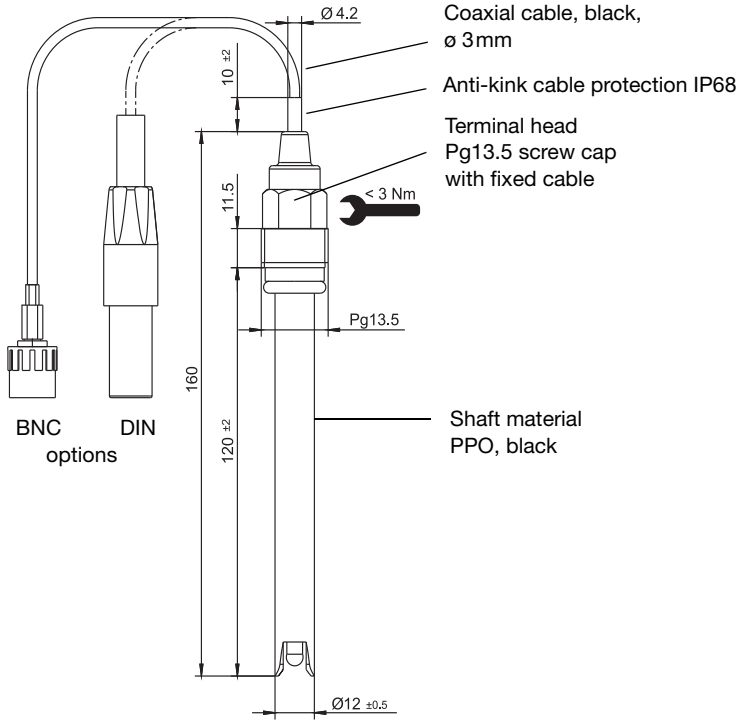

Type 201005/65-18-65-xxxx-xx-120/000 (pH)
Type 201010/65-22-65-xxxx-xx-120/000 (redox)

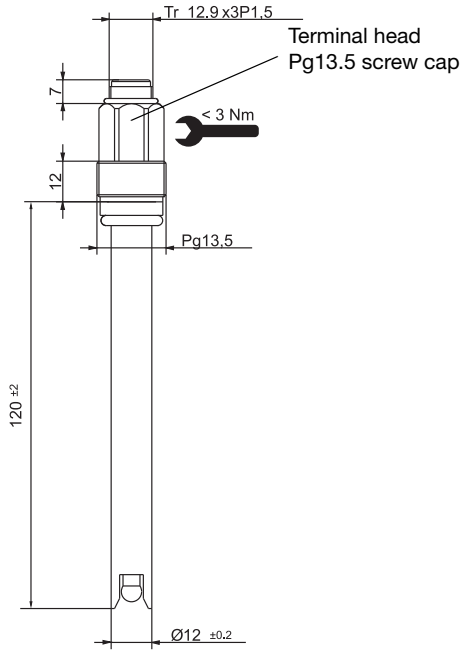

Type 201005/65-18-22-0000-00-120/000 (pH)
Type 201010/65-22-22-0000-00-120/000 (redox)

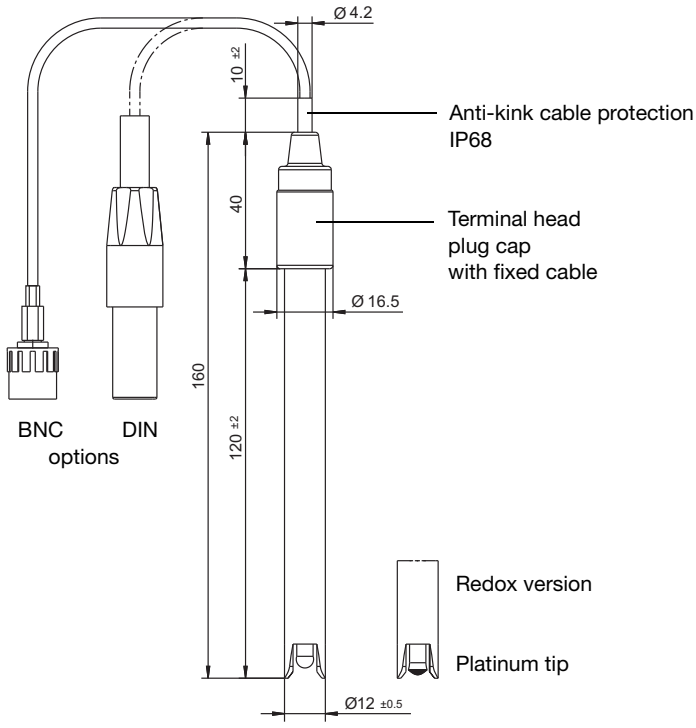

Type 201005/65-18-45-xxxx-xx-120/000 (pH)
Type 201010/65-22-45-xxxx-xx-120/000 (redox)

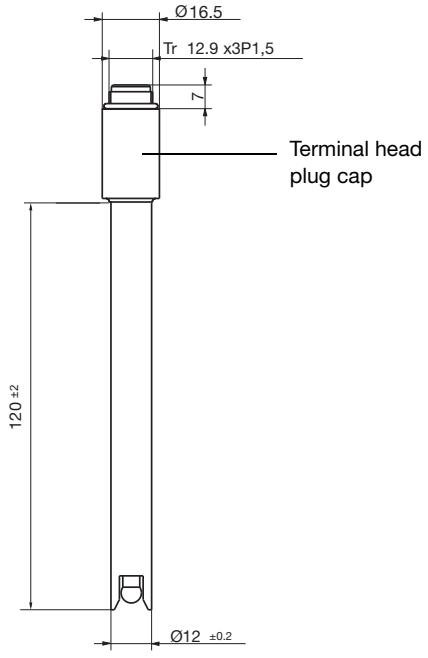

Type 201005/65-18-21-0000-00-120/000 (pH)
Type 201010/65-22-21-0000-00-120/000 (redox)

JUMO GmbH & Co. KG
Delivery address: Mackenrodtstraße 14
36039 Fulda, Germany
Postal address: 36035 Fulda, Germany
Phone: +49 661 6003-0
Fax: +49 661 6003-607
Email: mail@jumo.net
Internet: www.jumo.net

JUMO Instrument Co. Ltd.
JUMO House
Temple Bank, Riverway
Harlow, Essex CM 20 2DY, UK
Phone: +44 1279 63 55 33
Fax: +44 1279 62 50 29
Email: sales@jumo.co.uk
Internet: www.jumo.co.uk

JUMO Process Control, Inc.
6733 Myers Road
East Syracuse, NY 13057, USA
Phone: +1 315 437 5866
Fax: +1 315 437 5860
Email: info.us@jumo.net
Internet: www.jumousa.com

Order details:

JUMO ecoLine / JUMO BlackLine - pH / redox combination electrodes with plastic shaft and push-on protection basket

			(1)	**Basic type**
		201005		pH electrodes
		201010		redox electrodes
			(2)	**Basic type extension**
x	x	65		BlackLine version, PPO plastic shaft[a] black, ceramic diaphragm, solid electrolyte, cartridge-style conduction system
			(3)	**Active component**
x		18		UW glass (for pH version)
	x	22		platinum tip (for redox version)
			(4)	**Electrical connection**
o	o	21		plug cap
x	x	22		Pg13.5 screw cap
o	o	45		plug cap with fixed cable
o	o	65		Pg13.5 screw cap with fixed cable
			(5)	**Cable length**[b]
x	x	0000		no cable
o	o	xxxx		length in mm (whole meters only, max. 10m) standard length 2,000 mm (2 m)
			(6)	**Instrument connector**
x	x	00		none
o	o	76		BNC connector
o	o	78		DIN connector
			(7)	**Fitting length**
x	x	120		120 mm
			(8)	**Extra codes**
o	o	052		KCl reservoir (holder)
x	x	837		salt reserve (standard)

[a] PPO = polyphenylene ether.
[b] Possible only for 45 or 65 electrical connection.

x = as standard
o = option
- = not available

	(1)		(2)		(3)		(4)		(5)		(6)		(7)		(8)	
Order code		/		-		-		-		-		-		/		, ...[a]
Order example	201005	/	65	-	18	-	22	-	2000	-	00	-	120	/	000	

[a] List extra codes in sequence, separated by commas.

Note:
The type code is not a modular system.
If possible, choose items listed under **"stock versions"** or **"production versions"** for your orders.
We will have to technically inspect and approve a free combination of individual key features.

JUMO GmbH & Co. KG
Delivery address: Mackenrodtstraße 14
36039 Fulda, Germany
Postal address: 36035 Fulda, Germany
Phone: +49 661 6003-0
Fax: +49 661 6003-607
Email: mail@jumo.net
Internet: www.jumo.net

JUMO Instrument Co. Ltd.
JUMO House
Temple Bank, Riverway
Harlow, Essex CM 20 2DY, UK
Phone: +44 1279 63 55 33
Fax: +44 1279 62 50 29
Email: sales@jumo.co.uk
Internet: www.jumo.co.uk

JUMO Process Control, Inc.
6733 Myers Road
East Syracuse, NY 13057, USA
Phone: +1 315 437 5866
Fax: +1 315 437 5860
Email: info.us@jumo.net
Internet: www.jumousa.com

Stock versions

(delivery 3 working days after receipt of order)

Type	Description	Sales No.
201005/65-18-22-0000-00-120/837	pH, Pg13.5 screw cap, no cable	00419812
201005/65-18-45-2000-76-120/837	pH, no thread, 2m fixed cable, BNC connector	00417300
201005/65-18-65-2000-76-120/837	pH, with Pg13.5 thread, 2m fixed cable, BNC connector	00424828
201010/65-22-45-2000-76-120/837	Redox, no thread, 2m fixed cable, BNC connector	00417301
201010/65-22-65-2000-76-120/837	Redox, with Pg13.5 thread, 2m fixed cable, BNC connector	00424950