OJ5152

Laser diffuse reflection sensor

OJHLFPKG/FO/AS

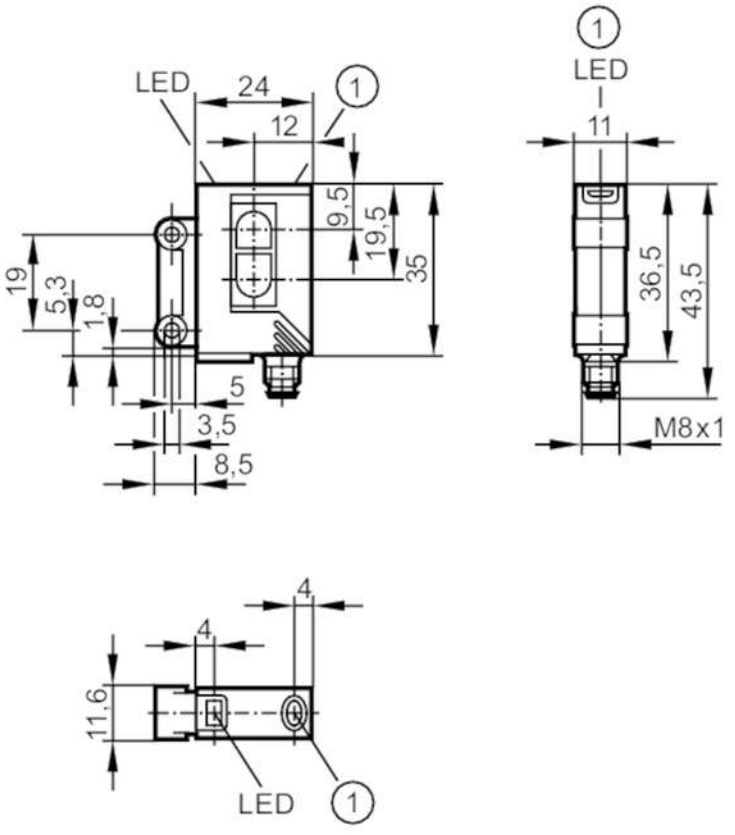

1 pushbutton
receiver in upper lens
transmitter in lower lens

Product characteristics		
Type of light		red light
Laser protection class		1
Housing		rectangular
Application		
Special feature		Background suppression
Function principle		Diffuse reflection sensor
Electrical data		
Operating voltage	[V]	10...30 DC
Current consumption	[mA]	13
Protection class		III
Reverse polarity protection		yes
Type of light		red light
Wave length	[nm]	650
Typ. lifetime	[h]	50000
Outputs		
Electrical design		PNP

OJ5152

Laser diffuse reflection sensor

OJHLFPKG/FO/AS

Output function			light-on/dark-on mode; (programmable)
Max. voltage drop switching output DC	[V]		2.5
Permanent current rating of switching output DC	[mA]		200
Switching frequency DC	[Hz]		1000
Short-circuit protection			yes
Type of short-circuit protection			pulsed
Overload protection			yes
Detection zone			
Range	[mm]		15...200; (white paper 200 x 200 mm 90% remission)
Range adjustable			yes
Diameter of the smallest detectable object	[mm]		2
Max. light spot width	[mm]		2
Max. light spot height	[mm]		1
Background suppression available			yes
Operating conditions			
Ambient temperature	[°C]		-10...60
Protection			IP 67
Tests / approvals			
EMC		EN 60947-5-2	
Laser protection class			1
Notes on laser protection		Caution:	laser light
		laser class:	1
			EN / IEC60825-1:2007
			EN / IEC60825-1:2014
			Complies with 21 CFR 1040 except for deviations pursuant to Laser Notice No. 50, dated June 2007.
MTTF	[years]		501
Mechanical data			
Weight	[g]		28.6
Housing			rectangular
Dimensions	[mm]		35 x 24 x 11
Materials			housing: ABS; LED window: SEPS; pushbutton: SEPS
Lens material			PMMA
Lens alignment			front lens
Displays / operating elements			
Display		switching status	1 x LED, yellow
		operation	1 x LED, green
Electronic lock			yes

OJ5152

Laser diffuse reflection sensor

OJHLFPKG/FO/AS

Accessories

Items supplied	screws: 2
	spring washers: 2
	Nuts: 2

Remarks

Remarks	operating voltage "supply class 2" according to cULus
Pack quantity	1 pcs.

Electrical connection

Connector: 1 x M8; coding: A



Connection

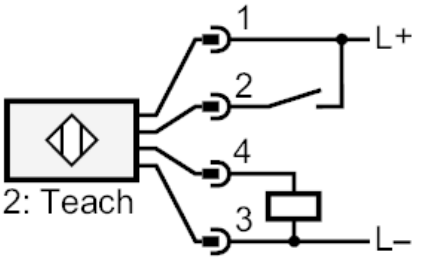

2 Teach

Diagrams and graphs

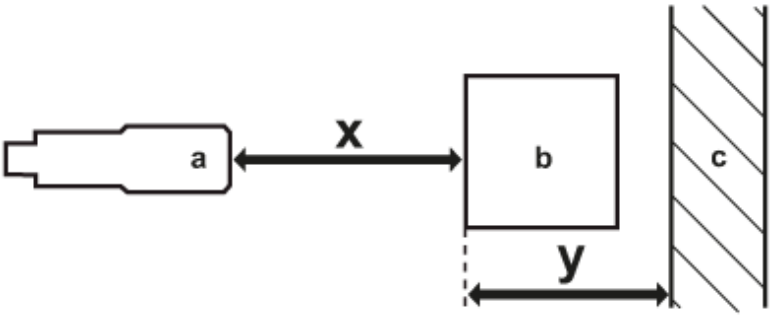

a: sensor

b: object

c: background

x: distance sensor/object [mm]

y: min. distance object/background [mm]

OJ5152

Laser diffuse reflection sensor

OJHLFPKG/FO/AS

accuracy graph

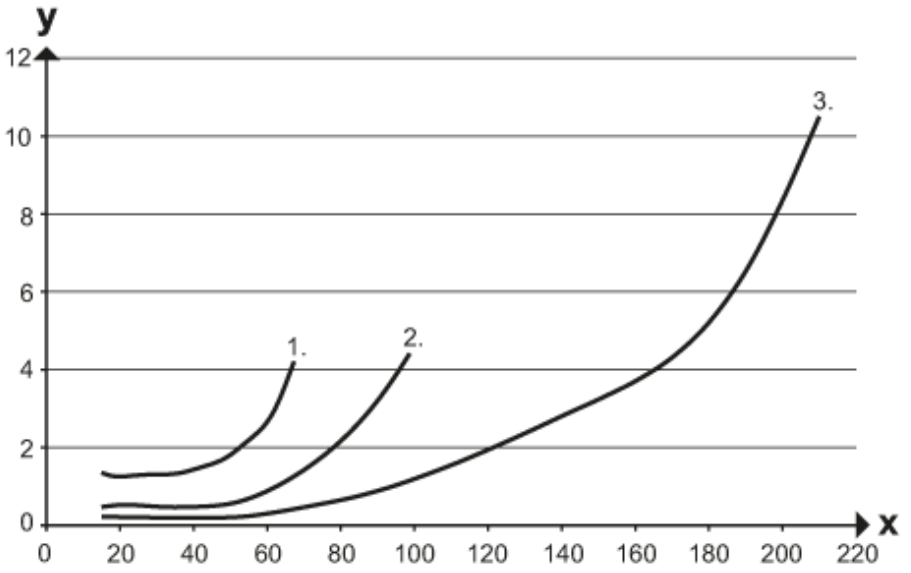

x: distance sensor/object [mm]

y: min. distance object/background [mm]

1 = object black (6 % remission) , background white (90 % remission)

2 = object grey (18 % remission) , background white (90 % remission)

3 = object white (90 % remission) , background white (90 % remission)