EVW168

Connecting cable with socket

ADOGH046SCS0005T04

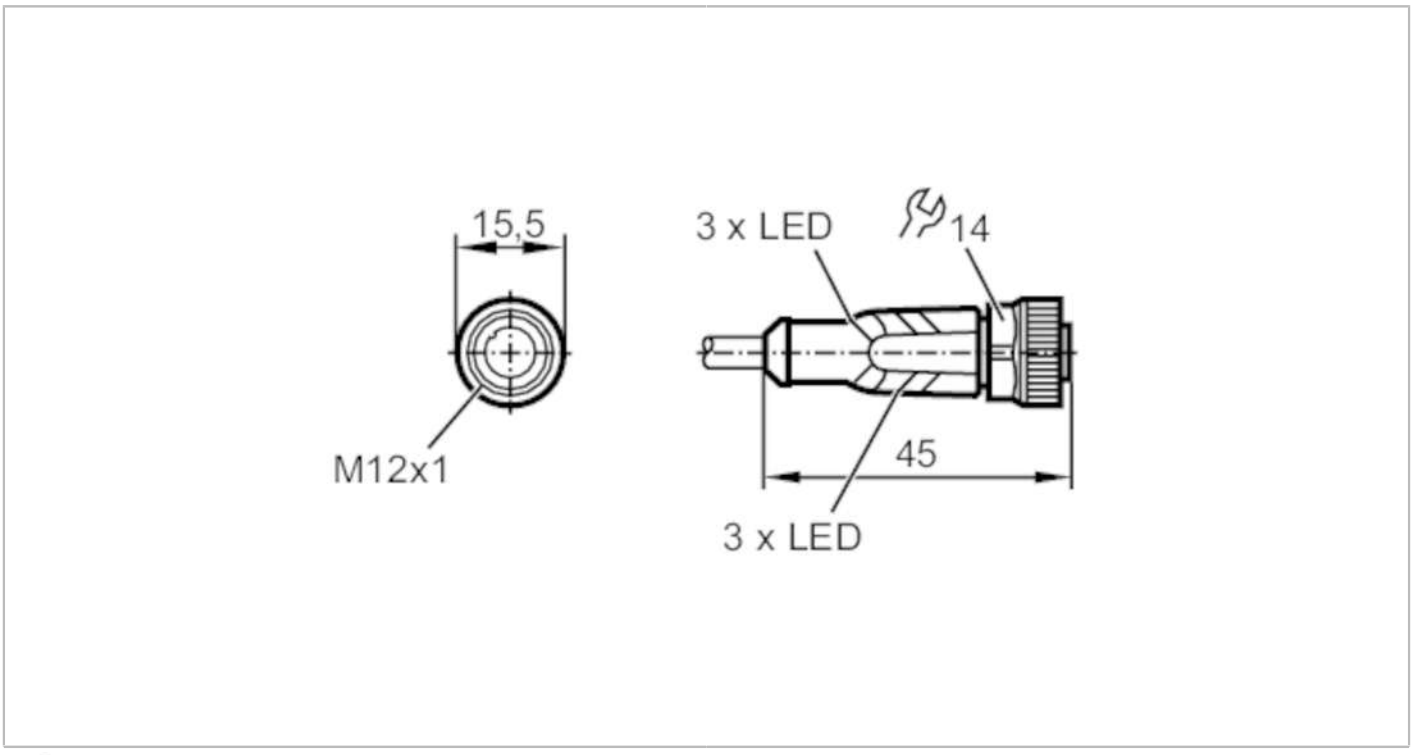

Application		
Application		welding applications
Free from silicone		yes
Electrical data		
Operating voltage	[V]	10...36 DC
Protection class		II
Max. current load total	[A]	4
Outputs		
Electrical design		PNP
Operating conditions		
Ambient temperature	[°C]	-25...90
Note on ambient temperature		cULus: ...75
Ambient temperature (moving)	[°C]	-25...90
Note on ambient temperature (moving)		cULus: ...75
Protection		IP 65; IP 67; IP 68; IP 69K

EVW168

Connecting cable with socket

ADOGH046SCS0005T04

Mechanical data						
Weight	[g]	188.4				
Dimensions	[mm]	15.5 x 15.5 x 45				
Materials		housing: TPU black transparent; Sealing: FKM				
Material nut		brass				
Drag chain suitability		bending radius for flexible use	min. 10 x cable diameter			
		travel speed	max. 3.3 m/s for a horizontal travel length of 5 m and max. acceleration of 5 m/s²			
		bending cycles		> 2 Mio.		
		torsional strain		± 180 °/m		

Displays / operating elements		
Display	switching status	4 x LED, yellow
	operation	2 x LED, green

Remarks	
Pack quantity	1 pcs.

Electrical connection

Cable: 5 m, PUR, Halogen-free, grey, Ø 4.9 mm; not irradiated (can be recycled); 4 x 0.34 mm² (42 x Ø 0.1 mm)

Cable: 5 m, PUR, Halogen-free, grey, Ø 4.9 mm; resistant to welding sparks; 4 x 0.34 mm² (42 x Ø 0.1 mm)

Connector: 1 x M12, straight; Locking: , brass, anti-spatter; Kontakte: gold-plated; Tightening torque: 0.6...1.5

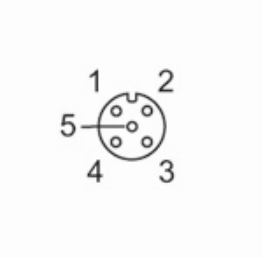

EVW168

Connecting cable with socket

ADOGH046SCS0005T04

Connection

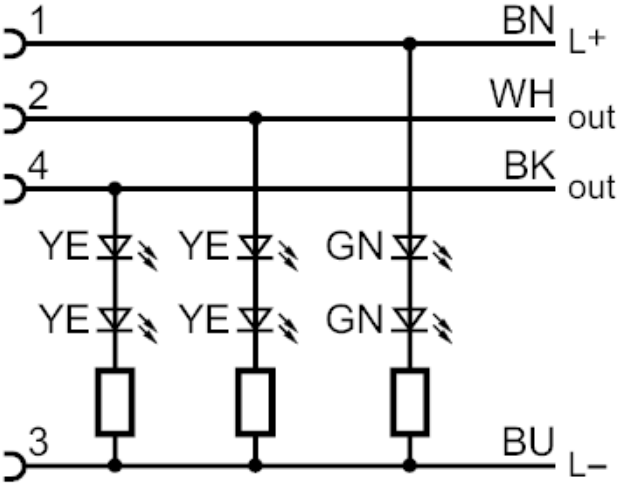

	Core colours :
BK =	black
BN =	brown
BU =	blue
WH =	white