Your Expert Partner for **Human Machine Interfaces**

Actuator

Distribution by
Rs-online

45-
2J31.15V0.000



https://rs-online.eao.com/component/45-2J31.1...

Your product:



45-2J31.15V0.000
Actuator

FRONT

Front dimension:	58 mm x 35 mm
Front form:	Rectangular
Front bezel colour:	Black
Front bezel material:	Plastic

MOUNTING

Design:	Raised
Mounting cut-out:	Ø 22.3 mm
Mounting type:	Panel mounting

OPERATING-/INDICATION PART

Lens colour:	White-Black
Lens material:	Plastic
Lens illumination:	Non illuminated
Lens shape:	Flush
Lens optics:	opaque
Lens type:	Raised above front bezel

MECHANICAL CHARACTERISTICS

Switching action:	Momentary
Switching system:	Slow-make switching element
Mechanical lifetime:	2 Mil. cycles of operation

Operating frequency:	Max. 3 600/h
Weight:	0.026 kg

AMBIENT CONDITION

IP front protection:	IP66, IP67, IP69K
Operating temperature:	– 25 °C ... + 70 °C
Storage temperature:	– 40 °C ... + 80 °C
Shock resistance:	According to IEC 60068-2-27: Sinusoidal half-wave 50 g / 11 ms
Vibration resistance:	According to IEC 60068-2-6: 10 ... 500 Hz: 5 g
Climate resistance:	During operation according to IEC 60721: 3K6, 3C3, 3S2, 3M6, 3B2

CERTIFICATE

REACH:	REACH compliant
RoHS:	RoHS compliant

OTHER

Short Description:	Actuator, Ø 22.3 mm, 58 mm x 35 mm, Flush, Non illuminated, White-Black, Plastic, opaque, Rectangular, Black, Plastic, Momentary, IP66, IP67, IP69K
Housing colour:	Black
Housing material:	Plastic
Wiring diagrams:	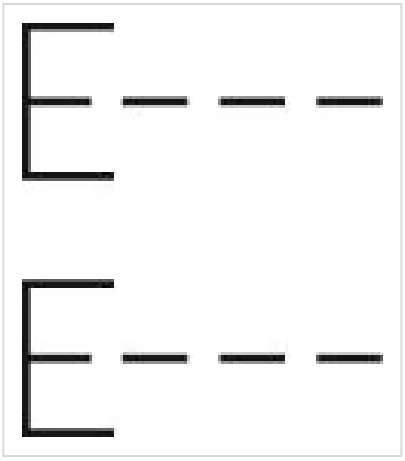

Component layouts:

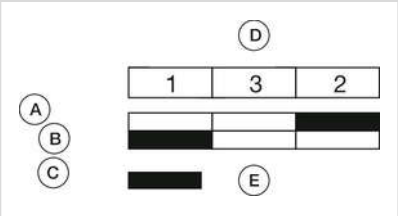

A = Switching action
B = green (white) button pressed
C = red (black) button pressed
D = Arrangement switching element correspondens to designation of front adaptor
E = Switching element actuated

Mounting cut-outs:

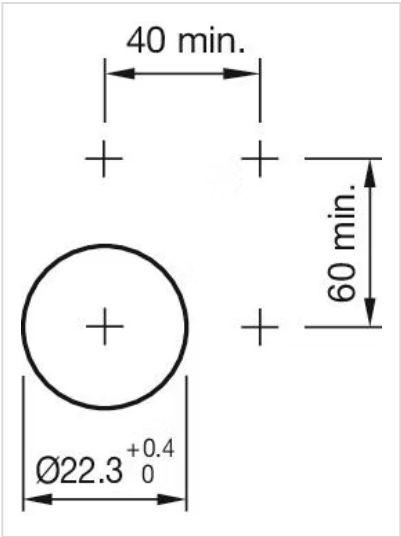

Dimension drawings:

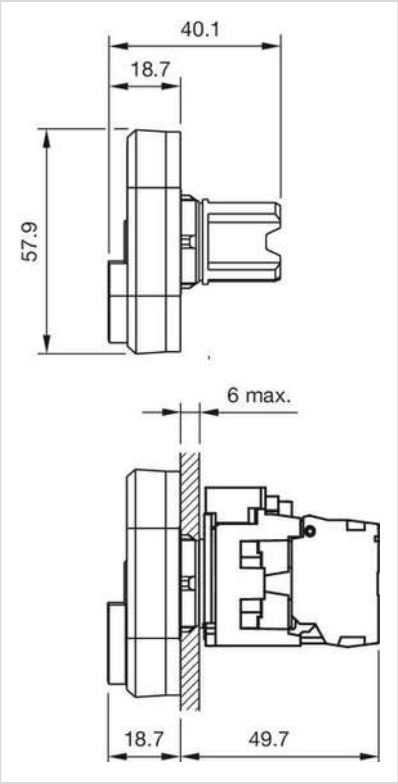
40.1
18.7
57.9
6 max.
18.7
49.7