SCHAEFFLER



FAG

29412-E1-XL

Axial spherical roller bearing

Schaeffler ID:
0390002730000

Axial spherical roller bearing 294..-E1-XL, no flanging ring

X-life

Technical information

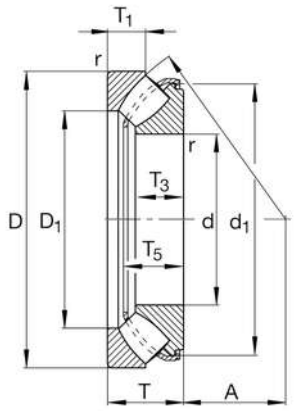

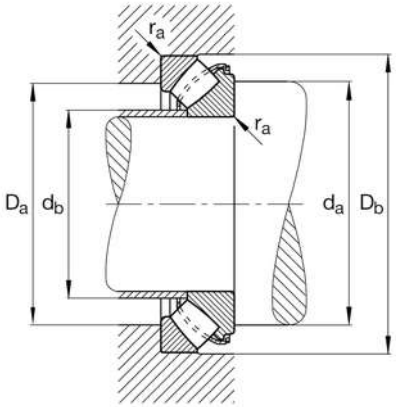

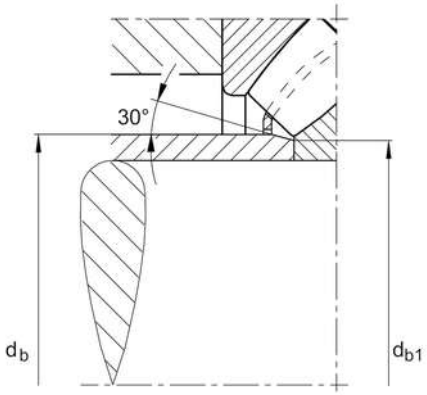

Main Dimensions & Performance Data

d	60 mm	Bore diameter
D	130 mm	Outside diameter
T	42 mm	Height
C_a	410,000 N	Basic dynamic load rating, axial
C_{0a}	940,000 N	Basic static load rating, axial
C_{ua}	117,000 N	Fatigue load limit, axial
n_G	6,000 1/min	Limiting speed
$n_{\vartheta r}$	2,850 1/min	Reference speed
	2.45 kg	Weight

Mounting dimensions

$d_{a\ min}$	95 mm	Minimum diameter shaft shoulder
$D_{a\ max}$	107 mm	Maximum diameter of housing shoulder
$d_{b\ max}$	67 mm	Maximum distance sleeve
$r_{a\ max}$	1.5 mm	Maximum recess radius

Dimensions

d_1	116.5 mm	Rip diameter shaft washer
r_{min}	1.5 mm	Minimum chamfer dimension
T_3	27 mm	Height of the shaft washer
T_5	37.5 mm	Distance shaft washer - cage
A	38 mm	Distance of the center point

Temperature range

T_{min}	-30 °C	Operating temperature min.
T_{max}	200 °C	Operating temperature max.

The datasheet is only an overview of dimensions and basic load ratings of the selected product. Please always observe all further information and guidelines for this product. For further information you can use the contact form on our website.