II5738

Inductive sensor

IIA2015-FRKG/PH RT

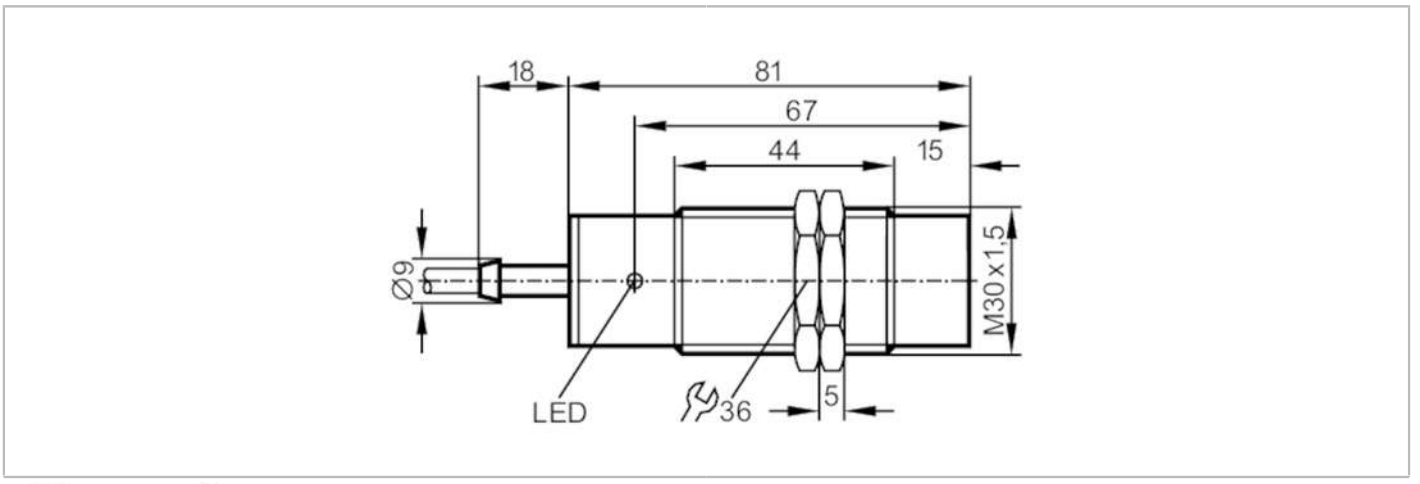

Product characteristics		
Electrical design		PNP/NPN
Output function		normally open / normally closed; (selectable)
Sensing range	[mm]	15
Housing		threaded type
Dimensions	[mm]	M30 x 1.5 / L = 81
Electrical data		
Operating voltage	[V]	10...55 DC
Current consumption	[mA]	15; (24 V)
Protection class		II
Reverse polarity protection		yes
Outputs		
Electrical design		PNP/NPN
Output function		normally open / normally closed; (selectable)
Max. voltage drop switching output DC	[V]	4.6
Minimum load current	[mA]	4
Permanent current rating of switching output DC	[mA]	400
Switching frequency DC	[Hz]	200
Short-circuit protection		yes
Type of short-circuit protection		pulsed
Overload protection		yes
Detection zone		
Sensing range	[mm]	15
Real sensing range Sr	[mm]	15 ± 10 %
Operating distance	[mm]	0...12.1
Accuracy / deviations		
Correction factor		steel: 1 / stainless steel: 0.7 / brass: 0.4 / aluminium: 0.3 / copper: 0.2

II5738

Inductive sensor

IIA2015-FRKG/PH RT

Hysteresis	[% of Sr]	1...15	
Switch point drift	[% of Sr]	-10...10	
Operating conditions			
Ambient temperature	[°C]	-25...80	
Protection		IP 67	
Tests / approvals			
EMC		EN 60947-5-2	
		EN 55011	class B
MTTF	[years]	1835	
Mechanical data			
Weight	[g]	253.5	
Housing		threaded type	
Mounting		non-flush mountable	
Dimensions	[mm]	M30 x 1.5 / L = 81	
Thread designation		M30 x 1.5	
Materials		brass nickel-plated; PBT	
Displays / operating elements			
Display		switching status	1 x LED, red
Accessories			
Items supplied		lock nuts: 2	
Remarks			
Pack quantity		1 pcs.	
Electrical connection			

Cable: 2 m, PUR / PVC; 2 x 0.5 mm²

Connection

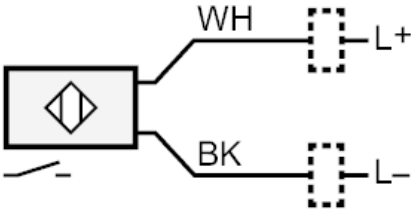

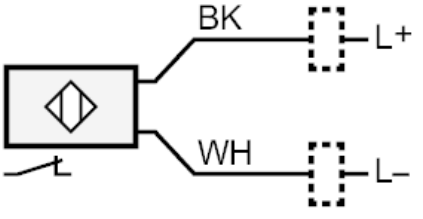

Core colours :
BK = black
WH = white