VALVES AND SOLENOID VALVES
SERIES 3

2x3/2, 3/2, 5/2 and 5/3-way CC CO CP
Ports: G1/8 and G1/4



Series 3 solenoid valves with G1/8 and G1/4 ports have been designed in the 3/2, 2 x 3/2, 5/2, 5/3 versions and with the following two devices of actuation:

- Electropneumatically actuated with mechanical spring return
- Electropneumatically actuated with external and internal air pressure supply

Series 3 valves are equipped with a manual override which allows a stable
operation and they can use Series U or G solenoids (22x22).

Pneumatically actuated valves 3/2 NC become NO when the supply is on connection 3.

General Data

Construction	Spool - type
Valve group	2x3/2 - 3/2 - 5/2 - 5/3-way CC CO CP
Materials	AL body, stainless steel spool, NBR seals
Ports	G1/8 - G1/4
Installation	In any position
Working temperature	0 ÷ 60°C (with dry air at -20°C)
Working pressure	See tables
Fluid	Filtered air, without lubrication. If lubricated air is used, it is recommended to use ISOVG32 oil. Once applied the lubrication should never be interrupted.

Products designed for industrial applications. General terms and conditions for sale are available on www.camozzi.com
This document contains a description of the products offered by Camozzi Automation at time of publication.
For more complete and up to date information about the Camozzi Automation product range, please refer to our online catalogue at https://shop.camozzi.com

Coding Example

3	3	8	D	-	015	-	02	IL	-	U7	7

3	SERIES
3	NUMBER OF WAYS - POSITIONS 3 = 3/2 NC 4 = 3/2 NO 5 = 5/2 6 = 5/3 CC 7 = 5/3 CO 8 = 5/3 CP 9 = 1x3/2 NC + 1x3/2 NO
8	PORTS 8 = G1/8 4 = G1/4
D	VERSION = Standard D = Double valve 2x3/2 L = For manifold assembly (only for solenoid valves 3/2 with G1/8 ports)
015	ACTUATION 011 = Double solenoid 015 = Single solenoid / spring return 016 = Single solenoid / pneumatic spring return E11 = Double solenoid external servo-command E15 = Single solenoid, external servo-command / spring return 033 = Pneumatic / pneumatic 035 = Pneumatic / spring return
02	SOLENOID INTERFACE 02 = Mech. sol. 22 x 22
IL	TYPE OF MANUAL OVERRIDE = Bistable, standard IL = Bistable, lever type (available on demand) IM = Monostable (available on demand)
U7	ENCAPSULATING MATERIAL / SOLENOID DIMENSIONS A8 = PPS / 30 x 30 G7 = PA / 22 x 22 G8 = PA / 30 x 30 (24 V DC only) G9 = PA / 22 x 58 H8 = PA 6 V0 / 30 x 30 U7 = PET / 22 x 22
7	SOLENOID VOLTAGE

Types of manual override

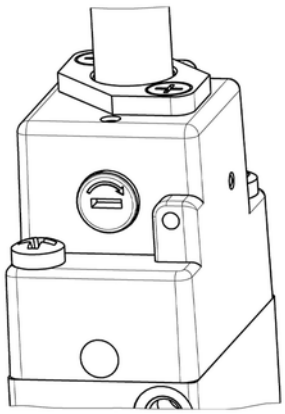

Example of solenoid valve with a bistable standard manual override.

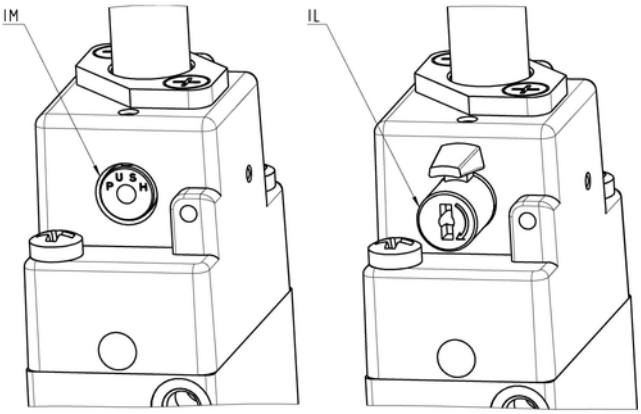

Example of solenoid monostable valve (IM) and bistable valve with a lever type manual override (IL).

Products designed for industrial applications. General terms and conditions for sale are available on www.camozzi.com
This document contains a description of the products offered by Camozzi Automation at time of publication.
For more complete and up to date information about the Camozzi Automation product range, please refer to our online catalogue at https://shop.camozzi.com

3/2-way solenoid valve, G1/8, monostable - Mod. 338..., Mod 348...



These solenoid valves, which have electropneumatic actuation and spring return, are available in the NC (closed) or NO (open) version.

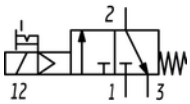

EV10

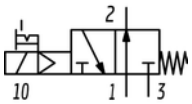

EV12

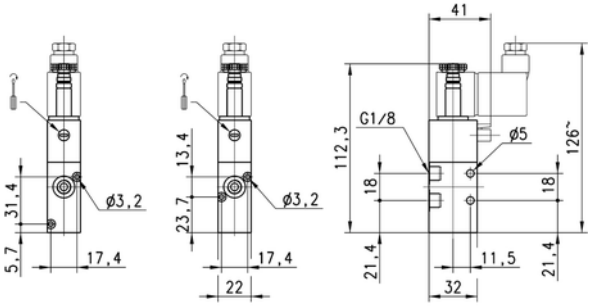

Mod.	Mounting	Function	Flow rate [Nl/min]	Operating pressure [bar]	Symbol
338-015-02	In-line	3/2 NC	700	2,5 ÷ 10	EV10
338L-015-02	On manifold	3/2 NC	700	2,5 ÷ 10	EV10
348-015-02	In-line	3/2 NO	700	2,5 ÷ 10	EV12
348L-015-02	On manifold	3/2 NO	700	2,5 ÷ 10	EV12
338L-015-02IL	In-line	3/2 NC	700	2,5 ÷ 10	EV10
348-015-02IL	On manifold	3/2 NO	700	2,5 ÷ 10	EV12

3/2-way solenoid valve, G1/8, bistable - Mod. 338...



These solenoid valves, which have electropneumatic actuation and return, assume the NC (closed) or NO (open) position depending on the last pulse received.

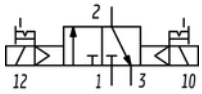

EV14

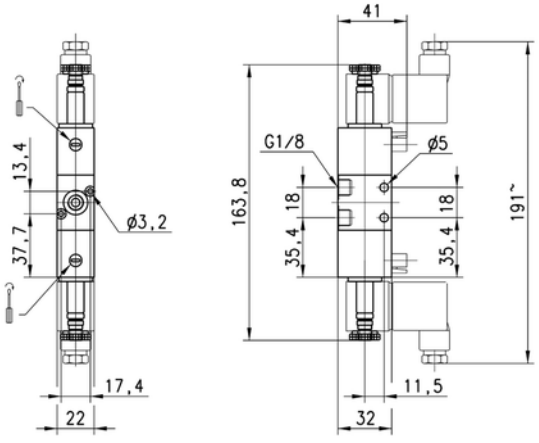

Mod.	Mounting	Function	Flow rate [Nl/min]	Operating pressure [bar]
338-011-02	In-line	3/2	700	1,5 ÷ 10
338L-011-02	On manifold	3/2	700	1,5 ÷ 10

Products designed for industrial applications. General terms and conditions for sale are available on www.camozzi.com
This document contains a description of the products offered by Camozzi Automation at time of publication.
For more complete and up to date information about the Camozzi Automation product range, please refer to our online catalogue at https://shop.camozzi.com

2x3/2-way solenoid valve, G1/8 - Mod. 338D..., 348D... e 398D...



These solenoid valves are available in versions with 2 x 3/2 valves in the same valve.

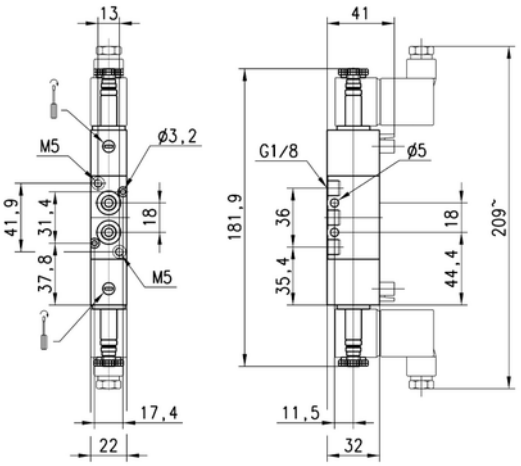

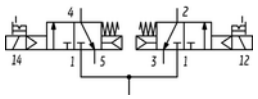

EV39

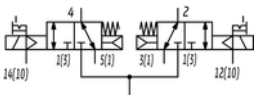

EV40

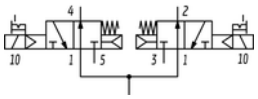

EV41

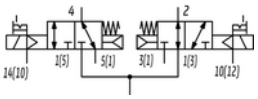

EV42

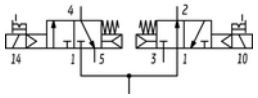

EV43

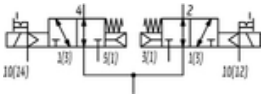

EV44

Mod.	Function	Flow rate [Nl/min]	Operating pressure [bar]	Pilot pressure [bar]	Symbol
338D-015-02	2x3/2 NC	700	2,5 ÷ 10	-	EV39
348D-015-02	2x3/2 NO	700	2,5 ÷ 10	-	EV41
338D-E15-02	2x3/2 NC	700	-0,9 ÷ 10	2,5 ÷ 10	EV40
348D-E15-02	2x3/2 NO	700	-0,9 ÷ 10	2,5 ÷ 10	EV44
398D-015-02	1x3/2 NC + 1x3/2 NO	700	2,5 ÷ 10	-	EV43
398D-E15-02	1x3/2 NC + 1x3/2 NO	700	-0,9 ÷ 10	2,5 ÷ 10	EV42

5/2-way solenoid valve, G1/8, monostable - Mod. 358...



These solenoid valves with electropneumatic actuation and mechanical or pneumatic spring return are suitable for controlling double-acting cylinders.

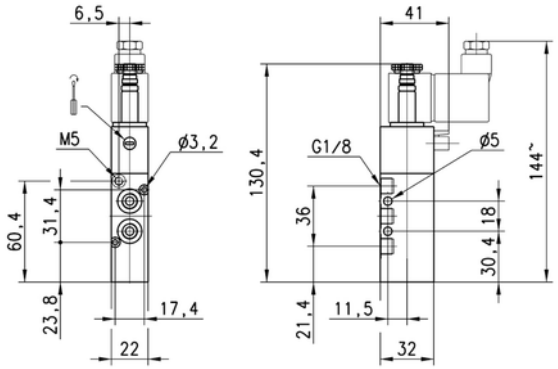

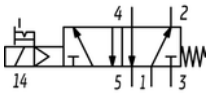

EV18

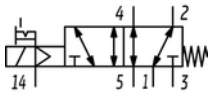

EV19

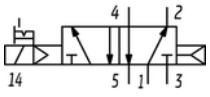

EV20

Mod.	Function	Flow rate [Nl/min]	Operating pressure [bar]	Pilot pressure [bar]	Symbol
358-015-02	5/2	700	2,5 ÷ 10	-	EV18
358-E15-02	5/2	700	-0,9 ÷ 10	2,5 ÷ 10	EV19
358-016-02	5/2	700	2,5 ÷ 10	-	EV20
358-015-02IL	5/2	700	2,5 ÷ 10	-	EV18
358-015-02EX	5/2	700	2,5 ÷ 10	-	EV18

Products designed for industrial applications. General terms and conditions for sale are available on www.camozzi.com
This document contains a description of the products offered by Camozzi Automation at time of publication.
For more complete and up to date information about the Camozzi Automation product range, please refer to our online catalogue at https://shop.camozzi.com

5/2-way solenoid valve, G1/8, bistable - Mod. 358...



These solenoid valves with electropneumatic actuation and return are suitable for controlling double-acting cylinders.

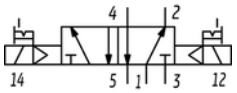

EV23

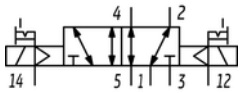

EV25

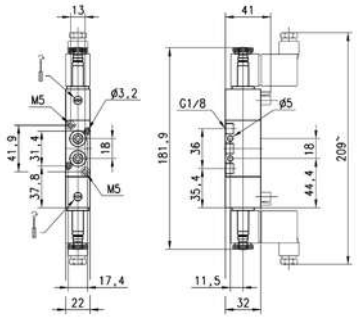

Mod.	Function	Flow rate [Nl/min]	Operating pressure [bar]	Pilot pressure [bar]	Symbol
358-011-02	5/2	700	1,5 ÷ 10	-	EV23
358-E11-02	5/2	700	-0,9 ÷ 10	1,5 ÷ 10	EV25
358-011-02IL	5/2	700	1,5 ÷ 10	-	EV23

5/3-way solenoid valve, G1/8, - Mod. 368... Mod. 378... Mod. 388...



CC = Centres Closed
CO = Centres Open
CP = Pressure Centres

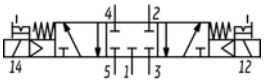

EV28

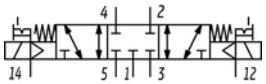

EV29

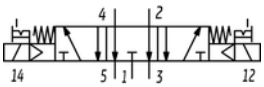

EV32

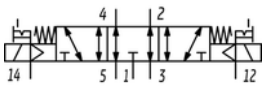

EV34

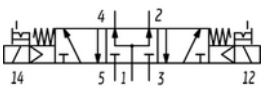

EV36

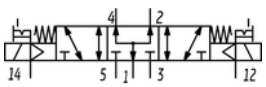

EV37

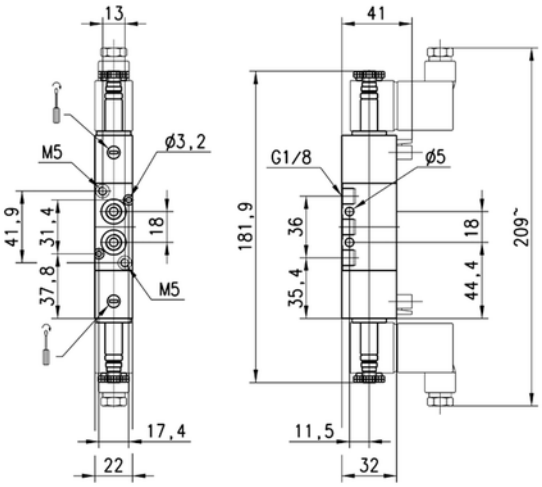

Mod.	Function	Flow rate [Nl/min]	Operating pressure [bar]	Pilot pressure [bar]	Symbol
368-011-02	5/3 CC	700	2 ÷ 10	-	EV28
368-E11-02	5/3 CC	700	-0,9 ÷ 10	2 ÷ 10	EV29
378-011-02	5/3 CO	700	2-10	-	EV32
378-E11-02	5/3 CO	700	-0,9 ÷ 10	2 ÷ 10	EV34
388-011-02	5/3 CP	700	2 ÷ 10	-	EV36
388-E11-02	5/3 CP	700	-0,9 ÷ 10	2 ÷ 10	EV37

Products designed for industrial applications. General terms and conditions for sale are available on www.camozzi.com
This document contains a description of the products offered by Camozzi Automation at time of publication.
For more complete and up to date information about the Camozzi Automation product range, please refer to our online catalogue at https://shop.camozzi.com

3/2-way solenoid valve, G1/4, monostable - Mod. 334... Mod 344...



These solenoid valves, which have electropneumatic actuation and spring return, are available in the NC (closed) or NO (open) version.

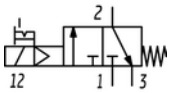

EV10

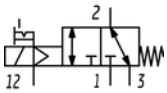

EV11

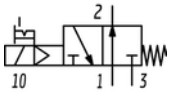

EV12

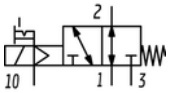

EV13

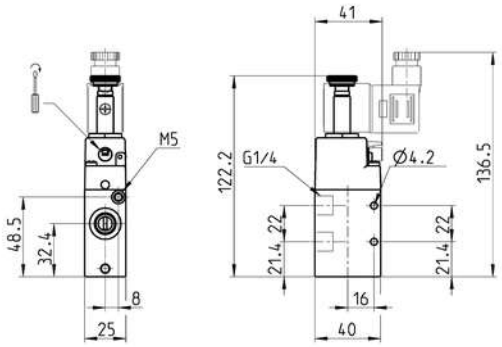

Mod.	Mounting	Function	Flow rate [Nl/min]	Operating pressure [bar]	Pilot pressure [bar]	Symbol
334-015-02	In-line	3/2 NC	1300	2,5 ÷ 10	-	EV10
334-E15-02	In-line	3/2 NC	1300	-0,9 ÷ 10	2,5 ÷ 10	EV11
344-015-02	In-line	3/2 NO	1300	2,5 ÷ 10	-	EV12
344-E15-02	In-line	3/2 NO	1300	-0,9 ÷10	2,5 ÷ 10	EV13

3/2-way solenoid valve, G1/4, bistable - Mod. 334...



These solenoid valves, which have electropneumatic actuation and return assume the NC (closed) or NO (open) position depending on ther last pulse received.

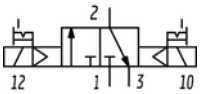

EV14

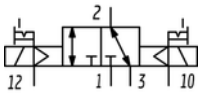

EV15

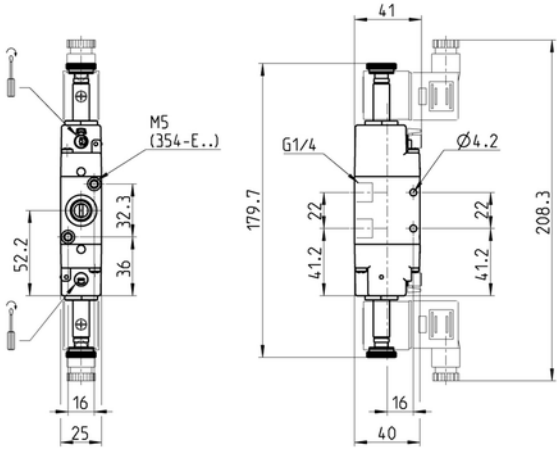

Mod.	Mounting	Function	Flow rate [Nl/min]	Operating pressure [bar]	Pilot pressure [bar]	Symbol
334-011-02	In-line	3/2	1300	1,5 ÷ 10	-	EV14
334-E11-02	In-line	3/2	1300	1,5 ÷ 10	2,5 ÷ 10	EV15

Products designed for industrial applications. General terms and conditions for sale are available on www.camozzi.com
This document contains a description of the products offered by Camozzi Automation at time of publication.
For more complete and up to date information about the Camozzi Automation product range, please refer to our online catalogue at https://shop.camozzi.com

2x3/2-way solenoid valve, G1/4 Mod. 334D... 344D... and 394D...



These solenoid valves are available in versions with 2 x 3/2 valves in the same valve.

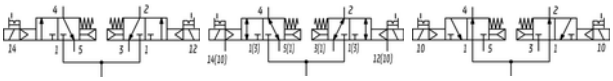

EV39 *EV40* *EV41*

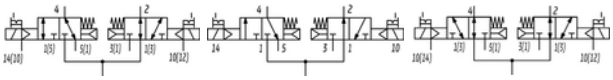

EV42 *EV43* *EV44*

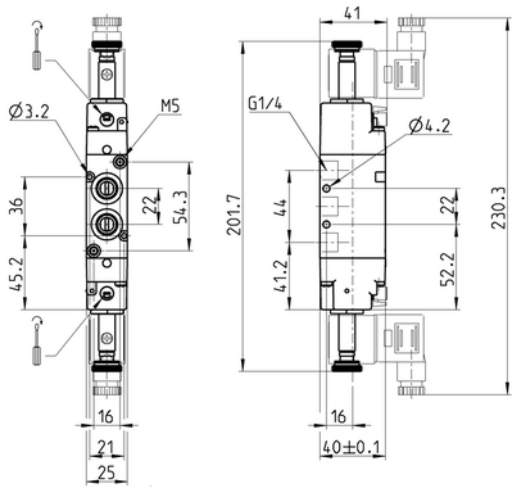

Mod.	Function	Flow rate [Nl/min]	Operating pressure [bar]	Pilot pressure [bar]	Symbol
334D-015-02	2x3/2 NC	1200	2,5 ÷ 10	-	EV39
344D-015-02	2x3/2 NO	1050	2,5 ÷ 10	-	EV41
334D-E15-02	2x3/2 NC	1200	-0,9 ÷ 10	2,5 ÷ 10	EV40
344D-E15-02	2x3/2 NO	1050	-0,9 ÷ 10	2,5 ÷ 10	EV44
394D-015-02	1x3/2 NC + 1x3/2 NO	1050	2 ÷ 10	-	EV43
394D-E15-02	1x3/2 NC + 1x3/2 NO	1050	-0,9 ÷ 10	2,5 ÷ 10	EV42

5/2-way solenoid valve, G1/4, monostable - Mod. 354...



These solenoid valves, which have electropneumatic actuation and spring return, are suitable for operating double-acting cylinders.

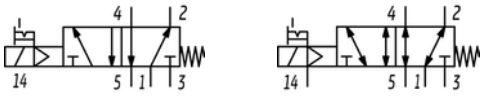

EV18 *EV19*

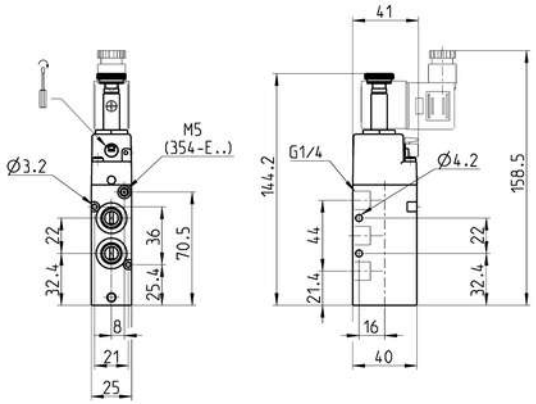

Mod.	Function	Flow rate [Nl/min]	Operating pressure [bar]	Pilot pressure [bar]	Symbol
354-015-02	5/2	1300	2,5 ÷ 10	-	EV18
354-E15-02	5/2	1300	-0,9 ÷ 10	2,5 ÷ 10	EV19

Products designed for industrial applications. General terms and conditions for sale are available on www.camozzi.com
This document contains a description of the products offered by Camozzi Automation at time of publication.
For more complete and up to date information about the Camozzi Automation product range, please refer to our online catalogue at https://shop.camozzi.com

5/2-way solenoid valve, G1/4, bistable - Mod. 354...



These solenoid valves, which have electropneumatic actuation and spring return, are suitable for operating double-acting cylinders.

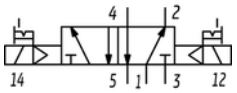

EV23

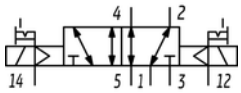

EV25

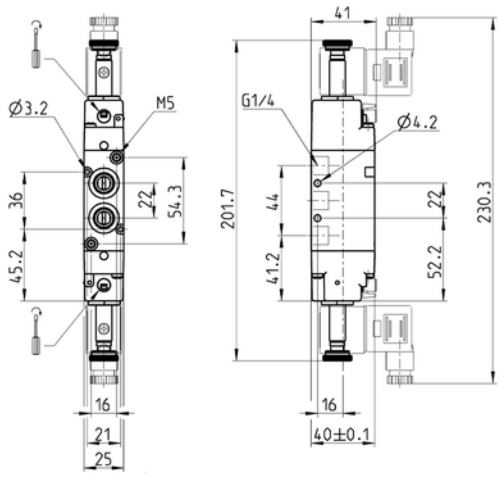

Mod.	Function	Flow rate [Nl/min]	Operating pressure [bar]	Pilot pressure [bar]	Symbol
354-011-02	5/2	1300	1,5 ÷ 10	-	EV23
354-E11-02	5/2	1300	-0,9 ÷ 10	2,5 ÷ 10	EV25

5/3-way solenoid valve, G1/4, - Mod. 364... Mod. 374... Mod. 384...



CC = Centres Closed
CO = Centres Open
CP = Pressure Centres

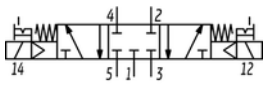

EV28

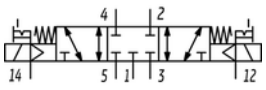

EV29



EV32

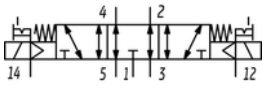

EV34

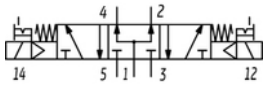

EV36

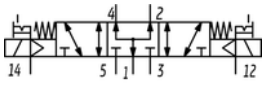

EV37

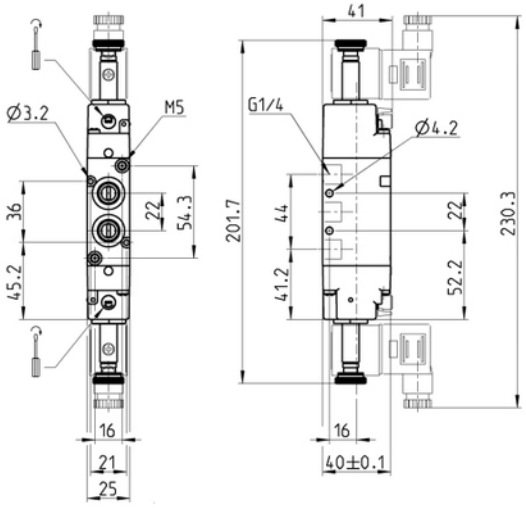

Mod.	Function	Flow rate [Nl/min]	Operating pressure [bar]	Pilot pressure [bar]	Symbol
364-011-02	5/3 CC	1200	2,5 ÷ 10	-	EV28
364-E11-02	5/3 CC	1200	-0,9 ÷ 10	2,5 ÷ 10	EV29
374-011-02	5/3 CO	1200	2,5 ÷ 10	-	EV32
374-E11-02	5/3 CO	1200	-0,9 ÷ 10	2,5 ÷ 10	EV34
384-011-02	5/3 CP	1200	2,5 ÷ 10	-	EV36
384-E11-02	5/3 CP	1200	-0,9 ÷ 10	2,5 ÷ 10	EV37

Products designed for industrial applications. General terms and conditions for sale are available on www.camozzi.com
This document contains a description of the products offered by Camozzi Automation at time of publication.
For more complete and up to date information about the Camozzi Automation product range, please refer to our online catalogue at https://shop.camozzi.com

3/2-way valve, G1/8 or G1/4, monostable



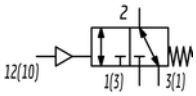

VP01

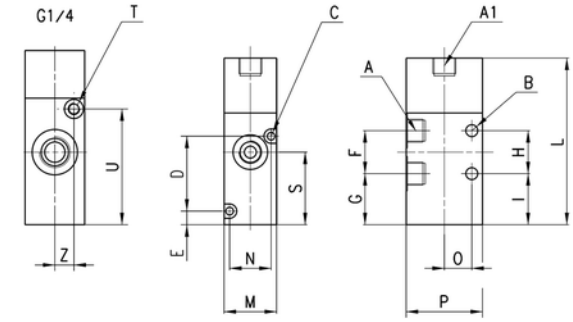

Mod.	Mounting	Function	Flow rate [Nl/min]	Min. pilot press. [bar]	Working press. [bar]	A	A1	B	C	D	E	F	G	H	I	L	M	N	O	P	S	T	U	Z
338-035	In-line	3/2 NC	700	2,5	-0,9 ÷ 10	G1/8	G1/8	5	3,2	-	5,7	18	21,4	18	21,4	69,8	22	-	11,5	32	30,4	-	-	-
338L-035	On manifold	3/2 NC	700	2,5	-0,9 ÷ 10	G1/8	G1/8	-	3,2	31,4	5,7	18	21,4	-	21,4	69,8	22	17,4	11,5	32	30,4	-	-	-
334-035	In-line	3/2 NC	1300	3	-0,9 ÷ 10	G1/4	-	4,1	-	-	-	22	21,4	22	21,4	73	25	-	16	40	32,4	M5	48,5	8

3/2-way valve, G1/8 or G1/4, bistable



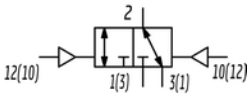

VP02

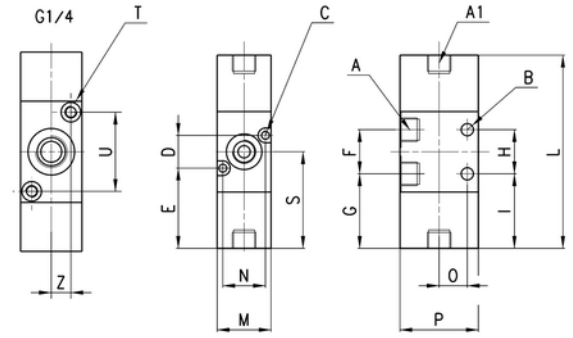

Mod.	Mounting	Function	Flow rate [Nl/min]	Min. pilot press. [bar]	Working press. [bar]	A	A1	B	C	D	E	F	G	H	I	L	M	N	O	P	S	T	U	Z
338-033	In-line	3/2	700	1,5	-0,9 ÷ 10	G1/8	G1/8	5	-	-	-	18	30,4	18	30,4	78,8	22	-	11,5	32	41,7	-	-	-
338L-033	On manifold	3/2	700	1,5	-0,9 ÷ 10	G1/8	G1/8	5	3,2	13,4	32,7	18	30,4	-	30,4	78,8	22	17,4	-	32	41,7	-	-	-
334-033	In-line	3/2	1300	2,5	-0,9 ÷ 10	G1/4	-	4,1	-	-	-	22	29,7	22	29,7	81,3	25	-	16	40	40,7	M5	32,3	8

Products designed for industrial applications. General terms and conditions for sale are available on www.camozzi.com
This document contains a description of the products offered by Camozzi Automation at time of publication.
For more complete and up to date information about the Camozzi Automation product range, please refer to our online catalogue at https://shop.camozzi.com

5/2-way valve, G1/8 or G1/4, monostable

In-line or manifold mounting



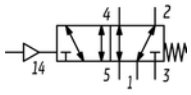

VP04

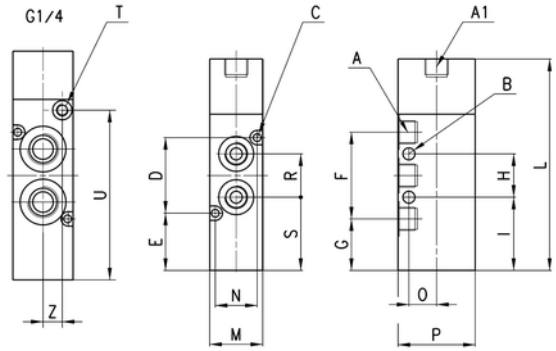

Mod.	Function	Flow rate [Nl/min]	Min. pilot press. [bar]	Working press. [bar]	A	A1	B	C	D	E	F	G	H	I	L	M	N	O	P	S	T	U	Z
358-035	5/2	700	2,5	-0,9 ÷ 10	G1/8	G1/8	5	3,2	31,4	23,8	36	21,4	18	30,4	87,8	22	17,4	11,5	32	30,4	-	-	-
354-035	5/2	1300	3	-0,9 ÷ 10	G1/4	-	4,1	3,2	36	25,4	44	21,4	22	30,4	95	25	21	16	40	32,4	M5	70,5	8

5/2-way valve, G1/8 or G1/4, bistable

In-line or manifold mounting



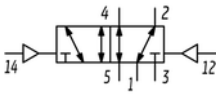

VP06

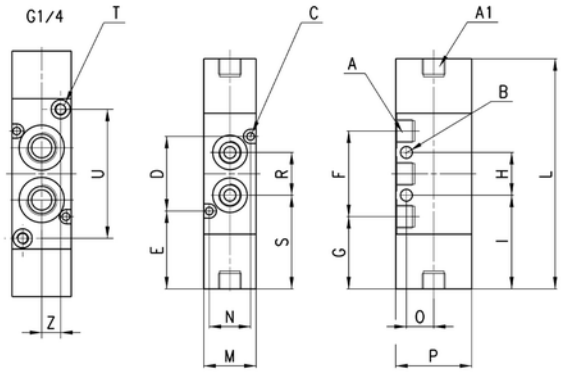

Mod.	Function	Flow rate [Nl/min]	Min pilot pressure [bar]	Min pilot pressure [bar]	A	A1	B	C	D	E	F	G	H	I	L	M	N	O	P	S	T	U	Z
358-033	5/2	700	1,5	-0,9 ÷ 10	G1/8	G1/8	5	3,2	31,4	32,8	36	30,4	18	39,4	96,8	22	17,4	11,5	32	39,4	-	-	-
354-033	5/2	1300	2,5	-0,9 ÷ 10	G1/4		4,1	3,2	36	33,7	44	29,7	22	40,7	103,3	25	21	16	40	40,7	M5	54,3	8

Products designed for industrial applications. General terms and conditions for sale are available on www.camozzi.com
This document contains a description of the products offered by Camozzi Automation at time of publication.
For more complete and up to date information about the Camozzi Automation product range, please refer to our online catalogue at https://shop.camozzi.com

5/3-way valve, G1/8 or G1/4

In-line or manifold mounting



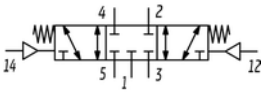

VP08 *VP09*

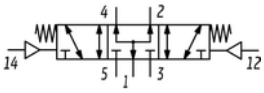

VP10

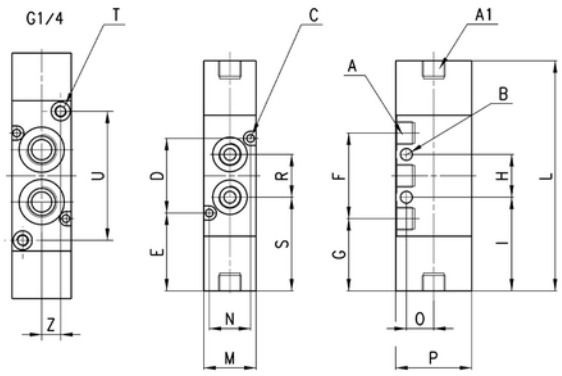

Mod.	Function	Flow rate [Nl/min]	Min. pilot pr. (bar)	Working pr. (bar)	A	A1	B	C	D	E	F	G	H	I	L	M	N	O	P	S	T	U	Z	Symb.
368-033	5/3 CC	700	2,5	-0,9 ÷ 10	G1/8	G1/8	5	3,2	31,4	32,8	36	30,4	18	39,4	96,8	22	17,4	11,5	32	39,4	-	-	-	VP08
364-033	5/3 CC	1200	2,5	-0,9 ÷ 10	G1/4	-	4,1	3,2	36	33,7	44	29,7	22	40,7	103,3	25	21	16	40	40,7	M5	54,3	8	VP08
378-033	5/3 CO	700	2,5	-0,9 ÷ 10	G1/8	G1/8	5	3,2	31,4	32,8	36	30,4	18	39,4	96,8	22	17,4	11,5	32	39,4	-	-	-	VP09
374-033	5/3 CO	1050	2,5	-0,9 ÷ 10	G1/4	-	4,1	3,2	36	33,7	44	29,7	22	40,7	103,3	25	21	16	40	40,7	M5	54,3	8	VP09
388-033	5/3 CP	700	2,5	-0,9 ÷ 10	G1/8	G1/8	5	3,2	31,4	32,8	36	30,4	18	39,4	96,8	22	17,4	11,5	32	39,4	-	-	-	VP10
384-033	5/3 CP	1050	2,5	-0,9 ÷ 10	G1/4	-	4,1	3,2	36	33,7	44	29,7	22	40,7	103,3	25	21	16	40	40,7	M5	54,3	8	VP10

2x3/2-way valve, G1/8 or G1/4

In-line or manifold mounting.



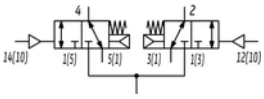

VP11 *VP12*

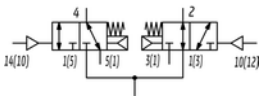

VP13

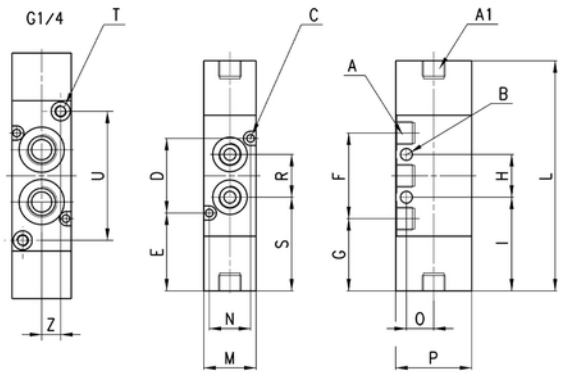

Mod.	Function	Flow rate [Nl/min]	Min. pilot pr. (bar)	Working pr. (bar)	A	A1	B	C	D	E	F	G	H	I	L	M	N	O	P	S	T	U	Z	Symb.
0 mm	2x3/2 NC	700	2,5	-0,9 ÷ 10	G1/8	G1/8	5	3,2	31,4	32,8	36	30,4	18	39,4	96,8	22	17,4	11,5	32	39,4	-	-	-	VP11
334D-035	2x3/2 NC	1050	2,5	-0,9 ÷ 10	G1/4	-	4,1	3,2	36	33,7	44	29,7	22	40,7	103,3	25	21	16	40	40,7	M5	54,3	8	VP11
348D-035	2x3/2 NO	700	2,5	-0,9 ÷ 10	G1/8	G1/8	5	3,2	31,4	32,8	36	30,4	18	39,4	96,8	22	17,4	11,5	32	39,4	-	-	-	VP12
344D-035	2x3/2 NO	1050	2,5	-0,9 ÷ 10	G1/4	-	4,1	3,2	36	33,7	44	29,7	22	40,7	103,3	25	21	16	40	40,7	M5	54,3	8	VP12
398D-035	2x3/2 NC/NO	700	2,5	-0,9 ÷ 10	G1/8	G1/8	5	3,2	31,4	32,8	36	30,4	18	39,4	96,8	22	17,4	11,5	32	39,4	-	-	-	VP13
394D-035	2x3/2 NC/NO	1050	2,5	-0,9 ÷ 10	G1/4	-	4,1	3,2	36	33,7	44	29,7	22	40,7	103,3	25	21	16	40	40,7	M5	54,3	8	VP13

Products designed for industrial applications. General terms and conditions for sale are available on www.camozzi.com
This document contains a description of the products offered by Camozzi Automation at time of publication.
For more complete and up to date information about the Camozzi Automation product range, please refer to our online catalogue at https://shop.camozzi.com

Manifold bars with separate exhausts (low version)



Supplied with:
2x feet
1x manifold
1x inlet fitting
1x plug
4x washers

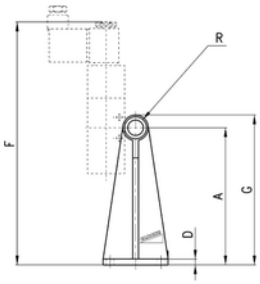

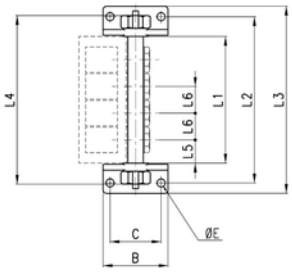

Mod.	Nr of valves	A	B	C	D	ØE	F	G	R	L1	L2	L3	L4	L5	L6	Suitable for Series
CNV-318-2	2	73	56	44	5	7	178	83	G1/4	63	97	115	99	20	23	3 - G1/8
CNV-318-3	3	73	56	44	5	7	178	83	G1/4	86	120	138	119	20	23	3 - G1/8
CNV-318-4	4	73	56	44	5	7	178	83	G1/4	109	143	161	142	20	23	3 - G1/8
CNV-318-5	5	73	56	44	5	7	178	83	G1/4	132	166	184	165	20	23	3 - G1/8
CNV-318-6	6	73	56	44	5	7	178	83	G1/4	155	189	207	188	20	23	3 - G1/8

The fixing screws of the valves Mod. 1631 01-1/8 must be ordered separately.

Manifold bars with separate exhausts (high version)



Supplied with:
2x feet
1x manifold
1x inlet fitting
1x plug
4x washers

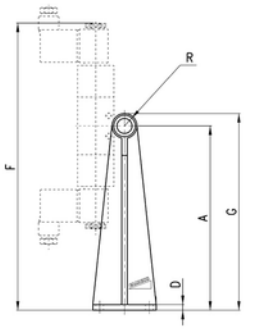

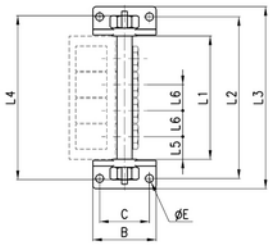

Mod.	Nr of valves	A	B	C	D	ØE	F	G	R	L1	L2	L3	L4	L5	L6	Suitable for Series
CNV-328-2	2	118	56	44	5	7	223	128	G1/4	63	97	115	99	20	23	3 - G1/8
CNV-328-3	3	118	56	44	5	7	223	128	G1/4	86	120	138	119	20	23	3 - G1/8
CNV-328-4	4	118	56	44	5	7	223	128	G1/4	109	143	161	142	20	23	3 - G1/8
CNV-328-5	5	118	56	44	5	7	223	128	G1/4	132	166	184	165	20	23	3 - G1/8
CNV-328-6	6	118	56	44	5	7	223	128	G1/4	155	189	207	188	20	23	3 - G1/8

The fixing screws of the valves Mod. 1631 01-1/8 must be ordered separately.

Products designed for industrial applications. General terms and conditions for sale are available on www.camozzi.com
This document contains a description of the products offered by Camozzi Automation at time of publication.
For more complete and up to date information about the Camozzi Automation product range, please refer to our online catalogue at https://shop.camozzi.com

Initial / final Module with three positions - Mod. CNVL-*H3



Supplied with:
3x interface O-Rings manifold/manifold;
2x fixing nuts;
2x junction plugs;
9x interface seals valve/manifold (CNVL-3H3) or
3x interface seals valve/manif. (CNVL-4H3)
6x fixing screws for valves

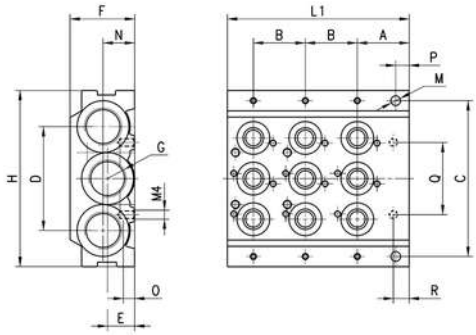

Mod.	A	B	C	D	E	F	H	L1	M	N	O	P	Q	R	G
CNVL-3H3	23	23	69.2	46	12	29	78	80.5	4.3	14	5	6	32	7	3/8
CNVL-4H3	26	26	88	60	14	29	98	91	4.3	-	5	5	38	7	1/2

CNVL-3H3: for Series 3, G1/8
CNVL-4H3: for Series 3, G1/4

Initial / final Module with 2 positions - Mod. CNVL-*H2



Supplied with:
3x interface O-Rings manifold/manifold
2x fixing nuts
2x junction plugs
6x interface seals valve/manifold (CNVL-3H2) or
2x interface seals valve/manif. (CNVL-4H2)
4x fixing screws for valves

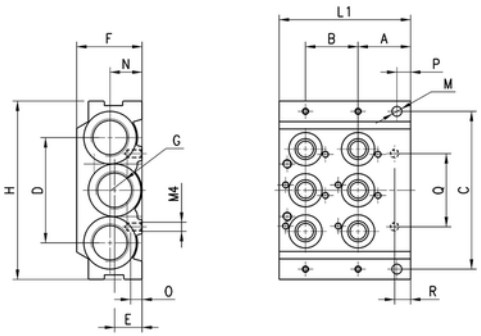

Mod.	A	B	C	D	E	F	H	L1	M	N	O	P	Q	R	G
CNVL-3H2	23	23	69.2	46	12	29	78	57.5	4.3	14	5	6	32	7	3/8
CNVL-4H2	26	26	88	60	14	29	98	65	4.3	-	5	5	38	7	1/2

CNVL-3H2: for Series 3, G1/8
CNVL-4H2: for Series 3, G1/4

Intermediate module with 3 positions - Mod. CNVL-*I3



Supplied with:
3x interface O-Rings manifold/manifold
2x fixing nuts
2x junction plugs
9x interface seals valve/manifold (CNVL-3I3) or
3x interface seals valve/manif. (CNVL-4I3)
6x fixing screws for valves

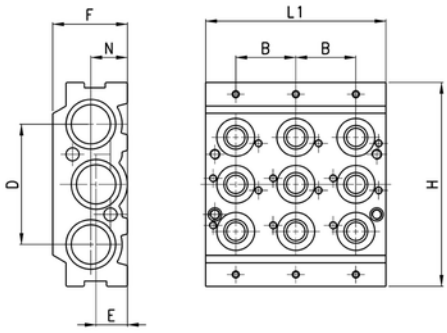

Mod.	B	D	E	F	H	L1	N
CNVL-3I3	23	46	12	29	78	69	14
CNVL-4I3	26	60	14	29	98	78	-

CNVL-3I3: for Series 3, G1/8
CNVL-4I3: for Series 3, G1/4

Products designed for industrial applications. General terms and conditions for sale are available on www.camozzi.com
This document contains a description of the products offered by Camozzi Automation at time of publication.
For more complete and up to date information about the Camozzi Automation product range, please refer to our online catalogue at https://shop.camozzi.com

Intermediate module with 2 positions - Mod. CNVL-*I2



Supplied with:
3x interface O-Rings manifold/manifold
2x fixing nuts
2x junction plugs
6x interface seals valve/manifold (CNVL-3I2) or
2x interface seals valve/manif. (CNVL-4I2)
4x fixing screws for valves

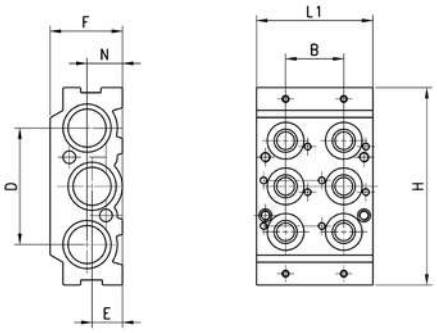

Mod.	B	D	E	F	H	L1	N
CNVL-3I2	23	46	12	29	78	46	14
CNVL-4I2	26	60	14	29	98	52	-

CNVL-3I2: for Series 3, G1/8
CNVL-4I2: for Series 3, G1/4

Intermediate module with 1 position - Mod. CNVL-*I1



Supplied with:
3x interface O-Rings manifold/manifold
2x fixing nuts
2x junction plugs
3x interface seals valve/manifold (CNVL-3I1) or
1x interface seal valve/manif. (CNVL-4I1)
2x fixing screws for valves

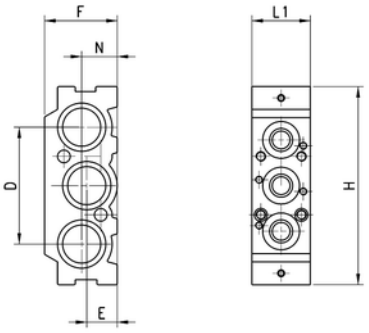

Mod.	D	E	F	H	L1	N
CNVL-3I1	46	12	29	78	23	14
CNVL-4I1	60	14	29	98	26	-

CNVL-3I1: for Series 3, G1/8
CNVL-4I1: for Series 3, G1/4

Terminal module Mod. CNVL-*H



Supplied with:
3x interface O-Rings
manifold/manifold
2x fixing nuts
2x junction plugs

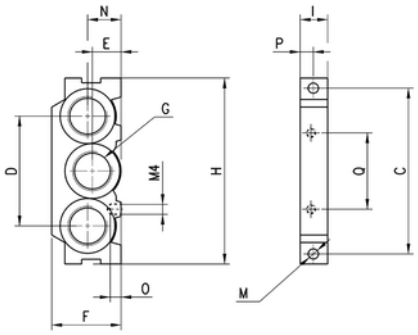

Mod.	C	D	E	F	H	I	M	N	O	P	Q	G
CNVL-3H	69,5	46	12	29	78	11,5	4,3	14	5	6	32	3/8
CNVL-4H	88	60	14	29	98	13	4,3	-	5	8	29	1/2

CNVL-3H: for Series 3, G1/8
CNVL-4H: for Series 3, G1/4

Products designed for industrial applications. General terms and conditions for sale are available on www.camozzi.com
This document contains a description of the products offered by Camozzi Automation at time of publication.
For more complete and up to date information about the Camozzi Automation product range, please refer to our online catalogue at https://shop.camozzi.com

Interface module manifold between Series 3 G1/8 and G1/4



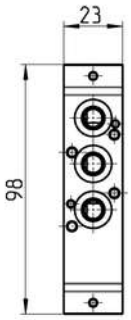

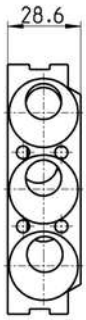

Supplied with:
3x interface seal
2x screws
2x pins
4x plugs
6x O-Rings

Mod.
CNVL-4H-3H

It is possible to seat 1 valve, Series 3 with G1/8 port.

Intermediate plate for additional inlet and exhaust pressure



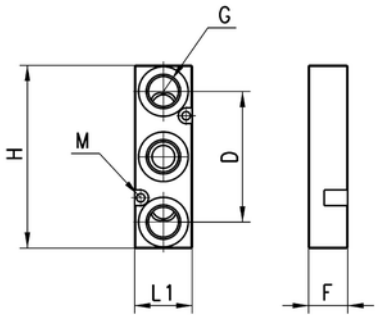

Supplied with:
3x O-Rings
2x fixing screws

Mod.	G	H	M	F	L1	D	F
CNVL-3P	G1/4	70	3,2	29	22	50	29
CNVL-4P	G1/4	73	3,2	29	25	50	29

CNVL-3P: for Series 3, G1/8
CNVL-4P: for Series 3, G1/4

Separation diaphragm



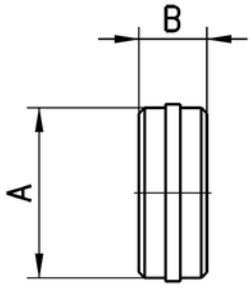



For separation of channel:
1, 3, 5

Supplied with:
1x diaphragm

If you need cod. U, please order 1x piece.
If you need cod. J, please order 2x pieces.
If you need cod. T, please order 3x pieces.

Mod.	A	B	
CNVL-3H-TP	15,6	6	For Series 3, G1/8
CNVL-4H-TP	23,8	8	For Series 3, G1/4

Products designed for industrial applications. General terms and conditions for sale are available on www.camozzi.com
This document contains a description of the products offered by Camozzi Automation at time of publication.
For more complete and up to date information about the Camozzi Automation product range, please refer to our online catalogue at https://shop.camozzi.com

Blanking plug Mod. TCNVL for manifolds



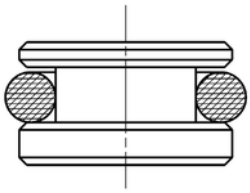

Supplied with:
1x blanking plug
1x O-Ring

TCNVL/3: for Series 4, G1/8
TCNVL/5: for Series 4, G1/4
TCNVL/6: for Series 4, G3/8

Mod.	
TCNVL/3	For Series 3, G1/8
TCNVL/5	For Series 3, G1/4

Blanking plate Mod. CNVL for manifolds



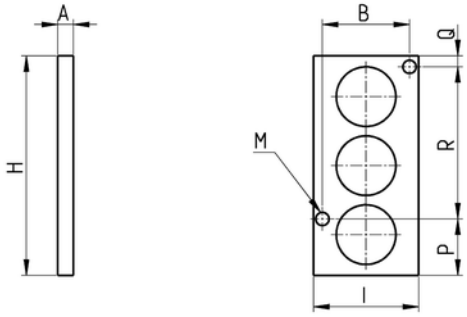

Supplied with:
2x fixing screws
3x O-Rings

CNVL/2: for Series 4, G1/8
CNVL/3: for Series 4, G1/4
CNVL/6: for Series 4, G3/8

Mod.	
CNVL/1	For Series 3, G1/8
CNVL/4	For Series 3, G1/4"

Solenoids Mod. A8...



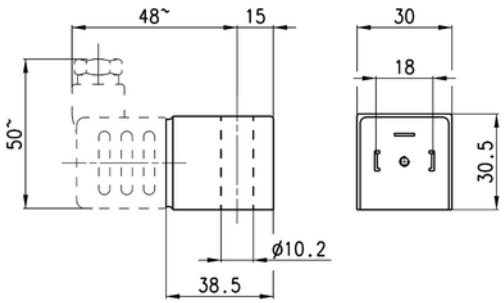

Electrical connection: bipolar plus earth
Norm: DIN EN 175 301-803-A

Mod.	Solenoid voltage	Power absorption
A8B	24V - 50/60Hz	5VA
A8D	110V - 50/60Hz	5VA
A8E	220V - 50/60Hz	5VA
A83	24V DC	4W

Products designed for industrial applications. General terms and conditions for sale are available on www.camozzi.com
This document contains a description of the products offered by Camozzi Automation at time of publication.
For more complete and up to date information about the Camozzi Automation product range, please refer to our online catalogue at https://shop.camozzi.com

Solenoids Mod. G8...



Electrical connection: bipolar plus earth
Norm: DIN EN 175 301-803-A

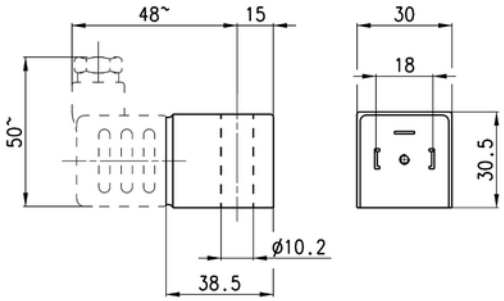

	Solenoid voltage	Power absorption
G83	24V DC	4W

Solenoids Mod. G93 (with latching)



Electrical connection: bipolar plus earth
Norm: DIN EN 175 301-803-B
Voltage tolerance: ± 10%
Pulsed operation (see description)

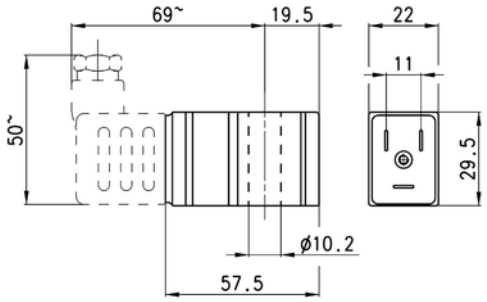

Mod.	Voltage	Minimum inpulse latch/release	Consumption latch/release
G92	12 V DC	18 ms - 10 ms	200 mA - 160 mA
G93	24 V DC	18 ms - 10 ms	100 mA - 80 mA

Solenoid Mod. H8... for potentially explosive ambients



Certification in compliance with EN 60079-0 EN 60079-18
ATEX:
II 2G Ex mb IIC T4 Gb
II 2D Ex mb IIIC T135°C Db
I M2 Ex mb I Mb
INERIS 06ATEX0002X

IECEx:
Ex mb IIC T4 Gb
Ex mb IIIC T135°C Db
Ex mb I Mb
IECEx INE 15.0053X

For Series NA use plate mod. NA54- PC.

Temperature class/Max surface temperature: T4/135°C.
Environment temperature: -20°C + 40°C.
Connection: tripolar cable 3 m (other lenghts on request).
Incapsulating material: self-extinguishing PA.

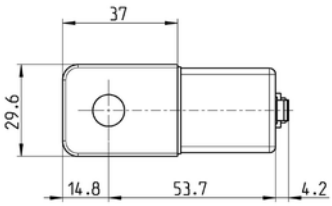

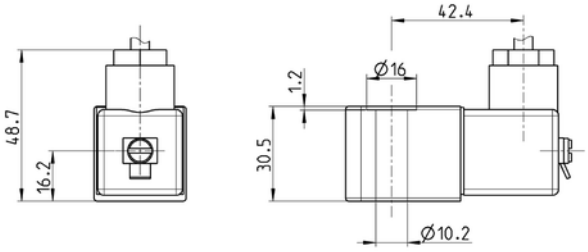

Mod.	Solenoid voltage	Power absorption
H83I	24 V - DC	5,3 W
H8BI	24 V - 50/60 Hz	5,3 W
H8CI	48 V - 50/60 Hz	5,3 W
H8DI	110 V - 50/60 Hz	5,3 W
H8EI	230 V - 50/60 Hz	5,3 W

Products designed for industrial applications. General terms and conditions for sale are available on www.camozzi.com
This document contains a description of the products offered by Camozzi Automation at time of publication.
For more complete and up to date information about the Camozzi Automation product range, please refer to our online catalogue at https://shop.camozzi.com

Solenoids Mod. U7... / U7*EX and Mod. G7...



Electrical connection: bipolar plus earth
Norm: DIN EN 175 301-803-B
Solenoid material: U7* = PET; G7* = PA
To order the ATEX version of Mod. U7 (not available for Mod. U7F, U7K1 with voltage 125V 50/60Hz) it is necessary to add EX at the end of the code.
Mod. U7*EX marked:
II 3G Ex nA IIC T4 Gc X IP65
II 3D Ex tc IIIC 130°C Dc X

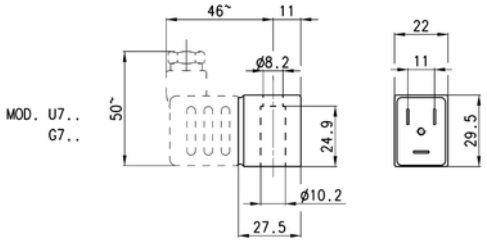

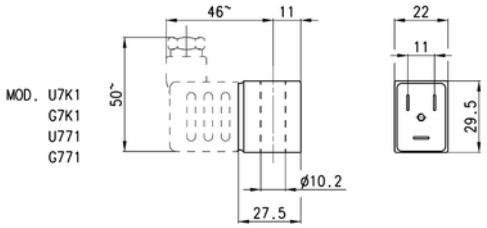

Mod.	Sol. volt. (1)	Pow. abs. (1)	Sol. volt. (2)	Pow. abs. (2)	Sol. volt. (3)	Pow. abs. (3)
U7H	12 V DC	3,1 W	24V - 50/60 Hz	3,5 VA		
G7H	12 V DC	3,1 W	24V - 50/60Hz	3,5 VA		
U7K	110V - 50/60Hz	3,8 VA	125V - 50/60Hz	5,5 VA	72 V DC	4,8 W
U7K1	110V - 50/60Hz	5,8 VA	125V - 50/60Hz	8,3 VA	72 V DC	5,6 W
G7K	110V - 50/60Hz	3,8 VA	125V - 50/60Hz	5,5 VA	72 V DC	4,8 W
G7K1	110V - 50/60Hz	5,8 VA	125V - 50/60Hz	8,3 VA	72 V DC	5,6 W
U7J	230V - 50/60Hz	3,5 VA	240V - 50/60Hz	4 VA		
G7J	230V - 50/60Hz	3,5 VA	240V - 50/60Hz	4 VA		
U79	48 V DC	3,1 W				
G79	48 V DC	3,1 W				
U710	110 V DC	3,2 W				
G710	110 V DC	3,2 W				
U77	24 V DC	3,1 W	48V - 50/60Hz	3,8 VA		
U771	24 V DC	3,1 W	48V - 50/60Hz	3,8 VA		
G77	24 V DC	3,1 W	48V - 50/60Hz	3,8 VA		
G771	24 V DC	3,1 W	48V - 50/60Hz	3,8 VA		
U7F	380V - 50/60Hz	7 VA				
U72	12 V DC	5 W				
G72	12 V DC	5 W				
U73	24 V DC	5 W				
G73	24 V DC	5 W				
U75	24 V DC	2,2 W				

Sol. volt. = Solenoid voltage
Pow. abs. = Power absorption
Mod. U7K1, G7K1, U771 and G771 are to be used only with sol. valves series A, NO in line.

Products designed for industrial applications. General terms and conditions for sale are available on www.camozzi.com
This document contains a description of the products offered by Camozzi Automation at time of publication.
For more complete and up to date information about the Camozzi Automation product range, please refer to our online catalogue at https://shop.camozzi.com