SCHAEFFLER

Spherical roller bearings 22212-E1-XL (Series 222..-E1)

main dimensions to DIN 635-2

The datasheet is only an overview of dimensions and basic load ratings of the selected product. Please always observe all the guidelines in these overview pages. Further information is given on many products under the menu item "Description". You can also order comprehensive information via the Catalogue selection system (https://www.schaeffler.de/content.schaeffler.de/en/news_media/index.jsp) or by telephone on +49 (91 32) 82 - 28 97.

d	60	mm
D	110	mm
B	28	mm
D_1	98,7	mm
d_2	71,6	mm
$D_{a\ max}$	101	mm
$d_{a\ min}$	69	mm
d_s	3,2	mm
n_s	6,5	mm
$r_{a\ max}$	1,5	mm
r_{min}	1,5	mm

m	1,12 kg	Mass
C_r	160000 N	Basic dynamic load rating, radial
C_{0r}	155000 N	Basic static load rating, radial
C_{ur}	20700 N	Fatigue limit load, radial
n_G	8100 1/min	Limiting speed
$n_{\vartheta r}$	4550 1/min	Reference speed
e	0,23	
Y_1	2,98	
Y_2	4,44	
Y_0	2,92	

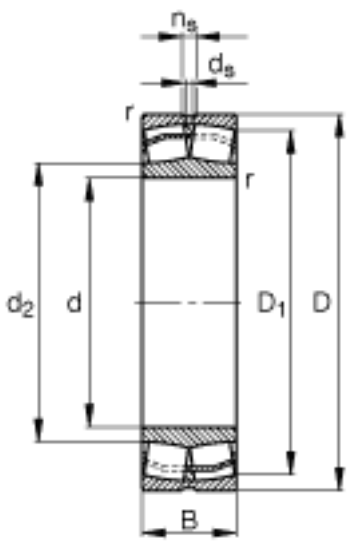
n_s
d_s
r
r
d_2
d
D_1
D
B

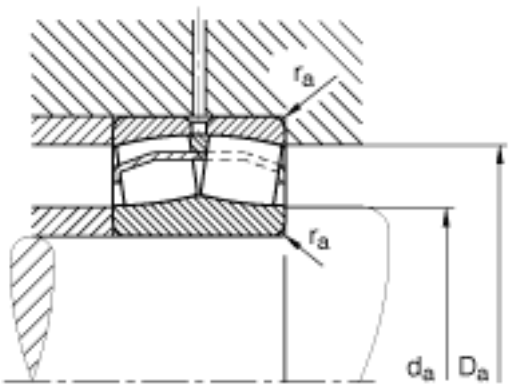
r_a
r_a
d_a
D_a