Brand of NTN corporation

Technical data

UKFL206H

Bearing units



Grey cast housing, radial insert ball bearing with adapter sleeve,seal with slinger

KIT CONTENT

UK206G2H, FL206

VISUAL (S)

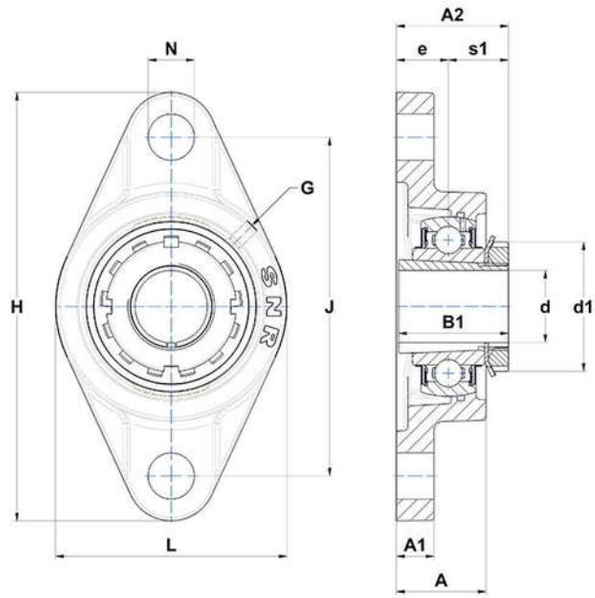

PRODUCT DEFINITION

Brand	SNR
A - Housing height	31 mm
A1 - Housing foot height / flange height	13 mm
A2 - Total height from mounting surface	38,5 mm
B - Width of Inner Ring	25 mm
B1 - Overall width Inner Ring	38 mm

PRODUCT DEFINITION	
d - Shaft diameter	25 mm
d1 - Outer dia of eccent. Lock. collar / nut of adapter sleeve	45 mm
e - Distance mounting surface to bearing center	18 mm
G - Grease fitting	M6x1
H - Housing length, width or diameter	148 mm
J - Mounting holes distance	117 mm
L - Housing width / diameter	80 mm
N - Mounting hole dimension	16 mm
s1 - Distance nut to middle of bearing raceway	20,5 mm

PRODUCT PERFORMANCE	
C - Dynamic load rating	19500000 mN
C0 - Static load rating	11200000 mN
Operating temperature min.	253,15 °K
Operating temperature max.	373,15 °K

OTHER FEATURES	
Mass	0,94 kg
Adapter sleeve designation	H2306