Brand of NTN corporation

Technical data

ESEHE209

Bearing units



Grey cast housing, radial insert ball bearing with eccentric locking collar, single lip seal

KIT CONTENT

ES209G2, EHE209

VISUAL (S)

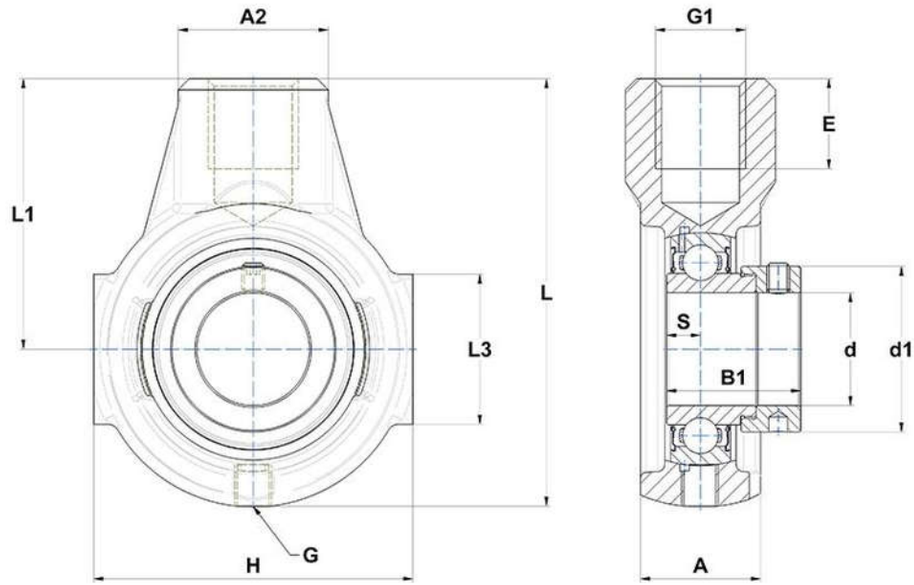

PRODUCT DEFINITION

Brand	SNR
A - Housing width	40 mm
A2	40 mm
B1 - Overall width Inner Ring	43,7 mm
d - Shaft diameter	45 mm
d1 - Outer dia of eccent. Lock. collar / nut of adapter sleeve	62 mm

NTN Europe
1 rue des Usines · BP 2017 · 74010 Annecy Cedex · France · Tel. +33 (0)4 50 65 30 00
S.A. au capital de 322 639 919 € · RCS ANNECY B 325 821 072 · Id. Fiscale : FR 48 325 821 072
SIRET 325 821 072 00015 · Code APE 2815 Z · Code NACE 28.15

PRODUCT DEFINITION	
E - Mounting hole thread depth	24 mm
G - Grease fitting	R1/8"
G1 - Thread size	M24
H - Housing length, width or diameter	110 mm
L - Housing length	145 mm
L1 - Distance attachment end face to bearing centerline	90 mm
L3 - Length of guidance slot/face	45 mm
S - Distance front side/bearing centre	11 mm

PRODUCT PERFORMANCE	
C - Dynamic load rating	31850000 mN
C0 - Static load rating	20800000 mN
Operating temperature min.	253,15 °K
Operating temperature max.	373,15 °K

OTHER FEATURES	
Mass	1,89 kg
Recommended tightening torque for set screw	11.5 N-m