E33250

T-piece

T-ADAPT G1 DN25

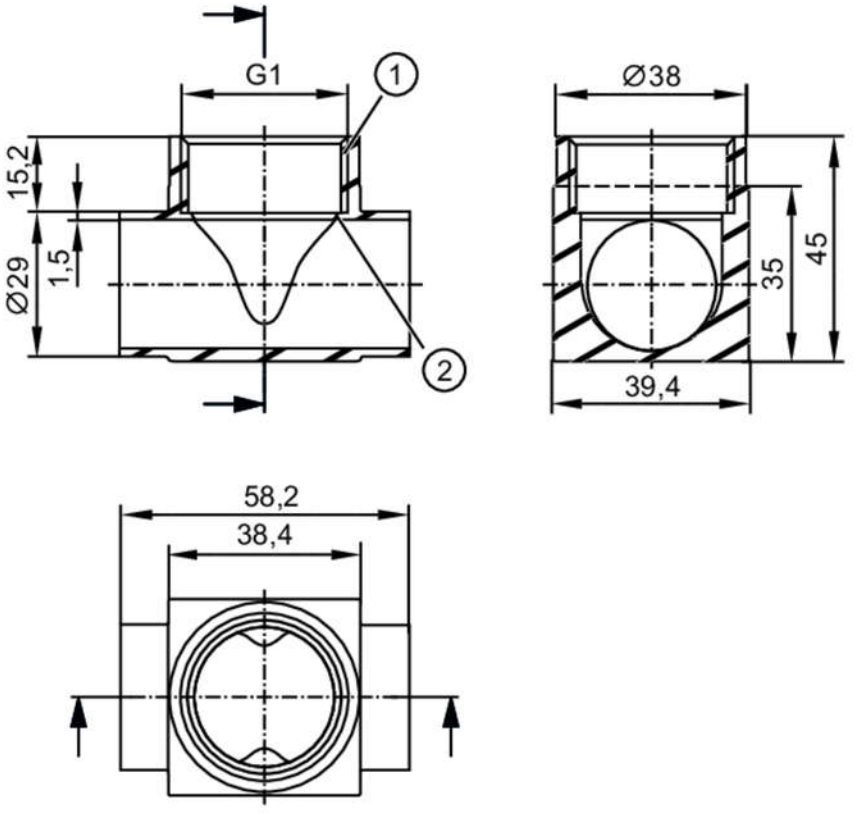

1 Aseptoflex Vario
2 sealing area

EC 1935/2004 FDA

Application		
Pressure rating	[bar]	25
Note on pressure rating		for the connection sensor - adapter
Tests / approvals		
Pressure Equipment Directive		A possible classification to PED depends on the application and has to be carried out by the user / operator.
Pressure Equipment Directive EAC		The adapter is intended for use in devices, machines and installations that do not fall under the categories of the technical rule TR CU 032/2013.
Safety instructions		The compatibility between medium and product material has to be checked in all applications.
Mechanical data		
Weight	[g]	305.5
Materials (wetted parts)		stainless steel (1.4404 / 316L) ; surface characteristics : Ra<0,8 / Rz 4
Sensor connection		G 1 Aseptoflex Vario
Process connection		welding adapter Ø 29 mm
Sealing		Gasket
Accessories		
Items supplied		O-ring: 1 x 24 x 2, EPDM, FDA compliant, E30054
Accessories (optional)		O-ring: 1 x 24 x 2, FKM, FDA compliant, E30123

E33250

T-piece

T-ADAPT G1 DN25

Remarks	
Pack quantity	1 pcs.