AV series

Anti-vandal and security pushbutton switches

Distinctive features

- ❑ **Attractive, robust and durable**
  - **Irremovable**
  - **Anti-jamming construction : reduced travel to prevent insertion of foreign parts**
  - **Contact and mechanism protected against crushing**
  - **Fire resistant**
  - **Long life**
- ❑ **Different bushing sizes and actuator shapes**
- ❑ **Sealed versions**
- ❑ **Degree of protection of sealed versions (switches mounted on vertical panels) : IP65 to IP67 or IP69K depending on models**
- ❑ **UL/CSA approved models**

UG1410A

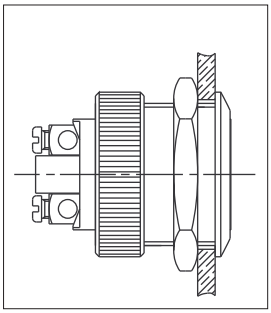

B2

The AV series is a large range of very robust pushbutton switches, consisting of 2 families :

ANTI-VANDAL PUSHBUTTON SWITCHES (pages 77-79)

- **Great robustness (impact resistance IK08 (Ø 19 mm) and IK10 (Ø 22 mm)**
- **Actuator and bushing : stainless steel**
- **Bushing Ø 19 mm (.748) or 22 mm (.866**

SECURITY PUSHBUTTON SWITCHES (pages 80-106)

- **Large variety of models**
- **Actuator and bushing : nickel plated, chrome plated or polished varnished brass, stainless steel**
- **Bushing diameter 16 mm (.629), 19 mm (.748), 22 mm (.866) or 24 mm (.944)**
- **Marking, illumination, tactile feedback**
- **Numerous electrical functions (momentary or maintained)**

EXAMPLES OF MOUNTING FOR SEALED VERSIONS → Gasket

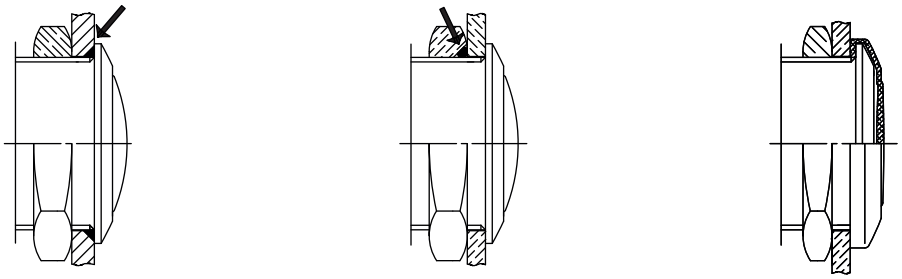

Preferred | For thin panels | With boot U2187 (sect. H)

Dimensions : first dimensions are in mm while inches are shown as bracketed numbers.

Packaging unit : specified on the following pages.

Mounting accessories : Standard and special hardware are presented in section I.

Sealing boots are available for models with Ø 19 mm (.748) bushing. See Section H.

The company reserves the right to change specifications without notice.

- **Very robust**
  Impact resistance IK08 for model Ø 19 mm (.748)
  and IK10 for model Ø 22 mm (.866)
- **Stainless steel actuator and bushing**
- **UL-CSA approved (long case only)**

SPECIFICATIONS

- Max. current/voltage rating with resistive load :
  - A contacts : 4A 12VDC, 500.000 cycles
  - C contacts : 2A 48 VDC, 10.000 cycles
- Initial contact resistance : 10 mΩ max.
- Insulation resistance : 1.000 MΩ min. at 500VDC
- Dielectric strength : 2.000 Vrms 50 Hz min. between terminals and frame
  2.000 Vrms 50 Hz min. between terminals
- Torque : 5 Nm min.- 14 Nm max. applied to nut
- Panel thickness : 1 (.039) to 11 mm (.433) max.
- Operating temperature : -30°C to +70°C
- Low level or mechanical life : 1.000.000 cycles
- Hand soldering : 300°C, 3 sec. max.
- Packaging unit : 20 pieces (models Ø 22) or 40 pieces (models Ø 19)

MATERIALS

- Case : PBT
- Contacts : silver (A)
  or brass, silver plated (C)
- Bushing : stainless steel
- Actuator : stainless steel

CUT-OUT

- Panel cut-out :
  Ø 19,2 mm (.755)
  or Ø 22,2 mm (.874)
- Min. pitch for matrix mounting :
  30 mm x 30 mm (1.181x1.181)

ROBUSTNESS

	Model Ø 19 mm (.748)		Model Ø 22 mm (.866)	
Degree of protection according to EN 50102, June 95 (NFC 20-015)	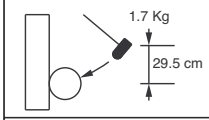 Hammer radius 25 mm	**IK08** Striking energy: 5 joules (5Nm)	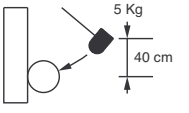 Hammer radius 50 mm	**IK10** Striking energy: 20 joules (20Nm)

Increased impact resistance provided by a nut or mechanical stop.

SEALING (OPTION T)

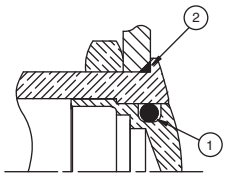

Front panel sealing (IP65)

① internal gasket ② external gasket

Option N does not include ① nor ②.

AV series

Anti-vandal pushbutton switches Ø 19 mm (.748)

Momentary (NO)

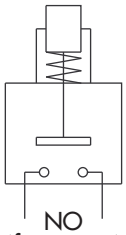

NO
(function 3)

ORDER FORMAT

AV			3			40	
SERIES	Actuator type	Case	Function	Contacts	Terminals	Bush./act. material	Sealing
	09 Flat 19 Curved 9D Flush	000 Long 100 Short	3 NO	A Silver C Brass, silver pl.	9 Screw 2 Quick-connect	40 Stainless steel	N No T Sealed

In the following model numbers, replace • with elements selected in the above order format.

Flat actuator - short case - 48VDC - AV09100

Hex nut 22 (.866) across flats



Screw terminals
AV091003•940•



Solder lug /
quick-connect term.
AV091003•240•



Screw terminals for wires 1,5 mm² max.

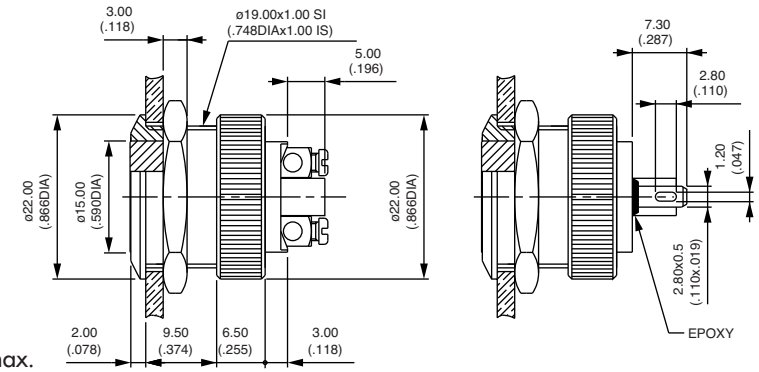

Flat actuator - long case - 4A 250VAC/8A125VAC - UL/CSA - AV09000

Hex nut 22 (.866) across flats



Screw terminals
AV090003A940•



To order switches **marked UL-CSA**, add
"**UU**"at the end of model number.

Screw terminals for wires 1,5 mm² max.

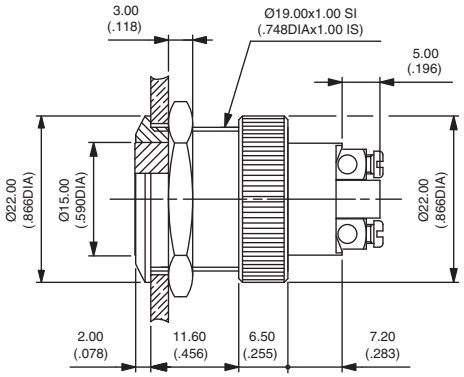

Curved actuator - AV19

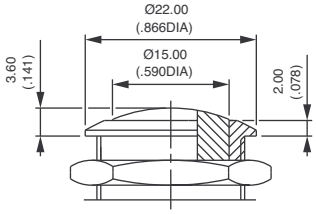

Screw terminals
AV19•003•940•
Solder lug/quick-connect term. (short case)
AV191003•240•

Flush model - AV9D

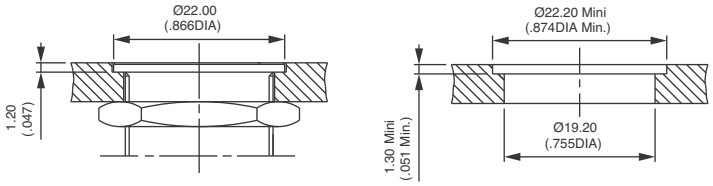

Screw terminals
AV9D•003•940•
Solder lug / quick-connect terminals (short case only)
AV9D1003•240•

Panel cut-out

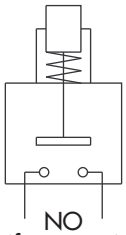

NO
(function 3)

ORDER FORMAT

AV			3			40	
SERIES	Bushing/act. configuration	Case	Function	Contacts	Terminals	Bush./act. material	Sealing
	03 Flat act. **02** Curved act. **M3** Flat act + flatted bush. **M2** Curved act.+ flatted bush.	**000** Long **100** Short	**3** NO	**A** Silver **C** Brass, silver pl.	**9** Screw **2** Quick-connect	**40** Stainless steel	**N** No **T** Sealed

In the following model numbers, replace • with elements selected in the above order format.

B2

Flat actuator - short case - 48VDC - AV03100

Hex nut 25 (.984) across flats



Screw terminals
AV031003•940•



Solder lug /
quick-connect term.
AV031003•240•



Screw terminals for wires 1,5 mm² max.

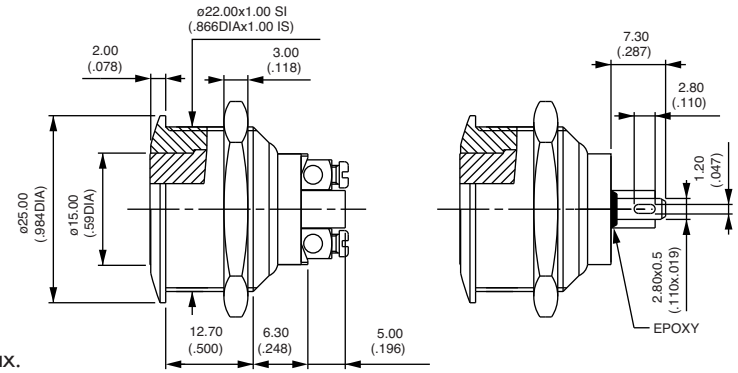

Flat actuator - long case - 4A 250VAC/8A125VAC - UL/CSA - AV03000

Hex nut 25 (.984) across flats



Screw terminals
AV030003A940•



To order switches **marked UL-CSA**, add "**UU**" at the end of model number.

Screw terminals for wires 1,5 mm² max.

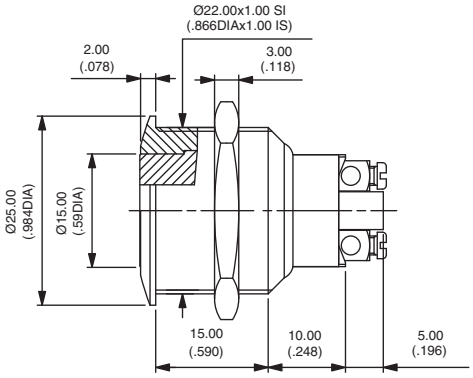

Curved actuator - AV02

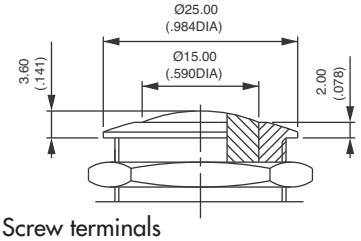

Screw terminals
AV02•003•940•
Solder lug / quick-connect (short case)
AV021003•240•

Flatted bushing - AVM3 and AVM2

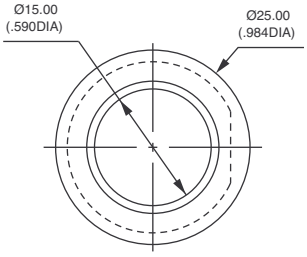

Flat actuator, screw terminals
AVM3•003•940•

Curved actuator, screw terminals
AVM2•003•940•

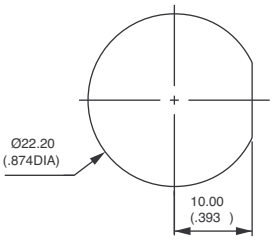

Panel cut-out

AV series

Snap action security pushbutton switches Ø 16 mm (.629)

Momentary (NO)

MODEL STRUCTURE

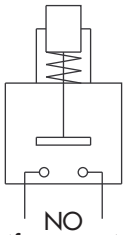

NO
(function 3)

ORDER FORMAT

AV		3	0	C	9	OPTIONS

SERIES

Bushing/act. configur.
- **06** Flat actuator
- **16** Curved actuator
- **08** Curved act.+chamfer
- **07** Flat act.+chamfer
- **6P** Flat act.+knurled nut
- **6B** Curved act.+knurled nut

Function
- **3** NO

Case
- **0** Short

Contacts
- **C** Brass, silver pl.

Terminals
- **9** Screw

See "Options" page.

SPECIFICATIONS

- **Travel : 1,60 mm** (.063) ± 0,3 mm (.011)
- Max. current/voltage rating with resistive load : 200mA 48 VDC - 100mA 48VDC
- Initial contact resistance : 50 mΩ max.
- Insulation resistance : 1.000 MΩ min. at 500VDC
- Dielectric strength : 2.000 Vrms 50 Hz min. between terminals and frame
- Electrical life : 50.000 cycles at 200mA 48VDC 100.000 cycles at 100mA 48VDC
- Torque : 5 Nm min.- 14 Nm max. applied to nut
- Panel thickness : 1 (.039) to 6 mm (.236) max.
- Operating temperature : -30°C to +70°C
- Low level or mechanical life : 1.000.000 cycles
- Packaging unit : 60 pieces

MATERIALS

- Case : PBT
- Contacts : brass, silver plated (C)
- Bushing and actuator : see "Options" page

CUT-OUT

- Panel cut-out : Ø 16,2 mm (.637)
- Min. pitch for matrix mounting : 24 mm x 24 mm (.944 x .944) (AV6P & AV6B : 20 mm x 20 mm)

To order a product, select a basic model below and add the desired options.

BASIC MODEL

Flat or curved actuator - screw terminals

Hex nut 19 (.748) across flats



Flat actuator
AV0630C9

Curved actuator
AV1630C9

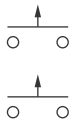

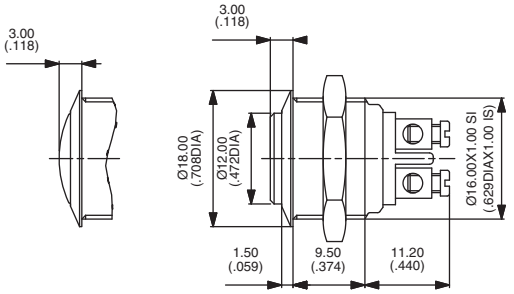

Screw terminals for wires 1,5 mm² max.

With chamfer

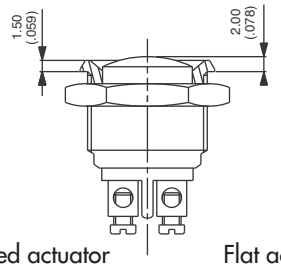

Curved actuator
AV0830C9

Flat actuator
AV0730C9

With knurled nut for matrix mounting 20 x 20 - AV6P and AV6B

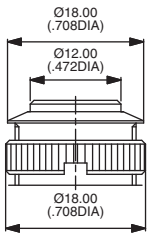

Flat actuator
AV6P30C9

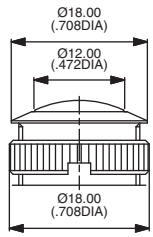

Curved actuator
AV6B30C9

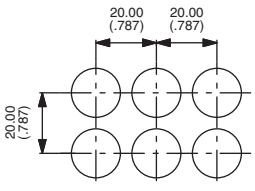

Wrench available under P/N **U1990.**

MODEL STRUCTURE

AV series

Security pushbutton switches Ø 16 mm (.629)

Latching action

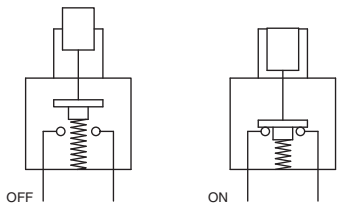

ORDER FORMAT

AV		1	1	A		OPTIONS
SERIES	Actuator 06 Flat 16 Curved	Function 1 Off-On	Case 1 Long	Contacts A Silver	Terminals 2 Solder 4 PC 8 Quick-connect	

See "Options" page.

SPECIFICATIONS

- Max. current/voltage rating with resistive load : 1A 24VDC
- Initial contact resistance : 50mΩ max.
- Insulation resistance : 1 GΩ min. at 500VDC
- Dielectric strength : 1.500 Vrms 50 Hz min. between terminals
  1 000 Vrms 50 Hz between terminals and frame
- Electrical life : 40.000 cycles
- Torque : 5 Nm min. - 14 Nm max. applied to nut
- Panel thickness : 1 (.039) to 6 mm (.236) max.
- Operating temperature : -30°C to +70°C
- Low level or mechanical life : 200.000 cycles
- Hand soldering : 300°C, 5 sec. max.
- Packaging unit : 25 pieces

MATERIALS

- Case : PA-6T, UL94-V0
- Contacts : silver (A)
  Gold plated silver (AD) on request
- Bushing and actuator : see "Options" page

CUT-OUT

- Panel cut-out : Ø 16,2 mm (.637)
- Min. pitch for matrix mounting :
  24 mm x 24 mm (.944 x .944)

To order a product, select a basic model below and add the desired options.

BASIC MODEL

Flat or curved actuator - solder lug terminals

Hex nut 19 (.748) across flats



Flat actuator
AV0611A2 OFF - ON

Curved actuator
AV1611A2 OFF - ON

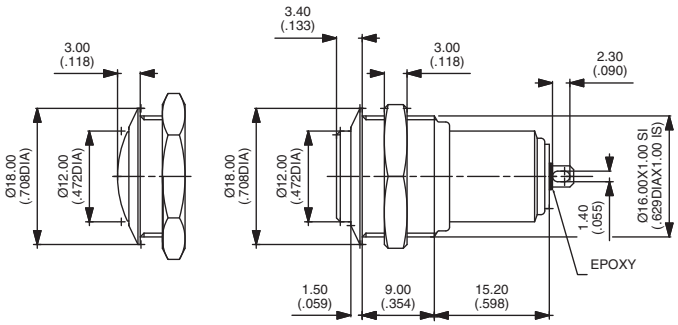

Straight PC terminals

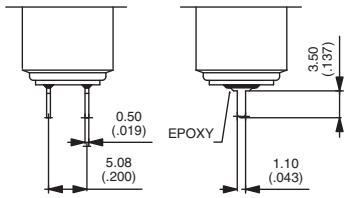

Flat actuator
AV0611A4

Curved actuator
AV1611A4

Quick-connect terminals

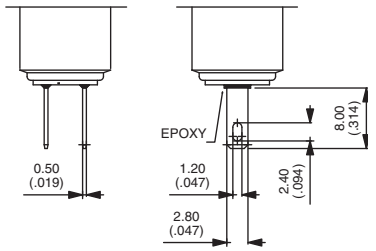

Flat actuator
AV0611A8

Curved actuator
AV1611A8

AV series

Security pushbutton switches Ø 16 mm (.629)

Options

OPTIONS

After selecting basic model number, fill in last 2 boxes with desired options.

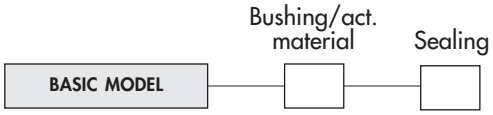

BUSHING/ACTUATOR MATERIALS

Flat or curved metal actuator

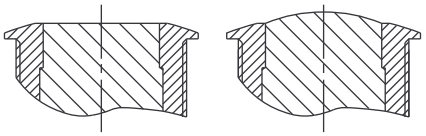

CODE	BUSHING	ACTUATOR
00 (standard)	**Nickel plated brass**	**Nickel plated brass**
10	Nickel plated brass	Stainless steel
40	Stainless steel	Stainless steel

B2

SEALING

Blank No sealing

K Front panel sealing (IP65)

MODEL STRUCTURE

AV series

Security pushbutton switches Ø 19 mm (.748)

Momentary (NO)

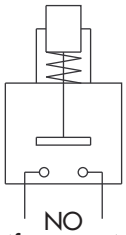

NO
(function 3)

ORDER FORMAT

AV			3			OPTIONS
SERIES	Bushing/act. config.	Case	Function	Contacts	Terminals	See "Options" page.
	09 Flat actuator **19** Curved actuator **9P** Flat act., knurled nut **9B** Curved act., knurled nut	**000** Long **100** Short	**3** NO	**A** Silver **C** Brass silver pl.	**9** Screw **2** Quick-connect	

SPECIFICATIONS

- Max. current/voltage rating with resistive load :
  - A contacts : 4A 12VDC, 500.000 cycles
  - C contacts : 2A 48 VDC, 10.000 cycles
- Approved ratings of models with long case and A contacts (AV..000) : UL-CSA : 4A 250VAC - 8A 125VAC - 6.000 cycles
- Initial contact resistance : 10 mΩ max.
- Insulation resistance : 1.000 MΩ min. at 500VDC
- Dielectric strength : 2.000 Vrms 50 Hz min. between terminals and frame 2.000 Vrms 50 Hz min. between terminals
- Torque : 5 Nm min.- 14 Nm max. applied to nut
- Panel thickness : 1 (.039) to 11 mm (.433) max.
- Operating temperature : -30°C to +70°C
- Low level or mechanical life : 1.000.000 cycles
- Hand soldering : 300°C, 3 sec. max.
- Packaging unit : 40 pieces

MATERIALS

- Case : PBT
- Contacts : silver (A) or brass, silver plated (C)
- Bushing and actuator : see "Options" page

CUT-OUT

- Panel cut-out : Ø 19,2 mm (.755)
- Min. pitch for matrix mounting : 30 mm x 30 mm (1.181x1.181) (AV9P & AV9B : 25 mm x 25 mm)

B2

To order a product, select a basic model below and add the desired options.

BASIC MODEL

Flat actuator - short case - 48VDC - AV09100

Hex nut 22 (.866) across flats



Screw terminals
AV091003•9



Solder lug / quick-connect term.
AV091003•2



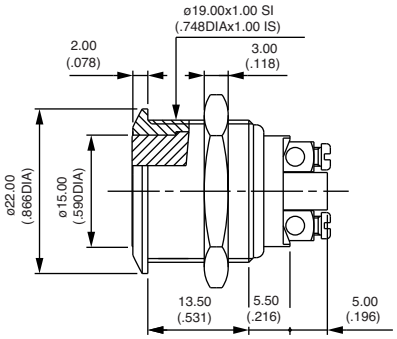

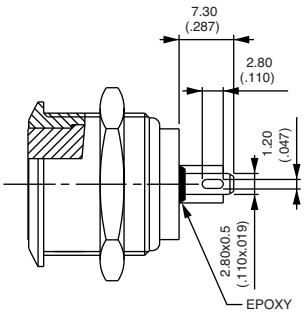

Screw terminals for wires 1,5 mm² max.

Contacts : remplace • with A (silver) or C (silver plated brass).

Curved actuator - short case

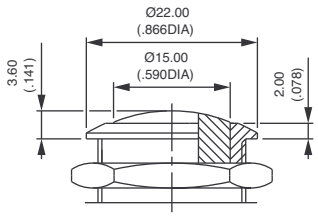

Screw terminals
AV191003•9
Solder lug / quick-connect terminals
AV191003•2

With knurled nut for matrix mounting 25 x 25 - AV9P and AV9B

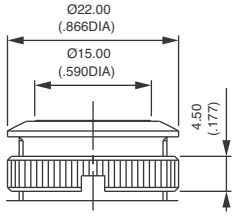

Flat actuator, screw terminals
AV9P1003•9
Flat actuator, solder lug term.
AV9P1003•2

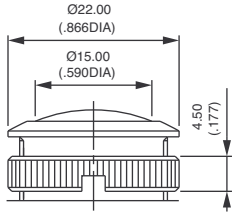

Curved actuator, screw terminals
AV9B1003•9
Curved actuator, solder lug term.
AV9B1003•2

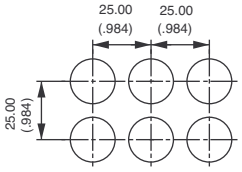

Wrench available under P/N **U1929**

AV series

Security pushbutton switches Ø 19 mm (.748)

Momentary (NO)

MODEL STRUCTURE

Flat actuator - long case - 4A 250VAC/8A 125VAC - UL/CSA - AV09000

Hex nut 22 (.866) across flats



Screw terminals
AV090003A9



To order switches **marked UL-CSA**, add "**UU**" at the end of model number.

Screw terminals for wires 1,5 mm² max.

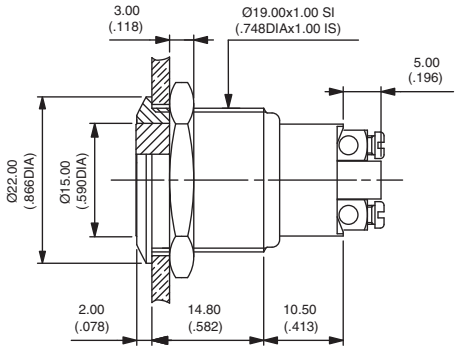

B2

Curved actuator - long case

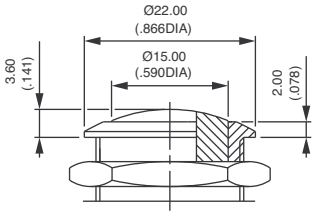

Screw terminals
AV190003A9

With knurled nut for matrix mounting 25 x 25 - AV9P and AV9B

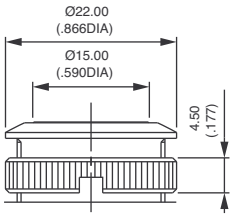

Flat actuator, screw terminals
AV9P0003A9

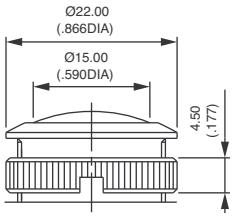

Curved actuator, screw terminals
AV9B0003A9

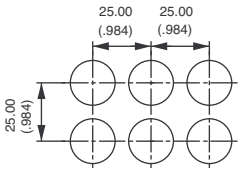

Wrench available under P/N **U1929**.

AV series

Security pushbutton switches Ø 19 mm (.748)

Options

After selecting basic model number, fill in last 3 boxes with desired options.

BASIC MODEL	Bush./actuator material	Marking	Sealing
	☐	☐	☐

BUSHING/ACTUATOR MATERIALS

Flat or curved metal actuator

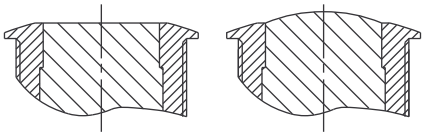

CODE	BUSHING	ACTUATOR
00 (standard)	**Nickel plated brass**	**Nickel plated brass**
10	Nickel plated brass	Stainless steel
12	Nickel plated brass	Chrome plated brass
20	Chrome plated brass	Chrome plated brass
30	Chrome plated brass	Stainless steel
40	Stainless steel	Stainless steel
80	Varnished polished brass	Varnished polished brass

Flat thermoplastic actuator

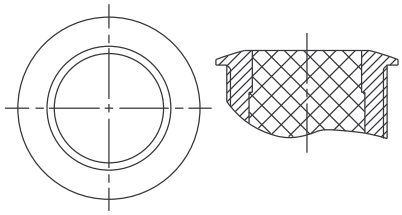

CODE	BUSHING	ACTUATOR COLOUR
0• (standard)	**Nickel plated brass**	Replace • with one of the following codes.
2•	Chrome plated brass	**1** : blue - **1/4** : dark blue - **2** : black - **3** : green
8•	Varnished polished brass	**4** : grey - **5** : yellow - **6** : red - **7/1**: white
		9 : orange

MARKING

Select an option from each of the two tables below.

- By engraving on flat or curved brass actuator (stainless steel on request)
- by hot stamping on flat thermoplastic actuator

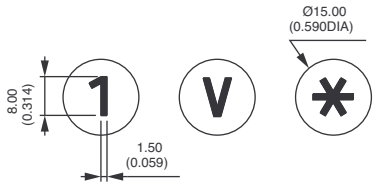

TYPE OF MARKING

CODE	TYPE
0 to 9	Numbers 0 to 9
X	Symbol *
Y	Symbol #
A to N	Letters A to N
P to W	Letters P to W
0	Letter O

Letter O : same code and same design as number 0.

For special symbols, consult factory. Minimum order : 500 pieces

COLOUR OF MARKING

CODE	COLOUR
Brass actuator	
0 (standard)	Same as finish
2	Black

Note : a finished product supplied in version "0" cannot be modified to version "2".

Thermoplastic actuator	
2	Black
7	White

SEALING

Blank No sealing

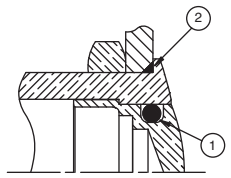

K Frontal panel sealing (IP65)

① internal gasket
② external gasket

AV series

Security pushbutton switches Ø 19 mm (.748)

Momentary (NC/NO)

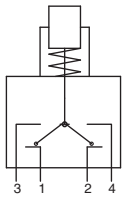

Combined NC/NO

ORDER FORMAT

Series	Bushing diameter	Bush./act. config.	Actuator style	Bush./act. matl	Contact/ terminals
AV	19	L	P B	40	7
				See below	

SPECIFICATIONS

- Max. current/voltage rating with resistive load :
  5A 250VAC - 5A 125VAC - 6.000 cycles
  5A 15VDC - 3A 30VDC - 50.000 cycles
- Initial contact resistance : 100 mΩ max.
- Insulation resistance : 1.000 MΩ min. at 500VDC
- Dielectric strength : 2.000 Vrms 50 Hz min. between term. and frame
- Torque : 5 Nm min.- 14 Nm max. applied to nut
- Panel thickness : 1 (.039) to 9 mm (.354) max.
- Operating temperature : -20°C to +85°C
- Low level or mechanical life : 1.000.000 cycles
- Front panel sealing : IP65 and IP69K
- Packaging unit : 20 pieces

MATERIALS

- Case : PA 6/6
- Contacts : silver
- Bushing : stainless steel (std)
- Actuator : stainless steel (std)

CUT-OUT

- Panel cut-out : Ø 19,2 mm (.755)
- Min. pitch for matrix mounting :
  30 mm x 30 mm (1.181x1.181)

All model numbers below are for switches with standard bushing/actuator material.

BASIC MODEL

Solder lug terminals - AV19..407



Flat actuator
AV19LP407

Curved actuator
AV19LB407

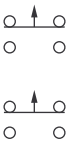

→ O-ring

Hex nut 22 (.866) across flats

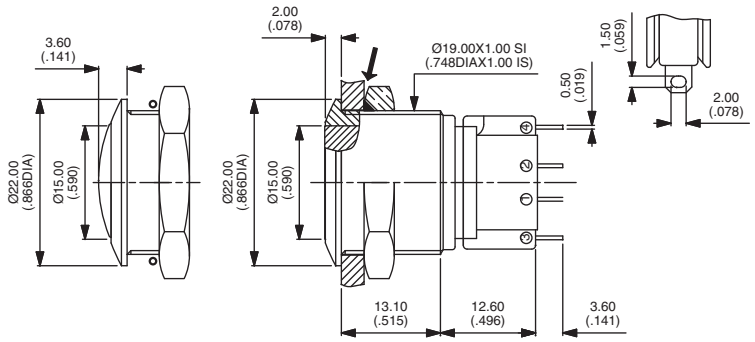

BUSHING/ACTUATOR MATERIALS

For non-standard material, replace **40** with one of the following codes.

CODE	BUSHING	ACTUATOR
00	Nickel plated brass	Nickel plated brass
20	Chrome plated brass	Chrome plated brass

MODEL STRUCTURE

AV series

Security pushbutton switches Ø 19 mm (.748)

With illuminated ring - momentary (NC/NO)

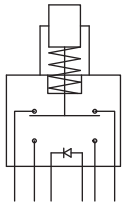

NC/NO

ORDER FORMAT

Options : see next page.

AV	9			2	
SERIES	Bushing dia. 19 mm	LED colour	LED resistor	Contacts	Terminals

LED colour
0 : no LED - **1** : blue - **V** : green
5 : yellow - **6** : red - **7** : white - **9** : amber

LED resistor
0 No resistor supplied
1 12VDC resistor
2 24VDC resistor
4 48VDC resistor

Contacts
2 Silver

Terminals
2 Solder / quick-connect
F Flying leads
C Cable

SPECIFICATIONS

- Travel : 2 mm ± 0,3 mm (.003)
- Max. current/voltage rating with resistive load : 1A 30VDC
- LED voltage : 12VDC, 24VDC or 48VDC
  (If not supplied by APEM, a resistor must be series-connected by the user)**
- Initial contact resistance : 100 mΩ max.
- Insulation resistance : 10 MΩ min. at 500VDC
- Dielectric strength : 500 Vrms 50 Hz min. between terminals
  1.000 Vrms 50 Hz min. between terminals and frame
- Electrical life : 250.000 cycles at full load
- Operating force : 5N ± 2N
- Torque : 5 Nm min.- 14 Nm max. applied to nut
- Panel thickness : 1 (.039) to 6 mm (.236) max.
- Low level or mechanical life : 1.000.000 cycles
- Operating temperature : -30°C to +85°C
- Hand soldering : 350°C, 5 seconds max.
- Packaging unit : flying lead/cable models : 1 piece - other models : 40 pieces

** Resistor value = $\frac{\text{supply voltage - LED forward voltage}}{\text{LED forward current}}$

MATERIALS

- Case : polyamide, glass filled
- Contacts : silver
- Bushing : see next page
- Actuator : see next page
- Elastomeric membrane : silicone
- LED

CUT-OUT

- Panel cut-out : Ø 19,2 mm (.755)
- Min. pitch for matrix mounting :
  30 mm x 30 mm (1.181x1.181)

To order a product, select a basic model below and add the desired LED colour and voltage. Then select the desired options on next page.

B2

Flat actuator - solder lug terminals

Hex nut 22 (.866) across flats



Illuminated (select LED colour above) *
AV9•022 ON - MOM

Non-illuminated
AV90022 ON - MOM

*** No LED resistor supplied on this model.**

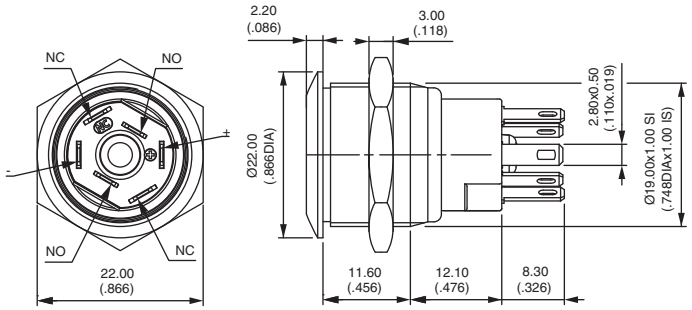

Flat actuator - flying lead terminals

Hex nut 22 (.866) across flats



Illuminated (select LED colour & resistor above)
AV9••2F ON - MOM

Non-illuminated
AV9002F ON - MOM

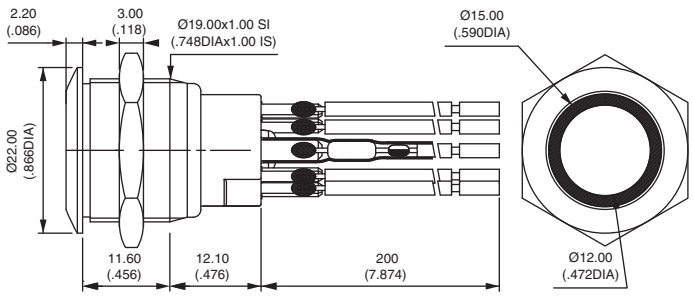

Wire colours : black: NC, orange: NO, red: LED anode (+), blue : LED cathode (-)

AV series

Security pushbutton switches Ø 19 mm (.748)

With illuminated ring - momentary (NC/NO)

OPTIONS

Flat actuator - cable terminals

Hex nut 22 (.866) across flats



Illuminated (select colour & resistor)
AV9••2C ON - MOM

Non-illuminated
AV9002C ON - MOM

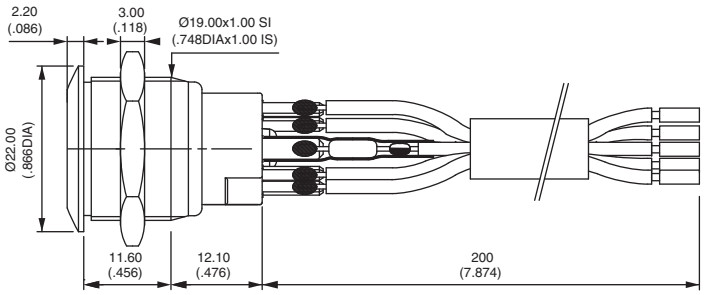

After selecting basic model No., fill in last 5 boxes with desired options.

BASIC MODEL	Flying lead protection	Flying lead/ cable length	Ring colour	Bushing / plunger mat.	Sealing

FLYING LEAD PROTECTION

0	No protection and/or no flying leads
1	Heat-shrink sleeves
2	Tube + epoxy

FLYING LEAD/CABLE LENGTH

000	No flying leads / no cable
020	Length 20 cm (standard)
XXX	Length in centimeters

RING COLOURS

CODE	COLOUR	CODE	COLOUR
1	Blue	**6**	Red
2	Black *	**7**	Opal white (std)
3	Green	**8**	Translucent
4	Grey *	**9**	Orange
5	Yellow		

* non-illuminated only

BUSHING/PLUNGER MATERIALS

CODE	BUSHING	ACTUATOR
00	Nickel plated brass	Nickel plated brass
40	Stainless steel 303	Stainless steel 303
4A	Stainless steel 304	Stainless steel 304
4B	Stainless steel 316	Stainless steel 316
70	Chrome pl. brass, black	Chrome pl. brass, black

Other : on request.

SEALING

Blank No sealing



K Front panel sealing (IP67)

① internal membrane
② external gasket

AV series

Security pushbutton switches Ø 19 mm (.748)

Illuminated and non-illuminated - latching

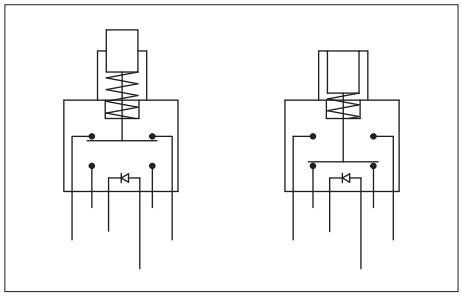

ORDER FORMAT

AV		1			E	A		OPTIONS
SERISE	Actuator type 09 Flat 19 Curved	Bush./act. config.	Illumin. 0 No L Illum.	LED colour 0 No LED 1 Blue 3 Green 5 Yellow 6 Red	Function	Contacts	Terminals 2 Solder 4 PC 8 Quick-connect	

See next page.

SPECIFICATIONS

- Max. current/voltage rating with resistive load : 2A 48 VDC
- LED voltage and consumption : blue 3,5V 10mA, green : 2V 10mA yellow & red : 2V 20mA (a resistor must be series-connected by the user)**
- Initial contact resistance : 50 mΩ max.
- Insulation resistance : 1.000 MΩ min. at 500VDC
- Dielectric strength : 1 000 Vrms 50 Hz min. between terminals 500 Vrms 50 Hz min. between terminals and frame
- Electrical life : 500.000 cycles at 2A 48VDC
- Torque : 5 Nm min.- 14 Nm max. applied to nut
- Panel thickness : 1 (.039) to 9 mm (.354) max.
- Operating temperature : -30°C to +70°C
- Low level or mechanical life : 1.000.000 cycles
- Hand soldering : 300°C, 4 seconds max.
- Packaging unit : 20 pieces

** Resistor value = $\frac{\text{supply voltage - LED forward voltage}}{\text{LED forward current}}$

MATERIALS

- Case : PA6T UL94-V0
- Contacts : silver
- Bushing and actuator : see next page
- LED

CUT-OUT

- Panel cut-out : Ø 19,2 mm (.755)
- Min. pitch for matrix mounting : 30 mm x 30 mm (1.181 x 1.181)

To order a product, select a basic model below and add the desired options selected on next page.

Standard actuator position : the actuator is flush in the non-latched position and recessed in the latched position.

Non-illuminated - solder lug terminals

Hex nut 22 (.866) across flats



Flat actuator *
AV09100EA2 ON - ON

Curved actuator
AV19100EA2 ON - ON

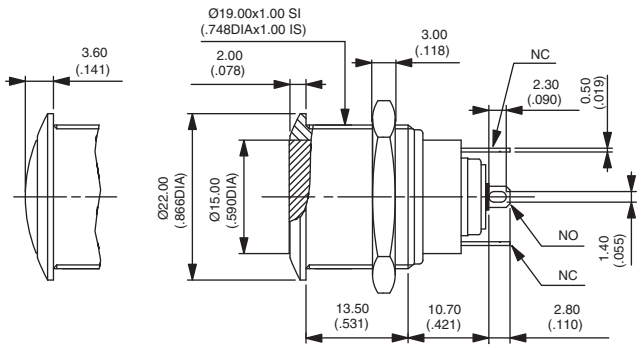

* Also available with prominent actuator in the non-latched position

Illuminated - solder lug terminals

Hex nut 22 (.866) across flats



Flat actuator
AV091L•EA2 ON - ON

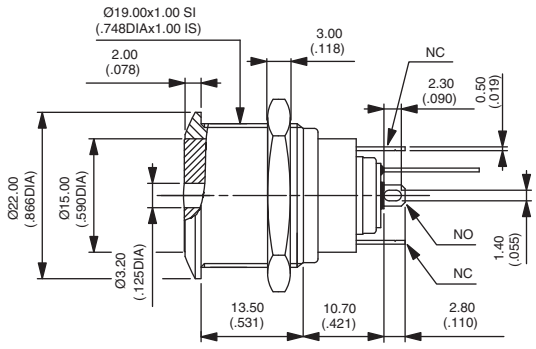

Replace • with desired LED colour.

AV series

Security pushbutton switches Ø 19 mm (.748)

Latching - Options

Straight PC terminals

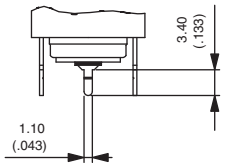

Replace 2 with **4** at the end of the model numbers shown on previous page.

Quick-connect terminals

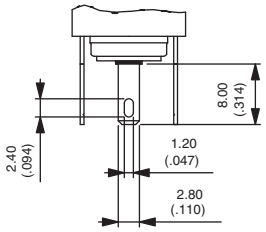

Replace 2 with **8** at the end of the model numbers shown on previous page.

B2

After selecting basic model number, fill in last 2 boxes with desired options.

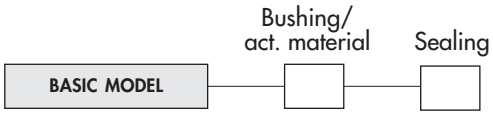

BUSHING/ACTUATOR MATERIALS

CODE	BUSHING	ATUATOR
00 (std)	**Nickel plated brass**	**Nickel plated brass**
10	Nickel plated brass	Stainless steel
40	Stainless steel	Stainless steel
50	Stainless steel	Nickel plated brass

SEALING

Blank No sealing

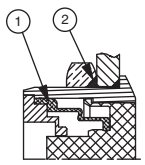

K Frontal panel sealing (IP65)

① elastomeric membrane
② external gasket

MODEL STRUCTURE

AV series

Tactile security pushbutton switches Ø 19 mm (.748)

Illuminated and non-illuminated - momentary (NO)

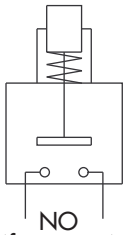

NO
(function 3)

ORDER FORMAT

AV		C7		3	D		OPTIONS
SERIES	Actuator type 09 Flat 19 Curved	Case	Illumin. 0 No L Illum.	Function	Contact	Terminals 2 Solder 9 Screw	

See next page

SPECIFICATIONS

- **Travel : 0,7 mm** (.027) ±0,1 mm (.003)
- Max. current/voltage rating with resistive load : 50mA 24VDC
- LED voltage and consumption : 2-colour LED : 2V (3V max.) 20mA
  Other colours : 2V (3V max.) 10mA
  A resistor must be series-connected by the user **
- Initial contact resistance : 100 mΩ max.
- Insulation resistance : 1.000 MΩ min. at 500VDC
- Dielectric strength : 500 Vrms 50 Hz min. between terminals
  2.000 Vrms 50 Hz min. between terminals and frame
- Electrical life : 1.000.000 cycles at full load
- Operating force : 7 N ±2N
- Torque : 5 Nm min.- 14 Nm max. applied to nut
- Panel thickness : 1 (.039) to 6 mm (.236) max.
- Operating temperature : -30°C to +70°C
- Hand soldering : 270°C, 3 seconds max.
- Packaging unit : 40 pieces

** Resistor value = $\frac{\text{supply voltage - LED forward voltage}}{\text{LED forward current}}$

MATERIALS

- Case : PBT UL94-V0
- Terminals : brass, gold plated
- Contacts : gold plated dome
- Bushing and actuator : see next page
- LED

CUT-OUT

- Panel cut-out : Ø 19,2 mm (.755)
- Min. pitch for matrix mounting : 30 mm x 30 mm (1.181x1.181)

To order a product, select a basic model below and add the desired options selected on next page.

B2

Flat actuator - non-illuminated

Hex nut 22 (.866) across flats



Solder lug terminals
AV09C703D2



Screw terminals
AV09C703D9



Also available with curved actuator :
AV19C703D2 or **AV19C703D9**

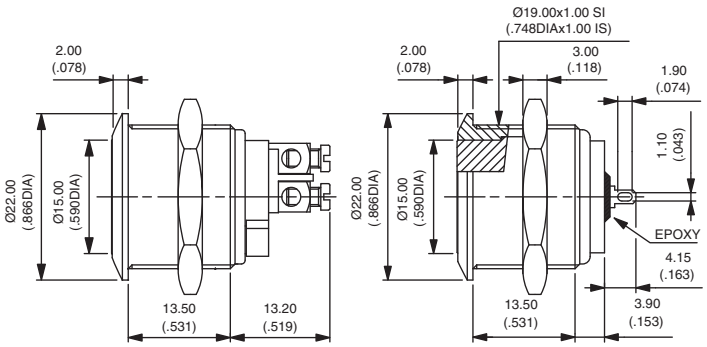

Flat actuator - illuminated

Hex nut 22 (.866) across flats



Solder lug terminals
AV09C7L3D2



Screw terminals
AV09C7L3D9

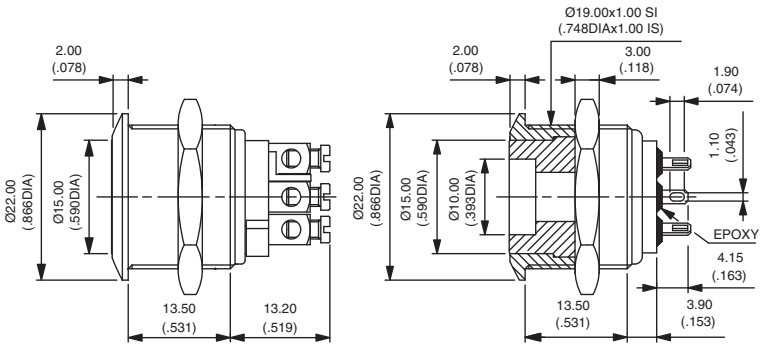

AV series

Tactile security pushbutton switches Ø 19 mm (.748)

Options

OPTIONS

After selecting basic model no., fill in last 4 boxes with desired options.

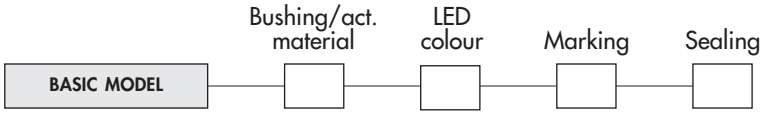

BUSHING/ACTUATOR MATERIALS

Non-illuminated models

CODE	BUSHING	ACTUATOR
00 (std)	**Nickel plated brass**	**Nickel plated brass**
10	Nickel plated brass	Stainless steel
30	Chrome plated brass	Stainless steel
40	Stainless steel	Stainless steel
80	Varnished polished brass	Varnished polished brass

Illuminated models

CODE	BUSHING	ACTUATOR
00 (std)	**Nickel plated brass**	**Nickel plated brass**
20	Chrome plated brass	Chrome plated brass
40	Stainless steel	Stainless steel
50	Stainless steel	Nickel plated brass
80	Varnished polished brass	Varnished polished brass

B2

LED COLOURS

Blank No LED

1: Blue - **3** : Green - **5** : Yellow - **6** : Red - **7** : White - **9** : Amber - **2 :** Red/green

MARKING

For **flat or curved actuator.**

- by engraving on non-illuminated brass actuator (stainless steel on request).
- by hot stamping on thermoplastic insert (illuminated actuators)

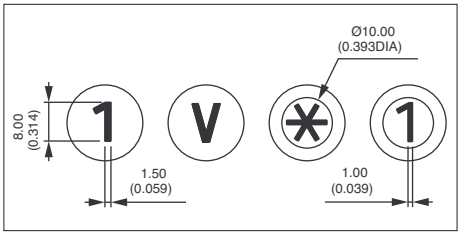

Select an option from each of the two tables below.

TYPE OF MARKING

CODE	TYPE
0 to 9	Numbers 0 to 9
X	Symbol *
Y	Symbol #
A to N	Letters A to N
P to W	Letters P to W
0	Letter O

Letter O : same code and same design as number 0.

For special symbols, consult factory.
Minimum order : 500 pieces

COLOUR OF MARKING

CODE	COLOUR
Non-illuminated actuators	
0 (standard)	Same as finish
2	Black

Note : a finished product supplied in version "0" cannot be modified to version "2".

Illuminated actuators	
2	Black (on white)

SEALING

Blank No sealing

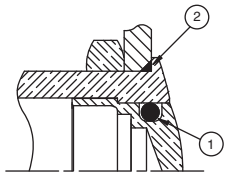

K Front panel sealing (IP65)

① internal gasket
② external gasket

MODEL STRUCTURE

AV series

Tactile security pushbuttons Ø 19 mm (.748) with overmolded actuator

Illuminated and non-illuminated - momentary (NO)

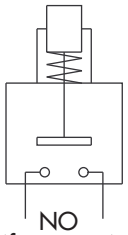

NO
(function 3)

ORDER FORMAT

AV	9		D		OPTIONS
SERIES	Bush./act. configuration	Illumination S0 No SL Illum.	Contacts	Terminals 2 Solder 9 Screw	See next page

SPECIFICATIONS

- **Travel : 0,7 mm** (.027) ± 0,1 mm (.003)
- Max. current/voltage rating with resistive load : 50mA 24VDC
- LED voltage and consumption : 2-colour LED : 2V (3V max.) 20mA
  Other colours : 2V (3V max.) 10mA
  (a resistor must be series-connected by the user)**
- Initial contact resistance : 100 mΩ max.
- Insulation resistance : 1.000 MΩ min. at 500VDC
- Dielectric strength : 500 Vrms 50 Hz min. between terminals
  2.000 Vrms 50 Hz min. between terminals and frame
- Electrical life : 1.000.000 cycles at full load
- Operating force : 7 N ±2N - Sealing option K will increase the operating force.
- Torque : 5 Nm min.- 14 Nm max. applied to nut
- Panel thickness : 1 (.039) to 6 mm (.236) max.
- Operating temperature : -30°C to +70°C
- Hand soldering : 270°C, 3 sec. max.
- Packaging unit : 16 pieces

** Resistor value = $\frac{\text{supply voltage - LED forward voltage}}{\text{LED forward current}}$

MATERIALS

- Case : PBT UL94-V0
- Terminals : brass, gold plated
- Contacts : gold plated dome
- Bushing : see next page
- Actuator : stainless steel, with thermoplastic overmolding
- LED

CUT-OUT

- Panel cut-out : Ø 19,2 mm (.755)
- Min. pitch for matrix mounting :
  30 mm x 30 mm (1.181x1.181)

To order a product, select a basic model below and add the desired options selected on next page.

B2

Flat actuator - solder lug terminals

Hex nut 22 (.866) across flats



Illuminated
AV9SLD2

Non-illuminated
AV9S0D2

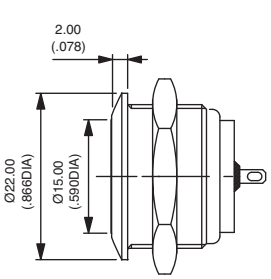

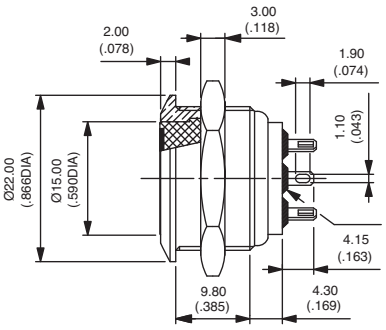

Also available with bushing Ø 22 (.866) : on request.

Flat actuator - screw terminals

Hex nut 22 (.866) across flats



Illuminated
AV9SLD9

Non-illuminated
AV9S0D9

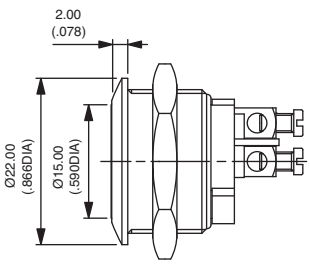

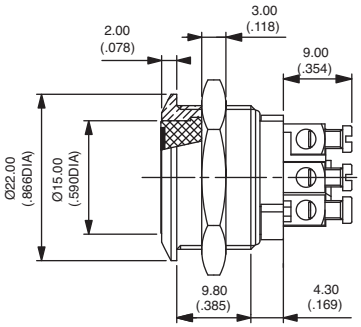

Also available with bushing Ø 22 (.866) : on request.

AV series

Tactile security pushbuttons Ø 19 mm (.748) with overmolded actuator

Options

OPTIONS

After selecting basic model no., fill in last 5 boxes with desired options.

BASIC MODEL	Bushing material	Over-molding	LED colour	Actuator type	Sealing
	□	□	□	□	□

BUSHING MATERIALS

CODE	MATERIAL
0 (std)	**Nickel plated brass**
2	Chrome plated brass
4	Stainless steel
5	Gold plated brass
6	Chrome plated brass, satin
7	Chrome pl. brass, black
8	Varnished polished brass
9	Polished brass

OVERMOLDING COLOURS

CODE	COLOUR	CODE	COLOUR
1	Blue	**6**	Red
2	Black *	**7**	White
3	Green	**8**	Translucent
4	Grey *	**9**	Orange
5	Yellow		

* non-illuminated only

LED COLOURS

CODE	COLOUR
Blank	No LED
1	Blue
2	Red/green
3 **	Green
V **	Green, high intensity
5	Yellow
6	Red
7	White
9	Amber

** To order a green LED for actuator style 002, always use code V.
Other actuator styles can be ordered with LED code 3 or V.

ACTUATOR STYLES

The ring and symbols are obtained by photochemical engraving of a stainless steel insert.
The insert is then overmolded in the desired colour.

The following actuator styles are available. For other types, consult factory.

CODE	001	002	003	004	005
DESCRIPTION	Illuminated ring and disc	Illuminated ring	Arrow	Loudspeaker OFF	Opening
RING/SYMBOL					

CODE	006	008	009	010	011
DESCRIPTION	Validation	Closing	Standby	Cancel	Power
SYMBOL					

SEALING

Blank No sealing

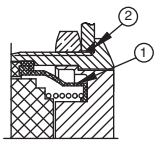

K Front panel sealing (IP67)

① internal membrane
② external gasket

Recommended panel mounting for IP69K

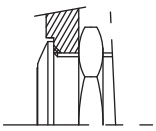

K Front panel sealing (IP69K)

MODEL STRUCTURE

AV series

Tactile security pushbuttons Ø 22 mm (.866) with overmolded actuator

Illuminated and non-illuminated - momentary (NO)

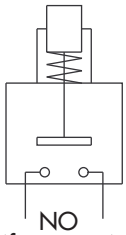

NO
(function 3)

ORDER FORMAT **UG1410A**

AV	3		D		OPTIONS
SERIES	Bush./act. configuration	Illumination S0 No SL Illum.	Contacts	Terminals 2 Solder 9 Screw	See next page

SPECIFICATIONS

- **Travel : 0,7 mm** (.027) ± 0,1 mm (.003)
- Max. current/voltage rating with resistive load : 50mA 24VDC
- LED voltage and consumption : 2-colour LED : 2V (3V max.) 20mA
  Other colours : 2V (3V max.) 10mA
  (a resistor must be series-connected by the user)**
- Initial contact resistance : 100 mΩ max.
- Insulation resistance : 1.000 MΩ min. at 500VDC
- Dielectric strength : 500 Vrms 50 Hz min. between terminals
  2.000 Vrms 50 Hz min. between terminals and frame
- Electrical life : 1.000.000 cycles at full load
- Operating force : 7 N ±2N - sealing option K will increase the operating force.
- Torque : 5 Nm min.- 14 Nm max. applied to nut
- Panel thickness : 1 (.039) to 6 mm (.236) max.
- Operating temperature : -30°C to +70°C
- Hand soldering : 270°C, 3 sec. max.
- Packaging unit : 16 pieces

** Resistor value = $\frac{\text{supply voltage - LED forward voltage}}{\text{LED forward current}}$

MATERIALS

- Case : PBT UL94-V0
- Terminals : brass, gold plated
- Contacts : gold plated dome
- Bushing : see next page
- Actuator : stainless steel, with thermoplastic overmolding
- LED

CUT-OUT

- Panel cut-out : Ø 22,2 mm (.874)
- Min. pitch for matrix mounting :
  30 mm x 30 mm (1.181x1.181)

To order a product, select a basic model below and add the desired options selected on next page.

B2

Flat actuator - solder lug terminals

Hex nut 25 (.984) across flats



Illuminated
AV3SLD2

Non-illuminated
AV3S0D2

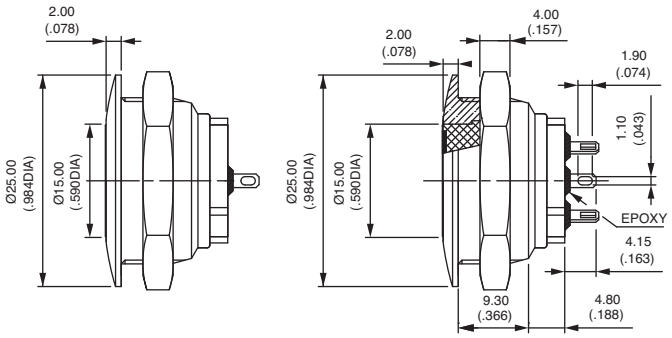

Flat actuator - screw terminals

Hex nut 25 (.984) across flats



Illuminated
AV3SLD9

Non-illuminated
AV3S0D9

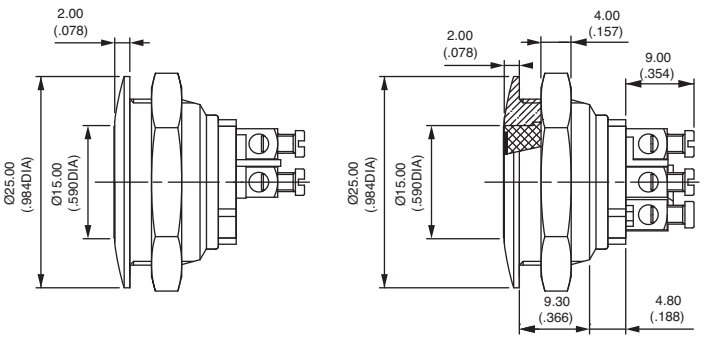

AV series

Tactile security pushbuttons Ø 22 mm (.866) with overmolded actuator

Options

After selecting basic model no., fill in last 5 boxes with desired options.

BASIC MODEL	Bushing material	Over-molding	LED colour	Actuator type	Sealing
	□	□	□	□	□

BUSHING MATERIALS

CODE	MATERIAL
0 (std)	**Nickel plated brass**
2	Chrome plated brass
4	Stainless steel
5	Gold plated brass
6	Chrome plated brass, satin
7	Chrome pl. brass, black
8	Varnished polished brass
9	Polished brass

OVERMOLDING COLOURS

CODE	COLOUR	CODE	COLOUR
1	Blue	**6**	Red
2	Black *	**7**	White
3	Green	**8**	Translucent
4	Grey *	**9**	Orange
5	Yellow		

* non-illuminated only

LED COLOURS

CODE	COLOUR
Blank	No LED
1	Blue
2	Red/green
3 **	Green
V **	Green, high intensity
5	Yellow
6	Red
7	White
9	Amber

** To order a green LED for actuator style 002, always use code V.
Other actuator styles can be ordered with LED code 3 or V.

ACTUATOR STYLES

The ring and symbols are obtained by photochemical engraving of a stainless steel insert.
The insert is then overmolded in the desired colour.

The following actuator styles are available. For other types, consult factory.

CODE	001	002	003	004	005
DESCRIPTION	Illuminated ring and disc	Illuminated ring	Arrow	Loudspeaker OFF	Opening
RING/SYMBOL					

CODE	006	008	009	010	011
DESCRIPTION	Validation	Closing	Standby	Cancel	Power
SYMBOL					

SEALING

Blank No sealing

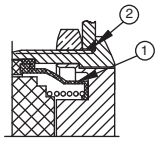

K Front panel sealing (IP67)

① internal membrane
② external gasket

Recommended panel mounting for IP69K

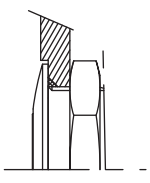

K Front panel sealing (IP69K)

MODEL STRUCTURE

AV series

Security pushbutton switches Ø 22 mm (.866)

Momentary (NO)

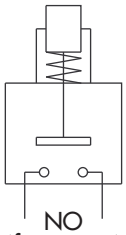

NO
(function 3)

ORDER FORMAT

AV			3			OPTIONS
SERIES	Bushing/act. configuration	Case	Function	Contacts	Terminals	
	03 Flat actuator **02** Curved actuator **M2** Curved act.+flatted bush. **M3** Flat act.+flatted bush.	**000** Long **100** Short	**3** NO	**A** Silver **C** Brass, silver pl.	**9** Screw **2** Quick-connect	See "Options" page.

SPECIFICATIONS

- Max. current/voltage rating with resistive load :
  - A contacts : 4A 12VDC, 500.000 cycles
  - C contacts : 2A 48 VDC, 10.000 cycles
- Approved ratings of models with long case and A contacts (AV..000) : UL-CSA : 4A 250VAC - 8A 125VAC - 6.000 cycles
- Initial contact resistance : 10 mΩ max.
- Insulation resistance : 1.000 MΩ min. at 500VDC
- Dielectric strength : 2.000 Vrms 50 Hz min. between terminals and frame 2.000 Vrms 50 Hz min. between terminals
- Torque : 5 Nm min.- 14 Nm max. applied to nut
- Panel thickness : 1 (.039) to 11 mm (.433) max.
- Operating temperature : -30°C to +70°C
- Low level or mechanical life : 1.000.000 cycles
- Hand soldering : 300°C, 3 sec. max.
- Packaging unit : 20 pieces

MATERIALS

- Case : PBT
- Contacts : silver (A) or brass, silver plated (C)
- Bushing and actuator : see "Options" page

CUT-OUTS

- Panel cut-out : Ø 22,2 mm (.874)
- Min. pitch for matrix mounting : 30 mm x 30 mm (1.181x1.181)

B2

To order a product, select a basic model below or on next page and add the desired options.

BASIC MODEL

Flat actuator - short case - 48VDC - AV03100

Hex nut 25 (.984) across flats



Screw terminals
AV031003•9



Solder lug / quick-connect term.
AV031003•2



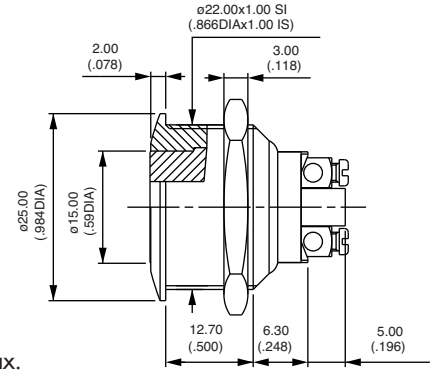

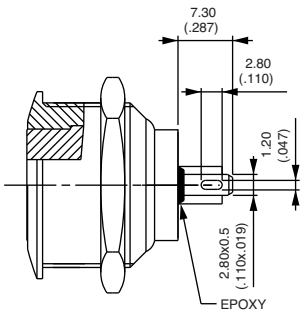

Screw terminals for wires 1,5 mm² max.

Contacts : remplace • with A (silver) or C (silver plated brass).

Curved actuator - short case

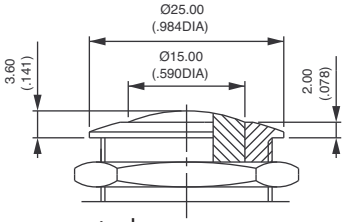

Screw terminals
AV021003•9
Solder lug / quick-connect terminals
AV021003•2

Flatted bushing - short case - AVM3 and AVM2

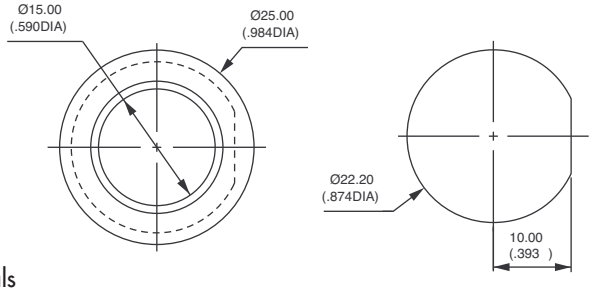

Flat actuator, screw terminals
AVM31003•9
Curved actuator, screw terminals
AVM21003•9

AV series

Security pushbutton switches Ø 22 mm (.866)

Momentary (NO) - momentary (NC) - alternate action

MODEL STRUCTURE

B2

Flat actuator - long case - 4A 250VAC/8A 125VAC - UL/CSA - AV03000

Hex nut 25 (.984) across flats



Screw terminals
AV030003A9



To order switches **marked UL-CSA**, add "**UU**" at the end of model number.

Screw terminals for wires 1,5 mm² max.

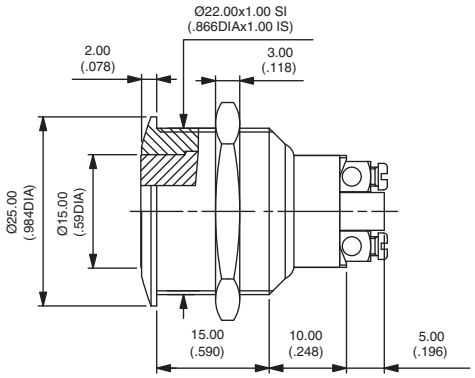

Curved actuator - long case

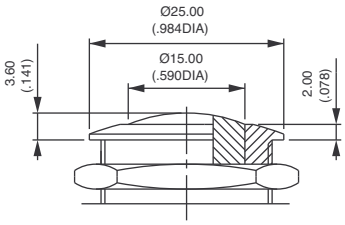

Screw terminals
AV020003A9

Flatted bushing - long case - AVM3 and AVM2

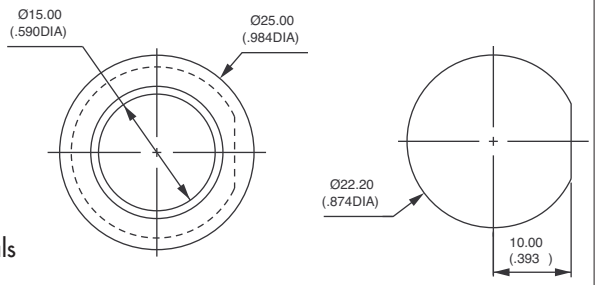

Flat actuator, screw terminals
AVM30003•9
Curved actuator, screw terminals
AVM20003•9

MOMENTARY NORMALLY CLOSED MODEL (NC)

Bushing Ø 22 (.866) - AV..1200

Hex nut 25 (.984) across flats

- **Single pole, screw terminals, without marking**
- Silver plated copper contacts (C)
- Max. current/voltage rating with resistive load :
  2A 250VAC - 3A 125VAC - 2,5A 24VDC
- Dielectric strength :
  2.000 Vrms 50 Hz min. betw. term. and frame
  2.000 Vrms. 50 Hz min. between terminals
- Electrical life : 100.000 cycles at 0,3A 24VAC or DC
  10.000 cycles at full load
- Packaging unit : 20 pieces

Flat actuator
AV031202C900

Curved actuator
AV021202C900



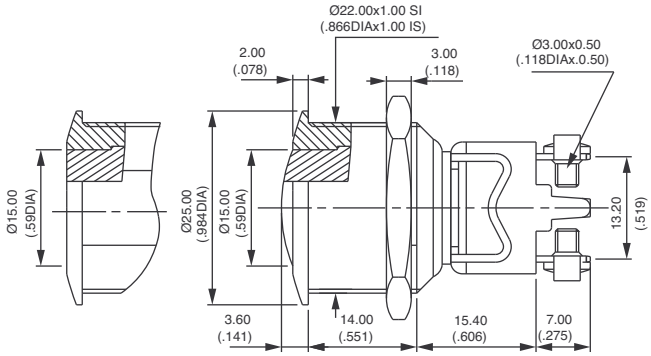

Bushing Ø 22 (.866) - alternate action - AV..4700

Hex nut 25 (.984) across flats

- **Double pole, solder lug/quick-connect term., curved actuator**
- Silver contacts
- Max. current/voltage rating with resistive load :
  3(1,5)A 250VAC - 6A 125VAC - 3A 24VAC or DC
- Dielectric strength :
  3.000 Vrms min. between terminals and frame
- Electrical life : 10.000 cycles at full load
  50.000 cycles at 1A 24VAC or DC
- Mechanical life : 100.000 cycles
- Packaging unit : 10 pieces

AV044746A200 ON - ON

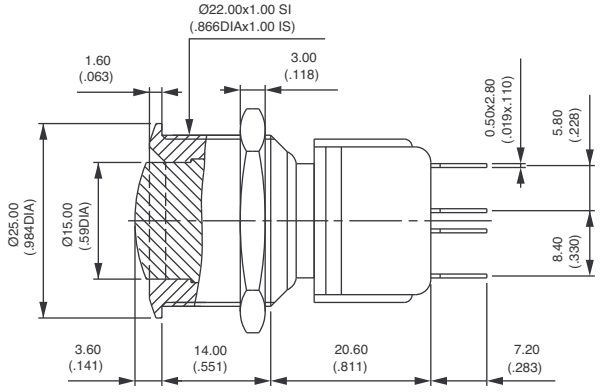

Further specifications : see previous page. Bushing/actuator materials, marking and sealing : see "options" on next page.

After selecting basic model number, fill in last 3 boxes with desired options.

BASIC MODEL	Bush./actuator material	Marking	Sealing
	☐	☐	☐

BUSHING/ACTUATOR MATERIALS

Flat or curved metal actuator

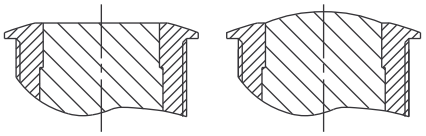

CODE	BUSHING	ACTUATOR
00 (standard)	**Nickel plated brass**	**Nickel plated brass**
10	Nickel plated brass	Stainless steel
12	Nickel plated brass	Chrome plated brass
20	Chrome plated brass	Chrome plated brass
30	Chrome plated brass	Stainless steel
40	Stainless steel	Stainless steel
80 **	Varnished polished brass	Varnished polished brass

Flat thermoplastic actuator

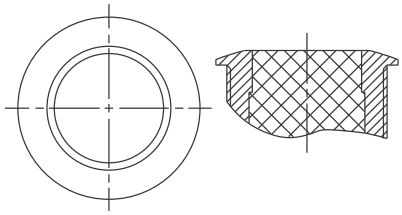

CODE	BUSHING	ACTUATOR COLOUR
0• (standard)	**Nickel plated brass**	Replace • with one of the following codes.
2•	Chrome plated brass	**1** : blue - **1/4** : dark blue - **2** : black - **3** : green
8•	Varnished polished brass	**4** : grey - **5** : yellow - **6** : red - **7/1**: white
		9 : orange

MARKING

Select an option from each of the two tables below.

- By engraving on flat or curved brass actuator (stainless steel on request)
- by hot stamping on flat thermoplastic actuator

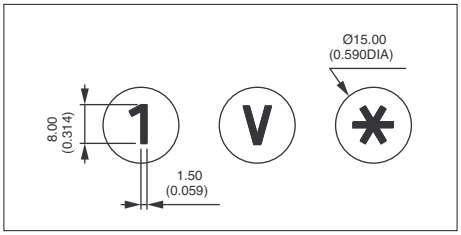

TYPE OF MARKING

CODE	TYPE
0 to 9	Numbers 0 to 9
X	Symbol *
Y	Symbol #
A to N	Letters A to N
P to W	Letters P to W
0	Letter O

Letter O : same code and same design as number 0.

For special symbols, consult factory. Minimum order : 500 pieces

COLOUR OF MARKING

CODE	COLOUR
Brass actuator	
0 (standard)	Same as finish
2	Black

Note : a finished product supplied in version "0" cannot be modified to version "2".

Thermoplastic actuator	
2	Black
7	White

SEALING

Blank No sealing

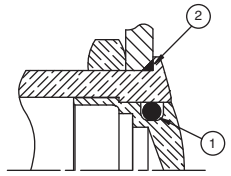

K Frontal panel sealing (IP65)

① internal gasket
② external gasket

AV series

Security pushbutton switches Ø 22 mm (.866)

With illuminated ring - momentary (NC/NO)

MODEL STRUCTURE

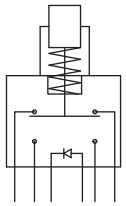

NC/NO

ORDER FORMAT

Options : see next page.

AV	3			2	
SERIES	Bushing dia. 22 mm	LED colour	LED resistor	Contacts	Terminals

LED colour
0 : no LED - **1** : blue - **V** : green
5 : yellow - **6** : red - **7** : white - **9** : amber

LED resistor
0 No resistor supplied
1 12VDC resistor
2 24VDC resistor
4 48VDC resistor

Contacts
2 Silver

Terminals
2 Solder / quick-connect
F Flying leads
C Cable

SPECIFICATIONS

- Travel : 2 mm ± 0,3 mm (.003)
- Max. current/voltage rating with resistive load : 1A 30VDC
- LED voltage : 12VDC, 24VDC or 48VDC
  (If not supplied by APEM, a resistor must be series-connected by the user)**
- Initial contact resistance : 100 mΩ max.
- Insulation resistance : 10 MΩ min. at 500VDC
- Dielectric strength : 500 Vrms 50 Hz min. between terminals
  1.000 Vrms 50 Hz min. between terminals and frame
- Electrical life : 250.000 cycles at full load
- Operating force : 5N ± 2N
- Torque : 5 Nm min.- 14 Nm max. applied to nut
- Panel thickness : 1 (.039) to 6 mm (.236) max.
- Low level or mechanical life : 1.000.000 cycles
- Operating temperature : -30°C to +85°C
- Hand soldering : 350°C, 5 seconds max.
- Packaging unit : flying lead/cable models : 1 piece - other models : 40 pieces

** Resistor value = $\frac{\text{supply voltage - LED forward voltage}}{\text{LED forward current}}$

MATERIALS

- Case : polyamide, glass filled
- Contacts : silver
- Bushing : see next page
- Actuator : see next page
- Elastomeric membrane : silicone
- LED

CUT-OUT

- Panel cut-out : Ø 22,2 mm (.874)
- Min. pitch for matrix mounting :
  30 mm x 30 mm (1.181x1.181)

To order a product, select a basic model below and add the desired LED colour and voltage. Then select the desired options on next page.

Flat actuator - solder lug terminals

Hex nut 25 (.984) across flats



Illuminated (select LED colour above) *
AV3•022 ON - MOM

Non-illuminated
AV30022 ON - MOM

*** No LED resistor supplied on this model.**

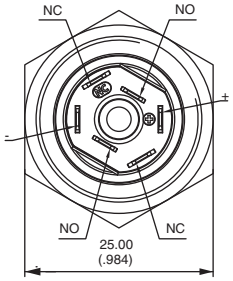

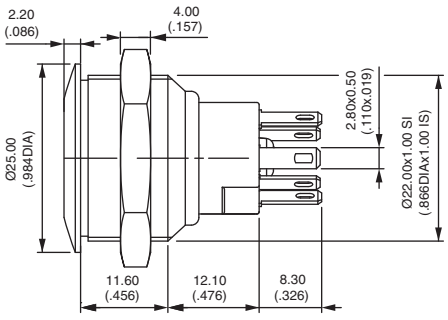

Flat actuator - flying lead terminals

Hex nut 25 (.984) across flats



Illuminated (select LED colour & resistor above)
AV3••2F ON - MOM

Non-illuminated
AV3002F ON - MOM

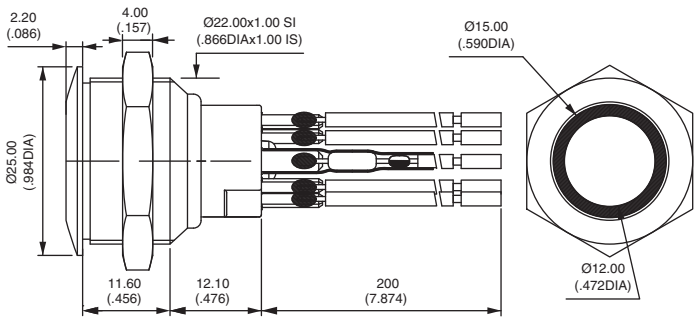

Wire colours : black: NC, orange: NO, red: LED anode (+), blue : LED cathode (-)

OPTIONS

AV series

Security pushbutton switches Ø 22 mm (.866)

With illuminated ring - momentary changeover (NC/NO)

Flat actuator - cable terminals

Hex nut 25 (.984) across flats



Illuminated (select colour & resistor)
AV3••2C ON - MOM

Non-illuminated
AV3002C ON - MOM

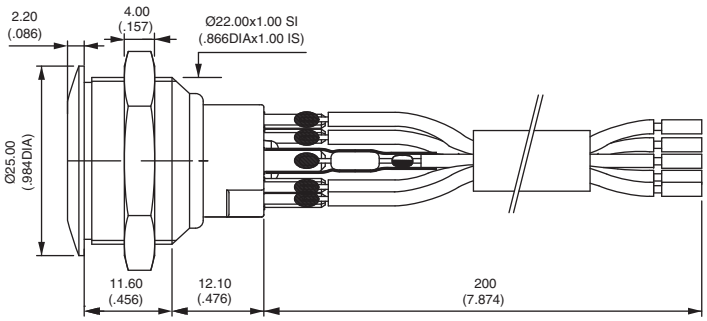

After selecting basic model No., fill in last 5 boxes with desired options.

BASIC MODEL	Flying lead protection	Flying lead/ cable length	Ring colour	Bushing / plunger mat.	Sealing

FLYING LEAD PROTECTION

0	No protection and/or no flying leads
1	Heat-shrink sleeves
2	Tube + epoxy

WIRE/CABLE LENGTH

000	No flying leads / no cable
020	Length 20 cm (7.874) - standard
XXX	Length in centimeters

RING COLOURS

CODE	COLOUR	CODE	COLOUR
1	Blue	**6**	Red
2	Black *	**7**	Opal white (std)
3	Green	**8**	Translucent
4	Grey *	**9**	Orange
5	Yellow		

* non-illuminated only

BUSHING/PLUNGER MATERIALS

CODE	BUSHING	ACTUATOR
00	Brass, nickel plated	Brass, nickel plated
40	Stainless steel 303	Stainless steel 303
4A	Stainless steel 304	Stainless steel 304
4B	Stainless steel 316	Stainless steel 316
70	Chrome pl. brass, black	Chrome pl. brass, black

Other : on request.

SEALING

Blank No sealing



K Front panel sealing (IP67)

① internal membrane
② external gasket

B2

AV series

Security pushbutton switches Ø 22 mm (.866)

Illuminated and non-illuminated - latching

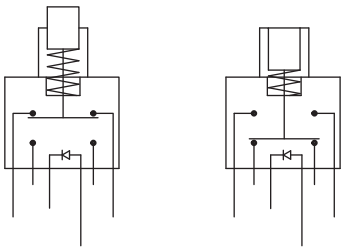

ORDER FORMAT

AV		1			E	A		OPTIONS
SERIES	Actuator type 03 Flat 02 Curved	Bush./act. config.	Illumin. 0 No L Illum.	LED colour 0 No LED 1 Blue 3 Green 5 Yellow 6 Red	Function	Contacts	Terminals 2 Solder 4 PC 8 Quick-connect	

See next page.

SPECIFICATIONS

- Max. current/voltage rating with resistive load : 2A 48 VDC
- LED voltage and consumption : blue 3,5V 10mA, green : 2V 10mA yellow & red : 2V 20mA (a resistor must be series-connected by the user)**
- Initial contact resistance : 50 mΩ max.
- Insulation resistance : 1.000 MΩ min. at 500VDC
- Dielectric strength : 1 000 Vrms 50 Hz min. between terminals 500 Vrms 50 Hz min. between terminals and frame
- Electrical life : 500.000 cycles at 2A 48VDC
- Torque : 5 Nm min.- 14 Nm max. applied to nut
- Panel thickness : 1 (.039) to 9 mm (.354) max.
- Operating temperature : -30°C to +70°C
- Low level or mechanical life : 1.000.000 cycles
- Hand soldering : 300°C, 4 seconds max.
- Packaging unit : 20 pieces

** Resistor value = $\frac{\text{supply voltage - LED forward voltage}}{\text{LED forward current}}$

MATERIALS

- Case : PA6T UL94-V0
- Contacts : silver
- Actuator and bushing : see next page
- LED

CUT-OUT

- Panel cut-out : Ø 22,2 mm (.874)
- Min. pitch for matrix mounting : 30 mm x 30 mm (1.181x1.181)

To order a product, select a basic model below and add the desired options selected on next page.

Standard actuator position : the actuator is flush in the non-latched position and recessed in the latched position.

Non-illuminated - solder lug terminals

Hex nut 25 (.984) across flats



Flat actuator *
AV03100EA2 ON - ON

Curved actuator
AV02100EA2 ON - ON

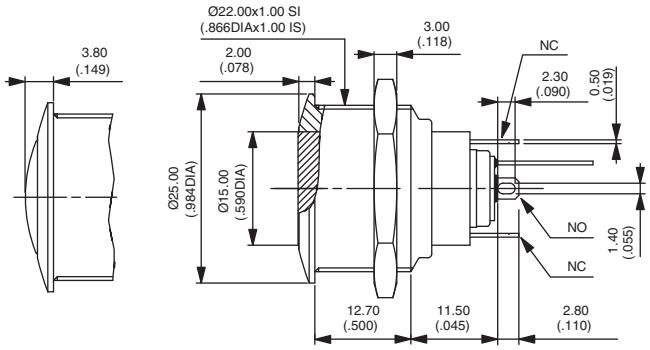

* Also available with prominent actuator in the non-latched position

Illuminated - solder lug terminals

Hex nut 25 (.984) across flats



Flat actuator
AV031L•EA2 ON - ON

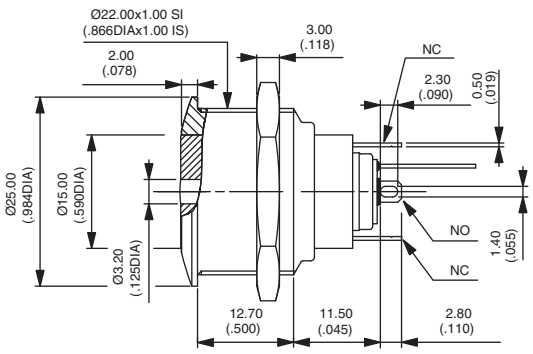

Replace • with desired LED colour.

Straight PC terminals

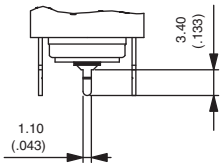

Replace 2 with **4** at the end of the model numbers shown on previous page.

Quick-connect terminals

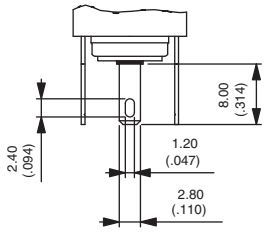

Replace 2 with **8** at the end of the model numbers shown on previous page.

After selecting basic model number, fill in last 2 boxes with desired options.

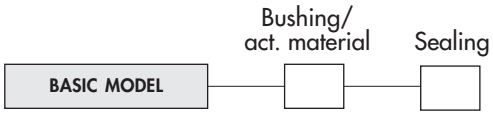

BUSHING/ACTUATOR MATERIALS

CODE	BUSHING	ACTUATOR
00 (std)	**Nickel plated brass**	**Nickel plated brass**
10	Nickel plated brass	Stainless steel
40	Stainless steel	Stainless steel
50	Stainless steel	Nickel plated brass

SEALING

Blank No sealing

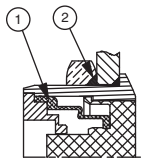

K Frontal panel sealing (IP65)

① elastomeric membrane
② external gasket

AV series

Security pushbutton switches Ø 22 mm (.866) or 24 mm (.944) with large actuator

Momentary (combined NC+NO)

MODEL STRUCTURE

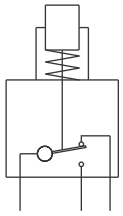

Combined NC+NO

ORDER FORMAT

AV		L		OPTIONS	
SERIES	Bushing diameter **22** 22 mm **24** 24 mm	Bush./act. config.	Act. style **P** Flat **B** Curved **C** Recessed	Bush./actuator material See next page	Terminals **4** Quick-connect **2** Solder lug

B2

SPECIFICATIONS

- Max. current/voltage rating with resistive load : 5A 250VAC
- Initial contact resistance : 100 mΩ max.
- Insulation resistance : 1.000 MΩ min. at 500VDC
- Dielectric strength : 2.000 Vrms 50 Hz min. between terminals and frame
- Electrical life : 1.000.000 cycles at 1A 250VAC
  100.000 cycles at full load
- Torque : 5 Nm min.- 14 Nm max. applied to nut
- Panel thickness : 1 (.039) to 6 mm (.236) max.
- Operating temperature : -20°C to +55°C
- Low level or mechanical life : 3.000.000 cycles
- Front panel sealing : IP65
- Hand soldering : 300°C, 5 sec. max.
- Packaging unit : 20 pieces (except black chrome plated : 16 pieces)

MATERIALS

- Case : polyester, glass filled
- Contacts : silver/nickel alloy
- Bushing and actuator :
  see next page.

CUT-OUT

- Panel cut-out : Ø 22,2 mm (.874) or Ø 24,2 mm (.952)
- Min. pitch for matrix mounting :
  30 mm x 30 mm (1.181x1.181)
  or 33 mm x 33 mm (1.299x1.299)

To order a product, select a basic model below or on next page and add the desired bushing/actuator materials.

BASIC MODEL

Flat actuator - AV22LP

→ O-ring

Hex nut 25 (.984) across flats



Quick-connect terminals
AV22LP••4

Solder lug terminals
AV22LP••2

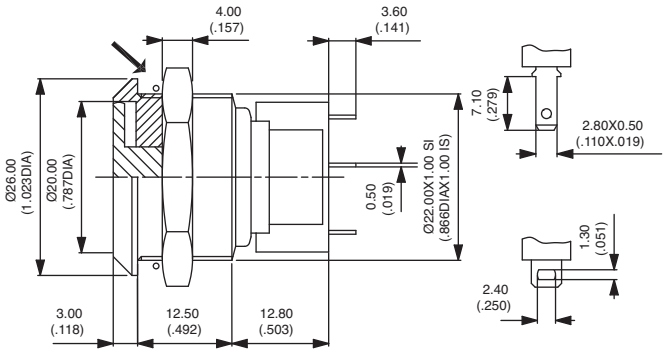

Curved actuator - AV22LB

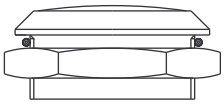

Quick-connect terminals
AV22LB••4
Solder lug terminals
AV22LB••2

Recessed actuator - AV22LC

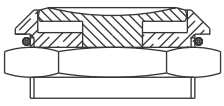

Quick-connect terminals
AV22LC••4
Solder lug terminals
AV22LC••2

OPTIONS

AV series

Security pushbutton switches Ø 22 mm (.866) or 24 mm (.944) with large actuator

Momentary (combined NC+NO)

BASIC MODEL

Flat actuator - low profile - AV24LP



Quick-connect terminals
AV24LP••4



Solder lug terminals
AV24LP••2



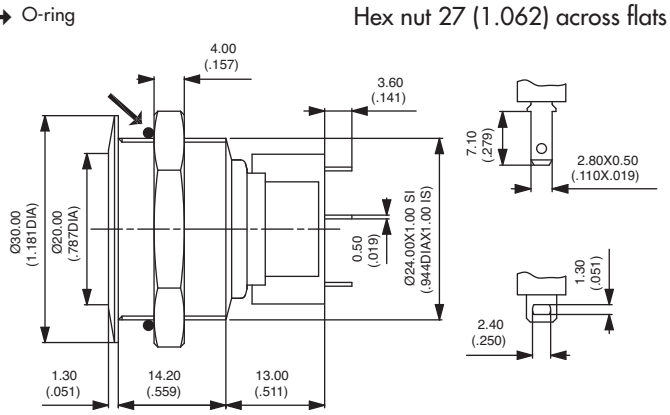

Curved actuator - AV24LB

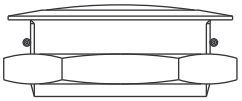

Quick-connect terminals
AV24LB••4
Solder lug terminals
AV24LB••2

Recessed actuator - AV24LC

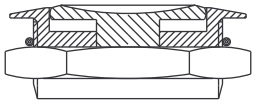

Quick-connect terminals
AV24LC••4
Solder lug terminals
AV24LC••2

BUSHING/ACTUATOR MATERIALS

Models with non-anodized actuator

CODE	BUSHING	ACTUATOR
40 (standard)	**Stainless steel**	**Stainless steel**
20	Chrome plated brass	Chrome plated brass

Models with anodized actuator

CODE	BUSHING	ACTUATOR COLOUR
1•	Black chrome plated brass	Replace • with one of the following codes :
2•	Chrome plated brass	**1** : blue - **2** : black - **3** : pale green - **3F** : dark green - **4** : natural - **5** : gold yellow
4•	Stainless steel	**6** : red - **6B** : maroon

B2

AV series

Mushroom head security pushbutton switches Ø 22 mm (.866)

Momentary (combined NC+NO)

MODEL STRUCTURE

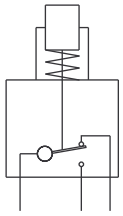

Combined NC+NO

ORDER FORMAT

AV	22	PNA	OPTIONS	
SERIES	Bushing diameter	Bush./act. config.	Actuator colour See below	Terminals 4 Quick-connect 2 Solder lug

SPECIFICATIONS

- Max. current/voltage rating with resistive load : 5A 250VAC
- Initial contact resistance : 100 mΩ max.
- Insulation resistance : 1.000 MΩ min. at 500VDC
- Dielectric strength : 2.000 Vrms 50 Hz min. between terminals and frame
- Electrical life : 1.000.000 cycles at 1A 250VAC
  50.000 cycles at full load
- Torque : 5 Nm min.- 14 Nm max. applied to nut
- Panel thickness : 1 (.039) to 6 mm (.236) max.
- Operating temperature : -20°C to +55°C
- Low level or mechanical life : 1.000.000 cycles
- Front panel sealing : IP65
- Hand soldering : 300°C, 5 sec. max.
- Packaging unit : 16 pieces

MATERIALS

- Case : polyester, glass filled
- Contacts : silver/nickel alloy
- Bushing : brass, nickel plated
- Actuator : aluminium, anodized

CUT-OUT

- Panel cut-out : Ø 22,2 mm (.874)
- Min. pitch for matrix mounting : 30 mm x 30 mm (1.181x1.181)

To order a product, select a basic model below and add the desired actuator colour.

BASIC MODEL

Mushroom head actuator - AV22PNA



Quick-connect terminals
AV22PNA•4

Solder lug terminals
AV22PNA•2

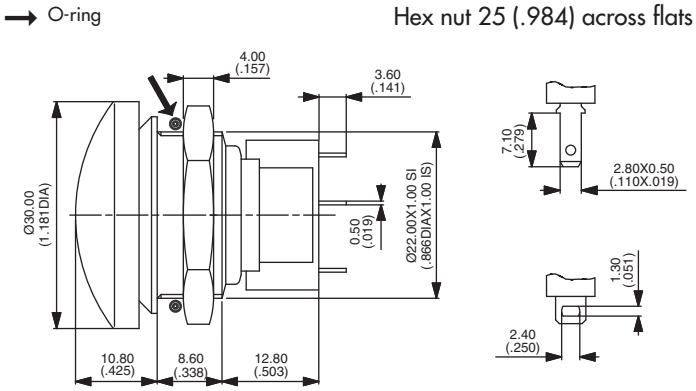

ACTUATOR ANODIZATION COLOURS

1 : blue - **2** : black - **3** : pale green - **3F** : dark green - **4** : natural - **5** : gold yellow - **6** : red - **6B** : maroon