JUMO GmbH & Co. KG
Delivery address: Mackenrodtstraße 14
36039 Fulda, Germany
Postal address: 36035 Fulda, Germany
Phone: +49 661 6003-0
Fax: +49 661 6003-607
Email: mail@jumo.net
Internet: www.jumo.net

JUMO Instrument Co. Ltd.
JUMO House
Temple Bank, Riverway
Harlow, Essex CM 20 2DY, UK
Phone: +44 1279 63 55 33
Fax: +44 1279 62 50 29
Email: sales@jumo.co.uk
Internet: www.jumo.co.uk

JUMO Process Control, Inc.
6733 Myers Road
East Syracuse, NY 13057, USA
Phone: +1 315 437 5866
Fax: +1 315 437 5860
Email: info.us@jumo.net
Internet: www.jumousa.com

JUMO Wtrans T
RTD Temperature Probe with Wireless Data Transmission



Basic type 902930/10

- **For operating temperatures from -30 to +260 °C or -200 to +600 °C**
- **For mobile or stationary temperature measurement**
- **Open air range 300 m with interference-resistant transmission**
- **Wiring work is eliminated with modern wireless technology**
- **Approval according to ATEX directive 2014/34/EU**

The Wtrans T is used in connection with a Wtrans receiver for stationary or mobile recording of temperatures within the operating range of -30 to +260 °C or -200 to +600 °C. This measured temperature value is transmitted wirelessly to the receiver of the Wtrans measuring system; here it is displayed and available digitally at the RS485 interface as well as an analog output. One receiver variant can signal various alarms at two relay outputs.
The transmission electronics of the RTD temperature probe are placed in the housing so that they are vibration-resistant; the housing is oil-resistant and acid-proof. The ambient temperature of the housing may either be from -30 to +85 °C or -25 to +125 °C. The protection type is IP67. A durable lithium battery with 3.6 V is used for voltage supply.
The radio frequencies of the Wtrans measuring system (868.4 MHz or 915 MHz) are largely impervious to external interferences and allow transmission even in a rough industrial environment. When using the antenna holder for wall mounting with the 3 m antenna cable for the receiver, the open air range is 300 m.
The stainless steel protection tube with the Pt1000 temperature sensor according to DIN EN 60751, class A in a 3-wire circuit is available with a flat, oblique, or centered probe tip. The insertion length is from 30 to 10000 mm. Variants with an extension tube or an M12 × 1 plug connection to connect Pt1000 RTD temperature probes are also available.
The Wtrans T is also available as a version with ATEX approval (basic types 902930/15, .../17, .../55). These devices can be installed directly in potentially explosive areas up to zone 0. The receiver is installed outside the Ex zone. The radio data transmission from the Ex-area avoids costly installations with cables and protection barriers or supply isolators.
The design type of the JUMO RTD temperature probes must be agreed when placing the order. The Ex variant with M12 connector is always delivered with an approved JUMO RTD temperature probe with PTFE connecting cable. Devices with process connections can be ordered in versions with Ex zone separation.
A setup program is available as an accessory for easy configuration and parameterization of the Wtrans measuring system on the PC. The OnlineChart function can be used optionally to record the measured values on the PC.

Block diagram

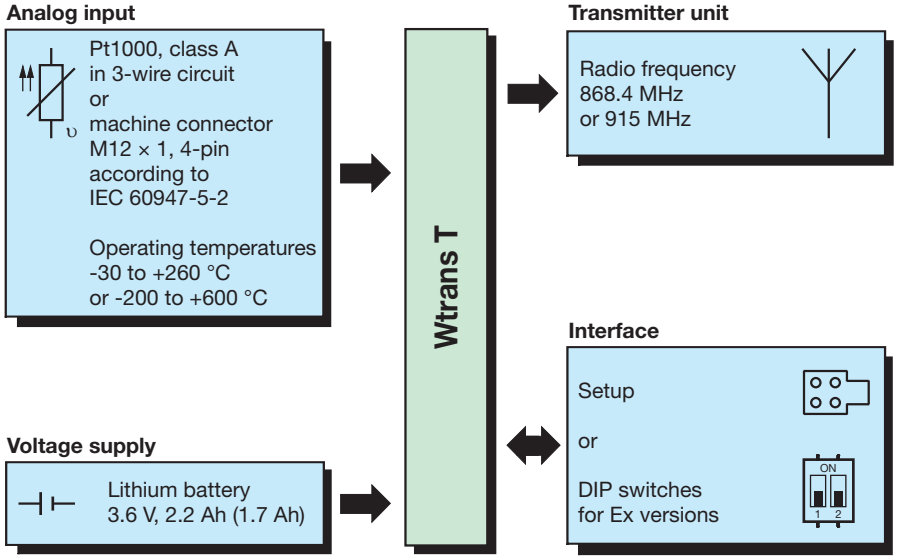

Suitable Wtrans receivers

- Max. 16 Wtrans transmitters per Wtrans receiver
- Little wiring work required due to modern wireless technology
- Radio frequency 868.4 MHz or 915 MHz; in the 915 MHz frequency band, ten frequencies can be configured
- RS485 interface with Modbus protocol
- Four analog outputs
  0(4) to 20 mA / 0 to 10 V
  or
  Two analog outputs
  (0)4 to 20 mA / 0 to 10 V
  and two relay outputs AC 230 V
- For fitting on a DIN-rail
  35 × 7.5 mm
  according to DIN EN 60715

For further information refer to data sheet 902931

Approvals / approval marks (see "Technical data")

JUMO GmbH & Co. KG
Delivery address: Mackenrodtstraße 14
36039 Fulda, Germany
Postal address: 36035 Fulda, Germany
Phone: +49 661 6003-0
Fax: +49 661 6003-607
Email: mail@jumo.net
Internet: www.jumo.net

JUMO Instrument Co. Ltd.
JUMO House
Temple Bank, Riverway
Harlow, Essex CM 20 2DY, UK
Phone: +44 1279 63 55 33
Fax: +44 1279 62 50 29
Email: sales@jumo.co.uk
Internet: www.jumo.co.uk

JUMO Process Control, Inc.
6733 Myers Road
East Syracuse, NY 13057, USA
Phone: +1 315 437 5866
Fax: +1 315 437 5860
Email: info.us@jumo.net
Internet: www.jumousa.com

Technical data

Basic type 902930/10, 902930/12, 902930/20, 902930/22, 902930/50, and 902930/60

Analog input

Measurement input	Pt1000 according to DIN EN 60751, in three-wire circuit
Operating temperature range	-30 to +260 °C in basic type 902930/10 and 902930/20; -50 to +600 °C in basic type 902930/12 and 902930/22; -200 to +600 °C in basic type 902930/50 and 902930/60; Always observe the admissible ambient temperature range for the housing.
Accuracy of the temperature sensor	Class A ±(0.15 K + 0.002 × ItI) ItI = measured temperature in °C without prefix sign
Sensor line resistance	≤ 11 ohm per lead with 3-wire circuit
Sensor current	≤ 500 µA
Measuring circuit monitoring	Detection of probe break and probe short circuit

Output (wireless transmission)

Transmitter detection (transmitter ID)	Max. 5-digit ID, default setting, customer-specific configuration possible
Transmission interval	Adjustable from 1 to 3600 s: In basic type 902930/10, 902930/12, and 902930/50 (default setting = 10 s); Adjustable from 5 to 3600 s: In basic type 902930/20, 902930/22, and 902930/60 (default setting = 15 s)
Radio frequency	868.4 MHz (Europe); 915 MHz (America, Australia, Canada, and New Zealand); 10 frequencies can be configured in the 915 MHz frequency band
Transmission power	< + 10 dBm
Open air range	300 m for 868.4 MHz, 100 m for 915 MHz and when using the antenna holder for wall mounting for the receiver and the 3 m antenna cable. When mounting the antenna directly to the receiver, a reduction in the range of approx. 40 % must be taken into account.
Output signal	882.2 to 1977.1 ohm = -30 to +260 °C; 185.2 to 3137.1 ohm = -200 to +600 °C;
Response time of the complete probe	In water 0.4 m/s / in air 3.0 m/s Ø 4.0 mm: water $t_{0.5}$ approx. 3 s, $t_{0.9}$ approx. 7 s / air $t_{0.5}$ approx. 25 s, $t_{0.9}$ approx. 80 s Ø 6.0 mm: water $t_{0.5}$ approx. 4 s, $t_{0.9}$ approx. 10 s / air $t_{0.5}$ approx. 32 s, $t_{0.9}$ approx. 98 s
Calibration accuracy of the electronic components	≤ ±0.05 %[1]
Configuration	With setup program
Configurable parameters	Transmitter detection (max. 5-digit ID), transmission interval, radio frequency (only at 915 MHz)

Voltage supply

Lithium battery	Voltage: 3.6 V, rated capacity: 2.2 Ah for basic type 902930/10, 902930/12, and 902930/50; Voltage: 3.6 V, rated capacity: 1.7 Ah for basic type 902930/20, 902930/22, and 902930/60
Operating life	Approx. 1 year with the default values and at room temperature (a fast transmission interval and a high or low ambient temperature will reduce the operating life of the lithium battery)
Battery change	Only use the preconfigured lithium battery that is available in the accessories

Environmental influences

Ambient temperature range of the housing	-30 to +85 °C (housing including electronic components) For basic type 902930/10, 902930/12, and 902930/50; -25 to +125 °C (housing including electronic components) For basic type 902930/20, 902930/22, and 902930/60
Storage temperature range	-40 to +85 °C (housing including electronic components) For basic type 902930/10, 902930/12, and 902930/50; -40 to +125 °C (housing including electronic components) For basic type 902930/20, 902930/22, and 902930/60
Temperature influence	≤ ±0.0025 %[1]/K; per K deviation from the reference temperature 22 °C (±3 K) (housing)
Resistance to climatic conditions	Rel. humidity ≤ 95 % w/o condensation according to IEC 68-2-30
Vibration resistance	Max. 2 g at 10 to 2000 Hz (relating to the housing including electronic components) according to DIN IEC 60068-2-6
Admissible mechanical shock resistance	25 g/6 ms (relating to the housing including electronic components) according to DIN IEC 68-2.29 per 1000 cycles

[1] All accuracy specifications in % relating to the measuring range of 290 K or 800 K.

JUMO GmbH & Co. KG
Delivery address: Mackenrodtstraße 14
36039 Fulda, Germany
Postal address: 36035 Fulda, Germany
Phone: +49 661 6003-0
Fax: +49 661 6003-607
Email: mail@jumo.net
Internet: www.jumo.net

JUMO Instrument Co. Ltd.
JUMO House
Temple Bank, Riverway
Harlow, Essex CM 20 2DY, UK
Phone: +44 1279 63 55 33
Fax: +44 1279 62 50 29
Email: sales@jumo.co.uk
Internet: www.jumo.co.uk

JUMO Process Control, Inc.
6733 Myers Road
East Syracuse, NY 13057, USA
Phone: +1 315 437 5866
Fax: +1 315 437 5860
Email: info.us@jumo.net
Internet: www.jumousa.com

Electromagnetic compatibility (EMC) - Interference emission - Interference immunity - Radio frequency spectrum	DIN EN 61326-1 Class B - household and small businesses - Industrial requirements ETSI EN 300 220-1 and ETSI EN 300 220-2

Housing

Material	PEI (polyetherimide), color: black or gray
Flammability class	UL 94 HB
Dimensions	Diameter approx. 32 mm, length approx. 126 mm; for insertion lengths refer to order details
Protection type	IP67 according to DIN EN 60529 for basic type 902930/10, 902930/12, 902930/20, and 902930/22; for basic type 902930/50 and 902930/60 only with the screwed on machine connector M12 × 1
Installation position	Any
Weight	Approx. 120 g (without protection fitting)

Approvals / approval marks

Approval mark	Test facility	Certificates / certification numbers	Inspection basis	Valid for
c UL us	Underwriters Laboratories	E201387	UL 61010-1 CAN/CSA-C22.2 No. 61010-1	3.6 V, Basic type 902930/10 Basic type 902930/12 Basic type 902930/20 Basic type 902930/22 Basic type 902930/50 Basic type 902930/60
IC	Industry Canada	7472A-WTRANST01 7472A-WTRANST0102	RSS-210 Issue 7 RSS-210 Issue 8 RSS-GEN Issue 3 RSS-102 Issue 4	915 MHz, Basic type 902930/10 915 MHz, Basic type 902930/10 Basic type 902930/12 Basic type 902930/20 Basic type 902930/22 Basic type 902930/50 Basic type 902930/60
FCC	Federal Communications Commission	VT4-WTRANST01 VT4-WTRANST01-02	FCC Rule Part 15C FCC Rule Part 15C	915 MHz, Basic type 902930/10 915 MHz, Basic type 902930/10 Basic type 902930/12 Basic type 902930/20 Basic type 902930/22 Basic type 902930/50 Basic type 902930/60

JUMO GmbH & Co. KG
Delivery address: Mackenrodtstraße 14
36039 Fulda, Germany
Postal address: 36035 Fulda, Germany
Phone: +49 661 6003-0
Fax: +49 661 6003-607
Email: mail@jumo.net
Internet: www.jumo.net

JUMO Instrument Co. Ltd.
JUMO House
Temple Bank, Riverway
Harlow, Essex CM 20 2DY, UK
Phone: +44 1279 63 55 33
Fax: +44 1279 62 50 29
Email: sales@jumo.co.uk
Internet: www.jumo.co.uk

JUMO Process Control, Inc.
6733 Myers Road
East Syracuse, NY 13057, USA
Phone: +1 315 437 5866
Fax: +1 315 437 5860
Email: info.us@jumo.net
Internet: www.jumousa.com

Technical data

Basic type 902930/15, 902930/17, and 902930/55

Analog input

Measurement input	Pt1000 according to DIN EN 60751, in three-wire circuit
Operating temperature range	-30 to +260 °C
Accuracy of the temperature sensor	Class A ±(0.15 K + 0.002 × ItI) ItI = measured temperature in °C without prefix sign
Sensor line resistance	≤ 11 ohm per lead with 3-wire circuit
Sensor current	≤ 500 µA
Measuring circuit monitoring	Detection of probe break and probe short circuit

Output (wireless transmission)

Transmitter detection (transmitter ID)	Max. 5-digit ID, default setting, not configurable
Transmission interval	Adjustable via DIP switch to 5 s, 10 s, 20 s, or 45 s (default setting = 20 s)
Radio frequency	868.4 MHz (Europe)
Transmission power	< + 10 dBm
Open air range	300 m when using the antenna holder for wall mounting for the receiver and the 3 m antenna cable. When mounting the antenna directly to the receiver, a reduction in the range of approx. 40 % must be taken into account.
Output signal	882.2 to 1977.1 ohm = -30 to +260 °C
Response time of the complete probe	In water 0.4 m/s / in air 3.0 m/s Ø 4.0 mm: water $t_{0.5}$ approx. 3 s, $t_{0.9}$ approx. 7 s / air $t_{0.5}$ approx. 25 s, $t_{0.9}$ approx. 80 s Ø 6.0 mm: water $t_{0.5}$ approx. 4 s, $t_{0.9}$ approx. 10 s / air $t_{0.5}$ approx. 32 s, $t_{0.9}$ approx. 98 s
Calibration accuracy of the electronic components	≤ ±0.05 %[1]

Voltage supply

Lithium battery	Voltage: 3.6 V, rated capacity: 2.2 Ah
Operating life	Approx. 1 year with the default values and at room temperature (a fast transmission interval and a high or low ambient temperature will reduce the operating life of the lithium battery)
Battery change	Only use the preconfigured lithium battery that is available as an accessory (part no. 00525539)

Environmental influences

Ambient temperature range of the housing	-30 to +85 °C (housing including electronics components) If the operating temperature exceeds the max. ambient temperature, take into account the heat input of the protection fitting into the case. For detailed information, please refer to operating manual Wtrans T03 Ex in the chapter "Heat input by protection tube/protection fitting".
Storage temperature range	-40 to +85 °C (housing including electronic components)
Temperature influence	≤ ±0.0025 %[1]/K; per K deviation from the reference temperature 22 °C (±3 K) (housing)
Resistance to climatic conditions	Rel. humidity ≤ 95 % w/o condensation according to IEC 68-2-30
Vibration resistance	Max. 2 g at 10 to 2000 Hz (relating to the housing including electronic components) according to DIN IEC 60068-2-6
Admissible mechanical shock resistance	25 g/6 ms (relating to the housing including electronic components) according to DIN IEC 68-2.29 per 1000 cycles
Electromagnetic compatibility (EMC) - Interference emission - Interference immunity - Radio frequency spectrum	DIN EN 61326-1 Class B - household and small businesses - Industrial requirements ETSI EN 300 220-1 and ETSI EN 300 220-2

Housing

Material	Basic housing: PA 6, blue Housing cover: PA 6.6 ESD, black
Flammability class	UL 94 HB
Dimensions	Diameter approx. 32 mm, length approx. 126 mm; For insertion lengths refer to order details
Protection type	IP67 according to DIN EN 60529 for basic type 902930/15 and 902930/17; for basic type 902930/55 only with the screwed on M12 × 1 machine connector
Installation position	Any
Weight	Approx. 120 g (without protection fitting)

[1] All accuracy specifications in % relating to the measuring range of 290 K.

JUMO GmbH & Co. KG
Delivery address: Mackenrodtstraße 14
36039 Fulda, Germany
Postal address: 36035 Fulda, Germany
Phone: +49 661 6003-0
Fax: +49 661 6003-607
Email: mail@jumo.net
Internet: www.jumo.net

JUMO Instrument Co. Ltd.
JUMO House
Temple Bank, Riverway
Harlow, Essex CM 20 2DY, UK
Phone: +44 1279 63 55 33
Fax: +44 1279 62 50 29
Email: sales@jumo.co.uk
Internet: www.jumo.co.uk

JUMO Process Control, Inc.
6733 Myers Road
East Syracuse, NY 13057, USA
Phone: +1 315 437 5866
Fax: +1 315 437 5860
Email: info.us@jumo.net
Internet: www.jumousa.com

Ex identification marking

Zone	Identification marking
Use in zone 0 (20)	TÜV 16 ATEX 177609 X II 1 G Ex ia IIB T4 Ga II 1 D Ex ia IIIB T130 °C Da -30 °C ≤ Ta ≤ +85 °C
Use in zone 0 (20) / zone 1 (21) with zone separation by protection fitting	TÜV 16 ATEX 177609 X II 1/2 G Ex ia IIB T4 Ga/Gb II 1/2 D Ex ia IIIB T130 °C Da/Db -30 °C ≤ Ta ≤ +85 °C

Special conditions of use "X"

Take the capacities in the following table into account if the metallic protection tubes for the JUMO Wtrans T03 are not grounded.

Protection tube length	Protection tube diameter			
	2 mm	**> 2 to 4 mm**	**> 4 to 6 mm**	**> 6 to 9 mm**
0 to 100 mm	18.9 pF	25.5 pF	30.4 pF	36.3 pF
> 100 to 170 mm	32.1 pF	43.3 pF	51.6 pF	61.6 pF
> 170 to 270 mm	51.0 pF	68.8 pF	82.0 pF	97.9 pF
> 270 to 370 mm	69.9 pF	94.3 pF	112.4 pF	134.2 pF
> 370 to 570 mm	107.6 pF	145.3 pF	173.1 pF	206.7 pF
> 570 to 820 mm	154.8 pF	209.0 pF	249.0 pF	297.3 pF
> 820 to 1070 mm	202.0 pF	272.7 pF	324.9 pF	388.0 pF
> 1070 to 1570 mm	296.4 pF	400.2 pF	476.8 pF	569.3 pF
> 1570 to 2070 mm	390.8 pF	527.7 pF	628.6 pF	750.6 pF
> 2070 to 2570 mm	485.2 pF	655.1 pF	780.4 pF	931.9 pF

Protection tube length = insertion length (EL) + extension tube length (70 mm as standard); differing extension tube lengths must be taken into account

Only the preconfigured 3.6 V, 2.2 Ah lithium batteries available from the manufacturer as an accessory (part no. 00525539) may be used as replacement batteries.

Approvals / approval marks

Approval mark	Test facility	Certificates / certification numbers	Inspection basis	Valid for
Ex	TÜV NORD CERT GmbH	TÜV 16 ATEX 177609 X	EN 60079-0:2012 + A11:2013 EN 60079-11:2012 EN 60079-26:2015	868.4 MHz, Basic type 902930/15 Basic type 902930/17 Basic type 902930/55

JUMO GmbH & Co. KG
Delivery address: Mackenrodtstraße 14
36039 Fulda, Germany
Postal address: 36035 Fulda, Germany
Phone: +49 661 6003-0
Fax: +49 661 6003-607
Email: mail@jumo.net
Internet: www.jumo.net

JUMO Instrument Co. Ltd.
JUMO House
Temple Bank, Riverway
Harlow, Essex CM 20 2DY, UK
Phone: +44 1279 63 55 33
Fax: +44 1279 62 50 29
Email: sales@jumo.co.uk
Internet: www.jumo.co.uk

JUMO Process Control, Inc.
6733 Myers Road
East Syracuse, NY 13057, USA
Phone: +1 315 437 5866
Fax: +1 315 437 5860
Email: info.us@jumo.net
Internet: www.jumousa.com

Dimensions

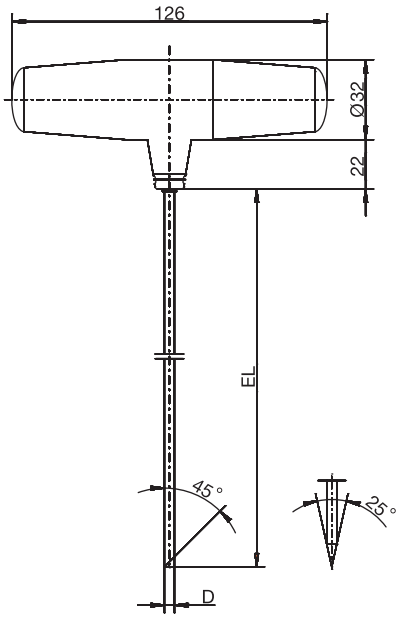

Basic type 902930/10
Basic type 902930/12
Basic type 902930/20
Basic type 902930/22

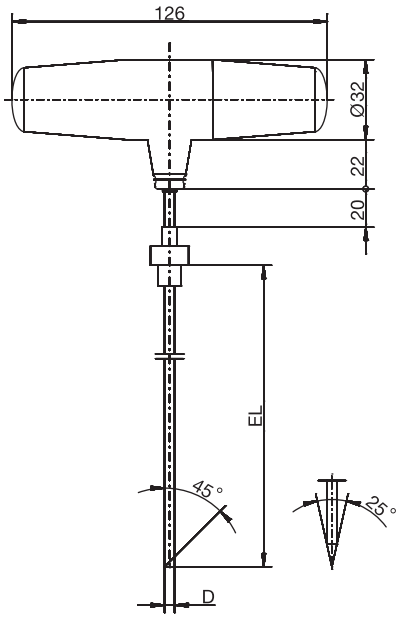

Basic type 902930/10
with process connection
Basic type 902930/12
with process connection
Basic type 902930/20
with process connection
Basic type 902930/22
with process connection

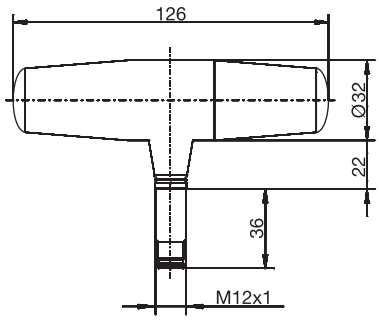

Basic type 902930/50
with M12 x 1 plug connection
Basic type 902930/60
with M12 x 1 plug connection

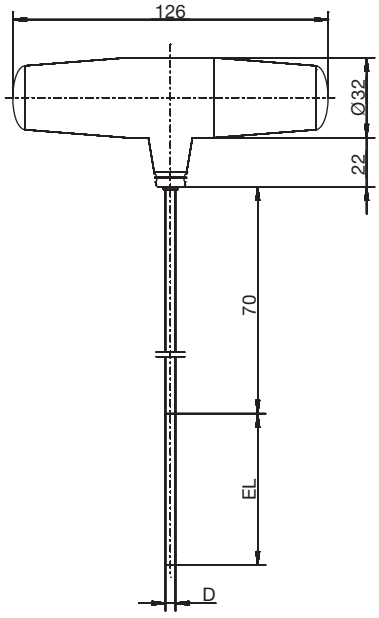

Basic type 902930/15
Basic type 902930/17

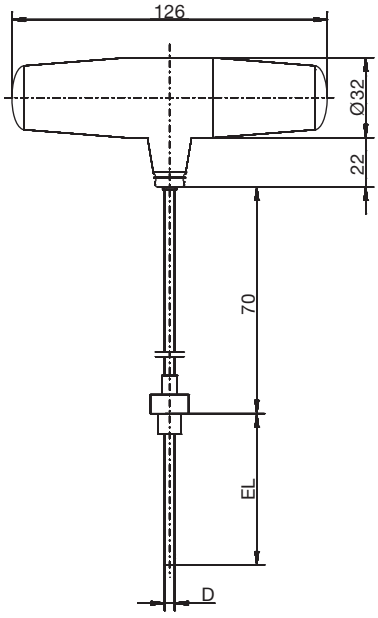

Basic type 902930/15
with process connection
Basic type 902930/17
with process connection

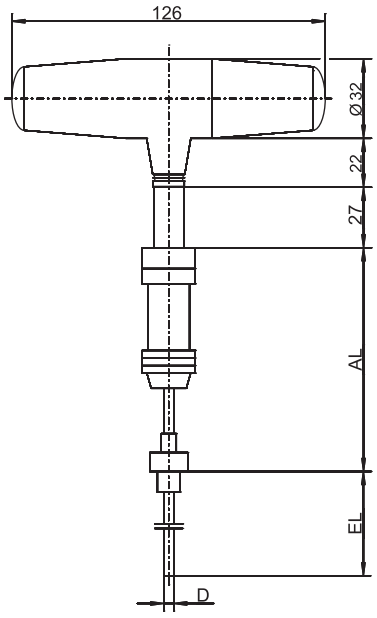

Basic type 902930/55
with M12 × 1 plug connection,
PTFE connecting cable
and process connection

JUMO GmbH & Co. KG
Delivery address: Mackenrodtstraße 14
36039 Fulda, Germany
Postal address: 36035 Fulda, Germany
Phone: +49 661 6003-0
Fax: +49 661 6003-607
Email: mail@jumo.net
Internet: www.jumo.net

JUMO Instrument Co. Ltd.
JUMO House
Temple Bank, Riverway
Harlow, Essex CM 20 2DY, UK
Phone: +44 1279 63 55 33
Fax: +44 1279 62 50 29
Email: sales@jumo.co.uk
Internet: www.jumo.co.uk

JUMO Process Control, Inc.
6733 Myers Road
East Syracuse, NY 13057, USA
Phone: +1 315 437 5866
Fax: +1 315 437 5860
Email: info.us@jumo.net
Internet: www.jumousa.com

Connection diagram

Machine connector M12 x 1, 4-pin according to IEC 60947-5-2

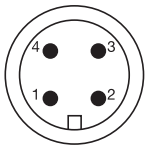

Electrical connection	Terminal assignment
Basic type 902930/50 and 902930/60	
RTD temperature probe in 3-wire circuit (input)	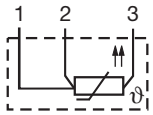

For a safe, interference-free device operation only connect shielded measuring inserts with shielded cables and connected shielding on both sides (shielding connected to protection tube and to M12 x 1 machine connector).

Setup program

The setup program allows transmitters without ATEX approval and receivers to be configured through a PC. The configuration data can be archived on data carriers and printed.
Configurable parameters include:
- Transmitter detection (transmitter ID)
- Transmission interval
- Radio frequency (for 915 MHz only)

The default settings are:
- Transmitter detection (transmitter ID), consecutive
- Transmission interval
- Radio frequency (868.4 MHz or 915.4 MHz)

The setup program can be used to overwrite changed parameters with the factory settings at any time.
The connection between transmitter and PC is established via a PC interface (USB/TTL converter).

For transmitters with ATEX approval, the user can only set the transmission interval via the DIP switch. All other parameters are default settings and cannot be adjusted.

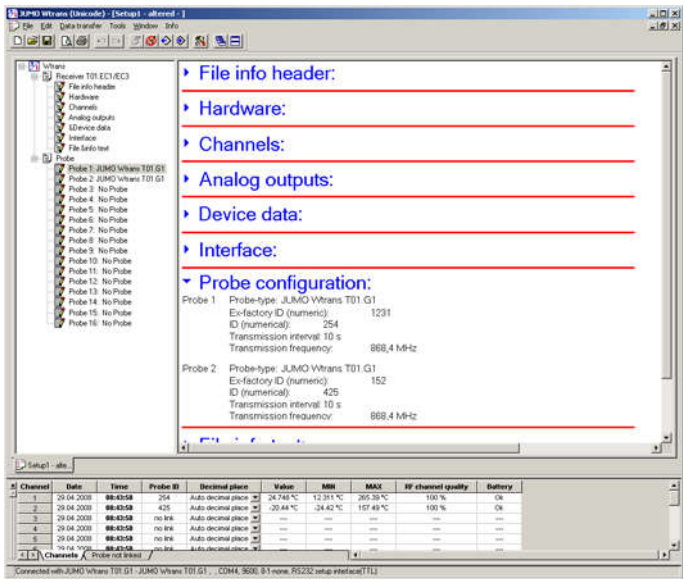

JUMO GmbH & Co. KG
Delivery address: Mackenrodtstraße 14
36039 Fulda, Germany
Postal address: 36035 Fulda, Germany
Phone: +49 661 6003-0
Fax: +49 661 6003-607
Email: mail@jumo.net
Internet: www.jumo.net

JUMO Instrument Co. Ltd.
JUMO House
Temple Bank, Riverway
Harlow, Essex CM 20 2DY, UK
Phone: +44 1279 63 55 33
Fax: +44 1279 62 50 29
Email: sales@jumo.co.uk
Internet: www.jumo.co.uk

JUMO Process Control, Inc.
6733 Myers Road
East Syracuse, NY 13057, USA
Phone: +1 315 437 5866
Fax: +1 315 437 5860
Email: info.us@jumo.net
Internet: www.jumousa.com

Order details: Wtrans T01.G1 insertion RTD temperature probe

		(1)	**Basic type**
	902930/10		Wtrans T01.G1 Insertion RTD temperature probe (Ambient temperature, housing: -30 to +85 °C)
		(2)	**Operating temperature in °C**
x	596		-30 to +260 °C
		(3)	**Measuring insert**
x	1006		1× Pt1000 in 3-wire circuit
		(4)	**Tolerance class according to DIN EN 60751**
x	2		Class A
		(5)	**Protection tube diameter D in mm**
x	2.5		Ø 4 mm stepped down to Ø 2.5 mm (particularly quick responding), available with flat and centered probe tip
x	4		Ø 4 mm
x	4.5		Ø 4.5 mm
x	6		Ø 6 mm
		(6)	**Insertion length EL in mm (EL 50 to 1000 mm)**
x	100		100 mm
x	150		150 mm
x	200		200 mm
x	. . .		For orders, specify in plain text (50 mm increments)
		(7)	**Insertion tip**
x	1		Flat
x	2		Concentric
x	3		Oblique
		(8)	**Radio frequency**
x	10		868.4 MHz (Europe)
x	20		915 MHz (America, Australia, Canada, and New Zealand)
		(9)	**Process connection**
x	000		Without
x	103		Screw connection G 3/8
x	104		Screw connection G 1/2
x	. . .		Other process connections upon request
		(10)	**Extra code**
x	000		Without
x	778		Customer-specific transmission interval, 1 to 3600 s; when ordering, specify in plain text (default setting 10 s)

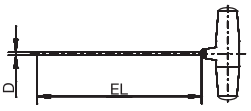

	(1)		(2)		(3)		(4)		(5)		(6)		(7)		(8)		(9)		(10)
Order code		-		-		-		-		-		-		-		-		/	
Order example	902930/10	-	596	-	1006	-	2	-	4	-	100	-	2	-	10	-	000	/	000

JUMO GmbH & Co. KG
Delivery address: Mackenrodtstraße 14
36039 Fulda, Germany
Postal address: 36035 Fulda, Germany
Phone: +49 661 6003-0
Fax: +49 661 6003-607
Email: mail@jumo.net
Internet: www.jumo.net

JUMO Instrument Co. Ltd.
JUMO House
Temple Bank, Riverway
Harlow, Essex CM 20 2DY, UK
Phone: +44 1279 63 55 33
Fax: +44 1279 62 50 29
Email: sales@jumo.co.uk
Internet: www.jumo.co.uk

JUMO Process Control, Inc.
6733 Myers Road
East Syracuse, NY 13057, USA
Phone: +1 315 437 5866
Fax: +1 315 437 5860
Email: info.us@jumo.net
Internet: www.jumousa.com

Scope of delivery

1 device in the ordered version
1 preconfigured lithium battery 3.6 V, 2.2 Ah (ambient temperature, housing: -30 to +85 °C)
4 color rings made of silicone (white, green, red, blue) for visual probe identification
1 operating manual

Accessories

	Part no.
Setup program on CD-ROM, multilingual	00488887
Setup program including OnlineChart on CD-ROM, multilingual	00549067
OnlineChart activation	00549188
Preconfigured lithium battery 3.6 V, 2.2 Ah (ambient temperature, housing: -30 to +85 °C)	00525539
Housing sealing set with axial gaskets made of EPDM (ethylene propylene diene rubber) (content: 3 pieces, white) and radial O-ring seals made of FPM (fluororubber) (content: 3 pieces, black)	00532794
Color rings made of silicone (white, green, red, blue) for visual transmitter identification	00489047
Color cap set made of PEI (polyetherimide) (content 10 pieces, gray) for visual transmitter identification	00525950
Color cap set made of PEI (polyetherimide) (content 10 pieces, brown) for visual transmitter identification	00525951
Color cap set made of PEI (polyetherimide) (content 10 pieces, green) for visual transmitter identification	00525952
Color cap set made of PEI (polyetherimide) (content 10 pieces, blue) for visual transmitter identification	00525953
PC interface with USB/TTL converter, adapter (socket), and adapter (pins)	00456352
Holder for wall mounting for Wtrans T with protection tube diameter 4 mm	00503317
Holder for wall mounting for Wtrans T with protection tube diameter 4.5 mm	00503326
Holder for wall mounting for Wtrans T with protection tube diameter 6 mm	00503328

Stock version

(1)		(2)		(3)		(4)		(5)		(6)		(7)		(8)		(9)		(10)	Part no.
902930/10	-	596	-	1006	-	2	-	4	-	100	-	2	-	10	-	000	/	000	00493668

JUMO GmbH & Co. KG
Delivery address: Mackenrodtstraße 14
36039 Fulda, Germany
Postal address: 36035 Fulda, Germany
Phone: +49 661 6003-0
Fax: +49 661 6003-607
Email: mail@jumo.net
Internet: www.jumo.net

JUMO Instrument Co. Ltd.
JUMO House
Temple Bank, Riverway
Harlow, Essex CM 20 2DY, UK
Phone: +44 1279 63 55 33
Fax: +44 1279 62 50 29
Email: sales@jumo.co.uk
Internet: www.jumo.co.uk

JUMO Process Control, Inc.
6733 Myers Road
East Syracuse, NY 13057, USA
Phone: +1 315 437 5866
Fax: +1 315 437 5860
Email: info.us@jumo.net
Internet: www.jumousa.com

Order details: Wtrans T01.G1 mineral-insulated RTD temperature probe

		(1)	**Basic type**
	902930/12		Wtrans T01.G1 Mineral-insulated RTD temperature probe with flexible protection tube (Ambient temperature, housing: -30 to +85 °C)
		(2)	**Operating temperature in °C**
x	415		-50 to +600 °C
		(3)	**Measuring insert**
x	1006		1× Pt1000 in 3-wire circuit
		(4)	**Tolerance class according to DIN EN 60751**
x	2		Class A
		(5)	**Protection tube diameter D in mm**
x	1.9		Ø 1.9 mm
x	3		Ø 3 mm
x	6		Ø 6 mm
		(6)	**Insertion length EL in mm (EL 100 to 10000 mm)**
x	100		100 mm
x	150		150 mm
x	. . .		For orders, specify in plain text (50 mm increments)
		(7)	**Insertion tip**
x	1		Flat
		(8)	**Radio frequency**
x	10		868.4 MHz (Europe)
x	20		915 MHz (America, Australia, Canada, and New Zealand)
		(9)	**Process connection**
x	000		Without
x	. . .		Other process connections upon request
		(10)	**Extra code**
x	000		Without
x	778		Customer-specific transmission interval, 1 to 3600 s; when ordering, specify in plain text (default setting 10 s)

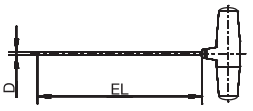

	(1)		(2)		(3)		(4)		(5)		(6)		(7)		(8)		(9)		(10)
Order code		-		-		-		-		-		-		-		-		/	
Order example	902930/12	-	415	-	1006	-	2	-	3	-	100	-	1	-	10	-	000	/	000

JUMO GmbH & Co. KG
Delivery address: Mackenrodtstraße 14
36039 Fulda, Germany
Postal address: 36035 Fulda, Germany
Phone: +49 661 6003-0
Fax: +49 661 6003-607
Email: mail@jumo.net
Internet: www.jumo.net

JUMO Instrument Co. Ltd.
JUMO House
Temple Bank, Riverway
Harlow, Essex CM 20 2DY, UK
Phone: +44 1279 63 55 33
Fax: +44 1279 62 50 29
Email: sales@jumo.co.uk
Internet: www.jumo.co.uk

JUMO Process Control, Inc.
6733 Myers Road
East Syracuse, NY 13057, USA
Phone: +1 315 437 5866
Fax: +1 315 437 5860
Email: info.us@jumo.net
Internet: www.jumousa.com

Scope of delivery

1 device in the ordered version
1 preconfigured lithium battery 3.6 V, 2.2 Ah (ambient temperature, housing: -30 to +85 °C)
4 color rings made of silicone (white, green, red, blue) for visual probe identification
1 operating manual

Accessories

	Part no.
Setup program on CD-ROM, multilingual	00488887
Setup program including OnlineChart on CD-ROM, multilingual	00549067
OnlineChart activation	00549188
Preconfigured lithium battery 3.6 V, 2.2 Ah (ambient temperature, housing: -30 to +85 °C)	00525539
Housing sealing set with axial gaskets made of EPDM (ethylene propylene diene rubber) (content: 3 pieces, white) and radial O-ring seals made of FPM (fluororubber) (content: 3 pieces, black)	00532794
Color rings made of silicone (white, green, red, blue) for visual transmitter identification	00489047
Color cap set made of PEI (polyetherimide) (content 10 pieces, gray) for visual transmitter identification	00525950
Color cap set made of PEI (polyetherimide) (content 10 pieces, brown) for visual transmitter identification	00525951
Color cap set made of PEI (polyetherimide) (content 10 pieces, green) for visual transmitter identification	00525952
Color cap set made of PEI (polyetherimide) (content 10 pieces, blue) for visual transmitter identification	00525953
PC interface with USB/TTL converter, adapter (socket), and adapter (pins)	00456352
Holder for wall mounting for Wtrans T with protection tube diameter 6 mm	00503328

JUMO GmbH & Co. KG
Delivery address: Mackenrodtstraße 14
36039 Fulda, Germany
Postal address: 36035 Fulda, Germany
Phone: +49 661 6003-0
Fax: +49 661 6003-607
Email: mail@jumo.net
Internet: www.jumo.net

JUMO Instrument Co. Ltd.
JUMO House
Temple Bank, Riverway
Harlow, Essex CM 20 2DY, UK
Phone: +44 1279 63 55 33
Fax: +44 1279 62 50 29
Email: sales@jumo.co.uk
Internet: www.jumo.co.uk

JUMO Process Control, Inc.
6733 Myers Road
East Syracuse, NY 13057, USA
Phone: +1 315 437 5866
Fax: +1 315 437 5860
Email: info.us@jumo.net
Internet: www.jumousa.com

Order details: Wtrans T03.G1 Ex insertion RTD temperature probe

		(1)	**Basic type**
	902930/15		Wtrans T03.G1 Ex Insertion RTD temperature probe with ATEX approval Intrinsically safe device according to ATEX directive (Ambient temperature, housing: -30 to +85 °C) Please specify the requirement for zone separation in plain text!
		(2)	**Operating temperature in °C (protection fitting)**
x	596		-30 to +260 °C
		(3)	**Measuring insert**
x	1006		1× Pt1000 in 3-wire circuit
		(4)	**Tolerance class according to DIN EN 60751**
x	2		Class A
		(5)	**Protection tube diameter D in mm**
x	4		Ø 4 mm
x	6		Ø 6 mm (zone separation possible)
x	9		Ø 9 mm (zone separation possible)
	. . .		Other protection tube diameters upon request
		(6)	**Insertion length EL in mm (EL 30 to 1000 mm)**
x	30		30 mm (take account of 70 mm extension tube length)
x	80		80 mm (take account of 70 mm extension tube length)
x	130		130 mm (take account of 70 mm extension tube length)
x	. . .		For orders, specify in plain text (50 mm increments)
		(7)	**Insertion tip**
x	1		Flat
		(8)	**Radio frequency**
x	10		868.4 MHz (Europe)
		(9)	**Process connection**
x	000		Without
x	103		Screw connection G 3/8 (zone separation possible)
x	104		Screw connection G 1/2 (zone separation possible)
x	. . .		Other process connections upon request
		(10)	**Extra code**
x	**362**		**Ex-protection Ex i according to ATEX directive 2014/34/EU**
x	778		Customer-specific transmission interval 5 s, 10 s, or 45 s; when ordering, please specify in plain text (default setting 20 s)



	(1)		(2)		(3)		(4)		(5)		(6)		(7)		(8)		(9)		(10)	
Order code		-		-		-		-		-		-		-		-		/	**362**	, ...[1]
Order example	902930/15	-	596	-	1006	-	2	-	6	-	80	-	1	-	10	-	000	/	362	

Important information:
The standard extension tube length (position 6) is 70 mm. Upon request, 120 mm can be ordered (when ordering specify in plain text).

The extension tube length is added to the selected insertion length. For the calculation of the heat input a temperature-dependent calculation basis is available for 70 mm and 120 mm extension tube lengths (see operating manual). There are restrictions on the design type of portable Wtrans T03 units due to the special conditions of use "X", which can be found in the operating manual.

[1] List extra codes in sequence, separated by commas.

JUMO GmbH & Co. KG
Delivery address: Mackenrodtstraße 14
36039 Fulda, Germany
Postal address: 36035 Fulda, Germany
Phone: +49 661 6003-0
Fax: +49 661 6003-607
Email: mail@jumo.net
Internet: www.jumo.net

JUMO Instrument Co. Ltd.
JUMO House
Temple Bank, Riverway
Harlow, Essex CM 20 2DY, UK
Phone: +44 1279 63 55 33
Fax: +44 1279 62 50 29
Email: sales@jumo.co.uk
Internet: www.jumo.co.uk

JUMO Process Control, Inc.
6733 Myers Road
East Syracuse, NY 13057, USA
Phone: +1 315 437 5866
Fax: +1 315 437 5860
Email: info.us@jumo.net
Internet: www.jumousa.com

Scope of delivery

1 device in the ordered version
1 preconfigured lithium battery 3.6 V, 2.2 Ah (ambient temperature, housing: -30 to +85 °C)
4 color rings made of silicone (white, green, red, blue) for visual probe identification
1 operating manual

Accessories

	Part no.
Preconfigured lithium battery 3.6 V, 2.2 Ah (ambient temperature, housing: -30 to +85 °C)	00525539
Housing sealing set with axial gaskets made of EPDM (ethylene propylene diene rubber) (content: 3 pieces, white) and radial O-ring seals made of FPM (fluororubber) (content: 3 pieces, black)	00532794
Color rings made of silicone (white, green, red, blue) for visual transmitter identification	00489047

JUMO GmbH & Co. KG
Delivery address: Mackenrodtstraße 14
36039 Fulda, Germany
Postal address: 36035 Fulda, Germany
Phone: +49 661 6003-0
Fax: +49 661 6003-607
Email: mail@jumo.net
Internet: www.jumo.net

JUMO Instrument Co. Ltd.
JUMO House
Temple Bank, Riverway
Harlow, Essex CM 20 2DY, UK
Phone: +44 1279 63 55 33
Fax: +44 1279 62 50 29
Email: sales@jumo.co.uk
Internet: www.jumo.co.uk

JUMO Process Control, Inc.
6733 Myers Road
East Syracuse, NY 13057, USA
Phone: +1 315 437 5866
Fax: +1 315 437 5860
Email: info.us@jumo.net
Internet: www.jumousa.com

Order details: Wtrans T03.G1 Ex mineral-insulated RTD temperature probe

		(1)	**Basic type**
	902930/17		Wtrans T03.G1 Ex Mineral-insulated RTD temperature probe with flexible protection tube and ATEX approval Intrinsically safe device according to ATEX directive (Ambient temperature, housing: -30 to +85 °C) For this basic type, no zone separation is possible!
		(2)	**Operating temperature in °C (protection fitting)**
x	596		-30 to +260 °C
		(3)	**Measuring insert**
x	1006		1× Pt1000 in 3-wire circuit
		(4)	**Tolerance class according to DIN EN 60751**
x	2		Class A
		(5)	**Protection tube diameter D in mm**
x	2		Ø 2 mm
x	3		Ø 3 mm
x	6		Ø 6 mm
		(6)	**Insertion length EL in mm (EL 30 to 10000 mm)**
x	30		30 mm (take account of 70 mm extension tube length)
x	80		80 mm (take account of 70 mm extension tube length)
x	130		130 mm (take account of 70 mm extension tube length)
x	. . .		For orders, specify in plain text (50 mm increments)
		(7)	**Insertion tip**
x	1		Flat
		(8)	**Radio frequency**
x	10		868.4 MHz (Europe)
		(9)	**Process connection**
x	000		Without
x	. . .		Other process connections upon request
		(10)	**Extra code**
x	**362**		**Ex-protection Ex i according to ATEX directive 2014/34/EU**
x	778		Customer-specific transmission interval 5 s, 10 s, or 45 s; when ordering, please specify in plain text (default setting 20 s)



	(1)		(2)		(3)		(4)		(5)		(6)		(7)		(8)		(9)		(10)	
Order code		-		-		-		-		-		-		-		-		/	**362**	, ...[1]
Order example	902930/17	-	596	-	1006	-	2	-	6	-	80	-	1	-	10	-	000	/	362	

Important information:
The standard extension tube length (position 6) is 70 mm. Upon request, 120 mm can be ordered (when ordering specify in plain text).

The extension tube length is added to the selected insertion length. For the calculation of the heat input a temperature-dependent calculation basis is available for 70 mm and 120 mm extension tube lengths (see operating manual).

[1] List extra codes in sequence, separated by commas.

JUMO GmbH & Co. KG
Delivery address: Mackenrodtstraße 14
36039 Fulda, Germany
Postal address: 36035 Fulda, Germany
Phone: +49 661 6003-0
Fax: +49 661 6003-607
Email: mail@jumo.net
Internet: www.jumo.net

JUMO Instrument Co. Ltd.
JUMO House
Temple Bank, Riverway
Harlow, Essex CM 20 2DY, UK
Phone: +44 1279 63 55 33
Fax: +44 1279 62 50 29
Email: sales@jumo.co.uk
Internet: www.jumo.co.uk

JUMO Process Control, Inc.
6733 Myers Road
East Syracuse, NY 13057, USA
Phone: +1 315 437 5866
Fax: +1 315 437 5860
Email: info.us@jumo.net
Internet: www.jumousa.com

Scope of delivery

1 device in the ordered version
1 preconfigured lithium battery 3.6 V, 2.2 Ah (ambient temperature, housing: -30 to +85 °C)
4 color rings made of silicone (white, green, red, blue) for visual probe identification
1 operating manual

Accessories

	Part no.
Preconfigured lithium battery 3.6 V, 2.2 Ah (ambient temperature, housing: -30 to +85 °C)	00525539
Housing sealing set with axial gaskets made of EPDM (ethylene propylene diene rubber) (content: 3 pieces, white) and radial O-ring seals made of FPM (fluororubber) (content: 3 pieces, black)	00532794
Color rings made of silicone (white, green, red, blue) for visual transmitter identification	00489047

JUMO GmbH & Co. KG
Delivery address: Mackenrodtstraße 14
36039 Fulda, Germany
Postal address: 36035 Fulda, Germany
Phone: +49 661 6003-0
Fax: +49 661 6003-607
Email: mail@jumo.net
Internet: www.jumo.net

JUMO Instrument Co. Ltd.
JUMO House
Temple Bank, Riverway
Harlow, Essex CM 20 2DY, UK
Phone: +44 1279 63 55 33
Fax: +44 1279 62 50 29
Email: sales@jumo.co.uk
Internet: www.jumo.co.uk

JUMO Process Control, Inc.
6733 Myers Road
East Syracuse, NY 13057, USA
Phone: +1 315 437 5866
Fax: +1 315 437 5860
Email: info.us@jumo.net
Internet: www.jumousa.com

Order details: Wtrans T02.G1 insertion RTD temperature probe

		(1)	**Basic type**
	902930/20		Wtrans T02.G1 Insertion RTD temperature probe (Ambient temperature, housing: -25 to +125 °C)
		(2)	**Operating temperature in °C**
x	596		-30 to +260 °C
		(3)	**Measuring insert**
x	1006		1× Pt1000 in 3-wire circuit
		(4)	**Tolerance class according to DIN EN 60751**
x	2		Class A
		(5)	**Protection tube diameter D in mm**
x	2.5		Ø 4 mm stepped down to Ø 2.5 mm (particularly quick responding), available with flat and centered probe tip
x	4		Ø 4 mm
x	4.5		Ø 4.5 mm
x	6		Ø 6 mm
		(6)	**Insertion length EL in mm (EL 50 to 1000 mm)**
x	100		100 mm
x	150		150 mm
x	200		200 mm
x	. . .		For orders, specify in plain text (50 mm increments)
		(7)	**Insertion tip**
x	1		Flat
x	2		Concentric
x	3		Oblique
		(8)	**Radio frequency**
x	10		868.4 MHz (Europe)
x	20		915 MHz (America, Australia, Canada, and New Zealand)
		(9)	**Process connection**
x	000		Without
x	103		Screw connection G 3/8
x	104		Screw connection G 1/2
x	. . .		Other process connections upon request
		(10)	**Extra code**
x	000		Without
x	778		Customer-specific transmission interval, 5 to 3600 s; when ordering, please specify in plain text (default setting 15 s)

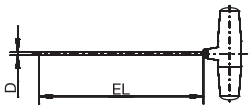

	(1)		(2)		(3)		(4)		(5)		(6)		(7)		(8)		(9)		(10)
Order code		-		-		-		-		-		-		-		-		/	
Order example	902930/20	-	596	-	1006	-	2	-	4	-	100	-	2	-	10	-	000	/	000

JUMO GmbH & Co. KG
Delivery address: Mackenrodtstraße 14
36039 Fulda, Germany
Postal address: 36035 Fulda, Germany
Phone: +49 661 6003-0
Fax: +49 661 6003-607
Email: mail@jumo.net
Internet: www.jumo.net

JUMO Instrument Co. Ltd.
JUMO House
Temple Bank, Riverway
Harlow, Essex CM 20 2DY, UK
Phone: +44 1279 63 55 33
Fax: +44 1279 62 50 29
Email: sales@jumo.co.uk
Internet: www.jumo.co.uk

JUMO Process Control, Inc.
6733 Myers Road
East Syracuse, NY 13057, USA
Phone: +1 315 437 5866
Fax: +1 315 437 5860
Email: info.us@jumo.net
Internet: www.jumousa.com

Scope of delivery

1 device in the ordered version
1 preconfigured lithium battery 3.6 V, 1.7 Ah (ambient temperature, housing: -25 to +125 °C)
4 color rings made of silicone (white, green, red, blue) for visual probe identification
1 operating manual

Accessories

	Part no.
Setup program on CD-ROM, multilingual	00488887
Setup program including OnlineChart on CD-ROM, multilingual	00549067
OnlineChart activation	00549188
Preconfigured lithium battery 3.6 V, 1.7 Ah (ambient temperature, housing: -25 to +125 °C)	00534690
Housing sealing set with axial gaskets made of EPDM (ethylene propylene diene rubber) (content: 3 pieces, white) and radial O-ring seals made of FPM (fluororubber) (content: 3 pieces, black)	00532794
Color rings made of silicone (white, green, red, blue) for visual transmitter identification	00489047
Color cap set made of PEI (polyetherimide) (content 10 pieces, gray) for visual transmitter identification	00525950
Color cap set made of PEI (polyetherimide) (content 10 pieces, brown) for visual transmitter identification	00525951
Color cap set made of PEI (polyetherimide) (content 10 pieces, green) for visual transmitter identification	00525952
Color cap set made of PEI (polyetherimide) (content 10 pieces, blue) for visual transmitter identification	00525953
PC interface with USB/TTL converter, adapter (socket), and adapter (pins)	00456352
Holder for wall mounting for Wtrans T with protection tube diameter 4 mm	00503317
Holder for wall mounting for Wtrans T with protection tube diameter 4.5 mm	00503326
Holder for wall mounting for Wtrans T with protection tube diameter 6 mm	00503328

Stock version

(1)		(2)		(3)		(4)		(5)		(6)		(7)		(8)		(9)		(10)	Part no.
902930/20	-	596	-	1006	-	2	-	4	-	100	-	2	-	10	-	000	/	000	00537803

JUMO GmbH & Co. KG
Delivery address: Mackenrodtstraße 14
36039 Fulda, Germany
Postal address: 36035 Fulda, Germany
Phone: +49 661 6003-0
Fax: +49 661 6003-607
Email: mail@jumo.net
Internet: www.jumo.net

JUMO Instrument Co. Ltd.
JUMO House
Temple Bank, Riverway
Harlow, Essex CM 20 2DY, UK
Phone: +44 1279 63 55 33
Fax: +44 1279 62 50 29
Email: sales@jumo.co.uk
Internet: www.jumo.co.uk

JUMO Process Control, Inc.
6733 Myers Road
East Syracuse, NY 13057, USA
Phone: +1 315 437 5866
Fax: +1 315 437 5860
Email: info.us@jumo.net
Internet: www.jumousa.com

Order details: Wtrans T02.G1 mineral-insulated RTD temperature probe

		(1)	**Basic type**
	902930/22		Wtrans T02.G1 Mineral-insulated RTD temperature probe with flexible protection tube (Ambient temperature, housing: -25 to +125 °C)
		(2)	**Operating temperature in °C**
x	415		-50 to +600 °C
		(3)	**Measuring insert**
x	1006		1× Pt1000 in 3-wire circuit
		(4)	**Tolerance class according to DIN EN 60751**
x	2		Class A
		(5)	**Protection tube diameter D in mm**
x	1.9		Ø 1.9 mm
x	3		Ø 3 mm
x	6		Ø 6 mm
		(6)	**Insertion length EL in mm (EL 100 to 10000 mm)**
x	100		100 mm
x	150		150 mm
x	. . .		For orders, specify in plain text (50 mm increments)
		(7)	**Insertion tip**
x	1		Flat
		(8)	**Radio frequency**
x	10		868.4 MHz (Europe)
x	20		915 MHz (America, Australia, Canada, and New Zealand)
		(9)	**Process connection**
x	000		Without
x	. . .		Other process connections upon request
		(10)	**Extra code**
x	000		Without
x	778		Customer-specific transmission interval, 5 to 3600 s; when ordering, please specify in plain text (default setting 15 s)

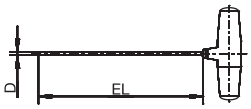

	(1)		(2)		(3)		(4)		(5)		(6)		(7)		(8)		(9)		(10)
Order code		-		-		-		-		-		-		-		-		/	
Order example	902930/22	-	415	-	1006	-	2	-	3	-	100	-	1	-	10	-	000	/	000

JUMO GmbH & Co. KG
Delivery address: Mackenrodtstraße 14
36039 Fulda, Germany
Postal address: 36035 Fulda, Germany
Phone: +49 661 6003-0
Fax: +49 661 6003-607
Email: mail@jumo.net
Internet: www.jumo.net

JUMO Instrument Co. Ltd.
JUMO House
Temple Bank, Riverway
Harlow, Essex CM 20 2DY, UK
Phone: +44 1279 63 55 33
Fax: +44 1279 62 50 29
Email: sales@jumo.co.uk
Internet: www.jumo.co.uk

JUMO Process Control, Inc.
6733 Myers Road
East Syracuse, NY 13057, USA
Phone: +1 315 437 5866
Fax: +1 315 437 5860
Email: info.us@jumo.net
Internet: www.jumousa.com

Scope of delivery

1 device in the ordered version
1 preconfigured lithium battery 3.6 V, 1.7 Ah (ambient temperature, housing: -25 to +125 °C)
4 color rings made of silicone (white, green, red, blue) for visual probe identification
1 operating manual

Accessories

	Part no.
Setup program on CD-ROM, multilingual	00488887
Setup program including OnlineChart on CD-ROM, multilingual	00549067
OnlineChart activation	00549188
Preconfigured lithium battery 3.6 V, 1.7 Ah (ambient temperature, housing: -25 to +125 °C)	00534690
Housing sealing set with axial gaskets made of EPDM (ethylene propylene diene rubber) (content: 3 pieces, white) and radial O-ring seals made of FPM (fluororubber) (content: 3 pieces, black)	00532794
Color rings made of silicone (white, green, red, blue) for visual transmitter identification	00489047
Color cap set made of PEI (polyetherimide) (content 10 pieces, gray) for visual transmitter identification	00525950
Color cap set made of PEI (polyetherimide) (content 10 pieces, brown) for visual transmitter identification	00525951
Color cap set made of PEI (polyetherimide) (content 10 pieces, green) for visual transmitter identification	00525952
Color cap set made of PEI (polyetherimide) (content 10 pieces, blue) for visual transmitter identification	00525953
PC interface with USB/TTL converter, adapter (socket), and adapter (pins)	00456352
Holder for wall mounting for Wtrans T with protection tube diameter 6 mm	00503328

JUMO GmbH & Co. KG
Delivery address: Mackenrodtstraße 14
36039 Fulda, Germany
Postal address: 36035 Fulda, Germany
Phone: +49 661 6003-0
Fax: +49 661 6003-607
Email: mail@jumo.net
Internet: www.jumo.net

JUMO Instrument Co. Ltd.
JUMO House
Temple Bank, Riverway
Harlow, Essex CM 20 2DY, UK
Phone: +44 1279 63 55 33
Fax: +44 1279 62 50 29
Email: sales@jumo.co.uk
Internet: www.jumo.co.uk

JUMO Process Control, Inc.
6733 Myers Road
East Syracuse, NY 13057, USA
Phone: +1 315 437 5866
Fax: +1 315 437 5860
Email: info.us@jumo.net
Internet: www.jumousa.com

Order details: Wtrans T01.G2 with M12 × 1 plug connection

		(1)	**Basic type**
	902930/50		Wtrans T01.G2 with M12 × 1 plug connection For RTD temperature probes (Ambient temperature, housing: -30 to +85 °C)
		(2)	**Operating temperature in °C**
x	150		-200 to +600 °C
		(3)	**Measurement input**
x	1006		1× Pt1000 in 3-wire circuit
		(4)	**Tolerance class according to DIN EN 60751**
x	0		Without (not relevant)
		(5)	**Protection tube diameter D in mm**
x	0		Without (not relevant)
		(6)	**Insertion length EL in mm**
x	000		Without (not relevant)
		(7)	**Insertion tip**
x	0		Without (not relevant)
		(8)	**Radio frequency**
x	10		868.4 MHz (Europe)
x	20		915 MHz (America, Australia, Canada, and New Zealand)
		(9)	**Process connection**
x	000		Without (not relevant)
		(10)	**Extra code**
x	000		Without
x	778		Customer-specific transmission interval, 1 to 3600 s; when ordering, specify in plain text (default setting 10 s)

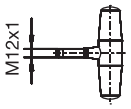

	(1)		(2)		(3)		(4)		(5)		(6)		(7)		(8)		(9)		(10)
Order code		-		-		-		-		-		-		-		-		/	
Order example	902930/50	-	150	-	1006	-	0	-	0	-	000	-	0	-	10	-	000	/	000

JUMO GmbH & Co. KG
Delivery address: Mackenrodtstraße 14
36039 Fulda, Germany
Postal address: 36035 Fulda, Germany
Phone: +49 661 6003-0
Fax: +49 661 6003-607
Email: mail@jumo.net
Internet: www.jumo.net

JUMO Instrument Co. Ltd.
JUMO House
Temple Bank, Riverway
Harlow, Essex CM 20 2DY, UK
Phone: +44 1279 63 55 33
Fax: +44 1279 62 50 29
Email: sales@jumo.co.uk
Internet: www.jumo.co.uk

JUMO Process Control, Inc.
6733 Myers Road
East Syracuse, NY 13057, USA
Phone: +1 315 437 5866
Fax: +1 315 437 5860
Email: info.us@jumo.net
Internet: www.jumousa.com

Scope of delivery

1 device in the ordered version
1 preconfigured lithium battery 3.6 V, 2.2 Ah (ambient temperature, housing: -30 to +85 °C)
4 color rings made of silicone (white, green, red, blue) for visual probe identification
1 operating manual

Accessories

	Part no.
Setup program on CD-ROM, multilingual	00488887
Setup program including OnlineChart on CD-ROM, multilingual	00549067
OnlineChart activation	00549188
Preconfigured lithium battery 3.6 V, 2.2 Ah (ambient temperature, housing: -30 to +85 °C)	00525539
Housing sealing set with axial gaskets made of EPDM (ethylene propylene diene rubber) (content: 3 pieces, white) and radial O-ring seals made of FPM (fluororubber) (content: 3 pieces, black)	00532794
Color rings made of silicone (white, green, red, blue) for visual transmitter identification	00489047
Color cap set made of PEI (polyetherimide) (content 10 pieces, gray) for visual transmitter identification	00525950
Color cap set made of PEI (polyetherimide) (content 10 pieces, brown) for visual transmitter identification	00525951
Color cap set made of PEI (polyetherimide) (content 10 pieces, green) for visual transmitter identification	00525952
Color cap set made of PEI (polyetherimide) (content 10 pieces, blue) for visual transmitter identification	00525953
PC interface with USB/TTL converter, adapter (socket), and adapter (pins)	00456352
Holder for wall mounting for Wtrans T with M12 × 1 plug connection	00503329
Machine connector M12 × 1, 4-pin according to IEC 60947-5-2	00506319
Push-in RTD temperature probe with Pt1000 temperature sensor and machine connector M12 × 1	
902150/30-386-1006-2-6-100-56-2500/315, 317 Protection tube diameter 6 mm, insertion length 100 mm, connecting cable length 2500 mm	00514417
902150/30-386-1006-2-6-200-56-2500/315, 317 Protection tube diameter 6 mm, insertion length 200 mm, connecting cable length 2500 mm	00514440

Note: for compression fittings and flanges refer to data sheet 909750

Stock version

(1)		(2)		(3)		(4)		(5)		(6)		(7)		(8)		(9)		(10)	Part no.
902930/50	-	150	-	1006	-	0	-	0	-	000	-	0	-	10	-	000	/	000	00506791

JUMO GmbH & Co. KG
Delivery address: Mackenrodtstraße 14
36039 Fulda, Germany
Postal address: 36035 Fulda, Germany
Phone: +49 661 6003-0
Fax: +49 661 6003-607
Email: mail@jumo.net
Internet: www.jumo.net

JUMO Instrument Co. Ltd.
JUMO House
Temple Bank, Riverway
Harlow, Essex CM 20 2DY, UK
Phone: +44 1279 63 55 33
Fax: +44 1279 62 50 29
Email: sales@jumo.co.uk
Internet: www.jumo.co.uk

JUMO Process Control, Inc.
6733 Myers Road
East Syracuse, NY 13057, USA
Phone: +1 315 437 5866
Fax: +1 315 437 5860
Email: info.us@jumo.net
Internet: www.jumousa.com

Order details: Wtrans T03.G2 Ex with M12 × 1 plug connection

		(1)	**Basic type**
	902930/55		Wtrans T03.G2 Ex with M12 × 1 plug connection and RTD temperature probe with PTFE connecting cable and ATEX approval Intrinsically safe device according to ATEX directive (Ambient temperature, housing: -30 to +85 °C) Please specify the requirement for zone separation in plain text!
		(2)	**Operating temperature in °C (protection fitting)**
x	596		-30 to +260 °C
		(3)	**Measurement input**
x	1006		1× Pt1000 in 3-wire circuit
		(4)	**Tolerance class according to DIN EN 60751**
x	2		Class A
		(5)	**Protection tube diameter D in mm**
x	4		Ø 4 mm
x	6		Ø 6 mm (zone separation possible)
x	9		Ø 9 mm (zone separation possible)
		(6)	**Insertion length EL in mm (EL 100 to 1000 mm)**
x	100		100 mm
x	150		150 mm
x	200		200 mm
x	. . .		For orders, specify in plain text (50 mm increments)
		(7)	**Insertion tip**
x	1		Flat
		(8)	**Radio frequency**
x	10		868.4 MHz (Europe)
		(9)	**Process connection**
x	000		Without
x	103		Screw connection G 3/8 (zone separation possible)
x	104		Screw connection G 1/2 (zone separation possible)
		(10)	**Extra code**
x	**362**		**Ex-protection Ex i according to ATEX directive 2014/34/EU**
x	778		Customer-specific transmission interval 5 s, 10 s, or 45 s; when ordering, please specify in plain text (default setting 20 s)

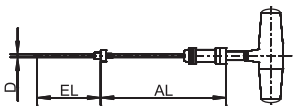

	(1)		(2)		(3)		(4)		(5)		(6)		(7)		(8)		(9)		(10)	
Order code		-		-		-		-		-		-		-		-		/	**362**	, ...[1]
Order example	902930/55	-	596	-	1006	-	2	-	6	-	150	-	1	-	10	-	000	/	362	

Important information:
When ordering, specify the PTFE connecting cable length (AL) in plain text!
Only use basic type 902930/55 with the corresponding JUMO RTD temperature probes with PTFE connecting cable.
The design type of the JUMO RTD temperature probes is to be discussed when ordering.

[1] List extra codes in sequence, separated by commas.

JUMO GmbH & Co. KG
Delivery address: Mackenrodtstraße 14
36039 Fulda, Germany
Postal address: 36035 Fulda, Germany
Phone: +49 661 6003-0
Fax: +49 661 6003-607
Email: mail@jumo.net
Internet: www.jumo.net

JUMO Instrument Co. Ltd.
JUMO House
Temple Bank, Riverway
Harlow, Essex CM 20 2DY, UK
Phone: +44 1279 63 55 33
Fax: +44 1279 62 50 29
Email: sales@jumo.co.uk
Internet: www.jumo.co.uk

JUMO Process Control, Inc.
6733 Myers Road
East Syracuse, NY 13057, USA
Phone: +1 315 437 5866
Fax: +1 315 437 5860
Email: info.us@jumo.net
Internet: www.jumousa.com

Scope of delivery

1 device in the ordered version
1 preconfigured lithium battery 3.6 V, 2.2 Ah (ambient temperature, housing: -30 to +85 °C)
4 color rings made of silicone (white, green, red, blue) for visual probe identification
1 operating manual

Accessories

	Part no.
Preconfigured lithium battery 3.6 V, 2.2 Ah (ambient temperature, housing: -30 to +85 °C)	00525539
Housing sealing set with axial gaskets made of EPDM (ethylene propylene diene rubber) (content: 3 pieces, white) and radial O-ring seals made of FPM (fluororubber) (content: 3 pieces, black)	00532794
Color rings made of silicone (white, green, red, blue) for visual transmitter identification	00489047

JUMO GmbH & Co. KG
Delivery address: Mackenrodtstraße 14
36039 Fulda, Germany
Postal address: 36035 Fulda, Germany
Phone: +49 661 6003-0
Fax: +49 661 6003-607
Email: mail@jumo.net
Internet: www.jumo.net

JUMO Instrument Co. Ltd.
JUMO House
Temple Bank, Riverway
Harlow, Essex CM 20 2DY, UK
Phone: +44 1279 63 55 33
Fax: +44 1279 62 50 29
Email: sales@jumo.co.uk
Internet: www.jumo.co.uk

JUMO Process Control, Inc.
6733 Myers Road
East Syracuse, NY 13057, USA
Phone: +1 315 437 5866
Fax: +1 315 437 5860
Email: info.us@jumo.net
Internet: www.jumousa.com

Order details: Wtrans T02.G2 with M12 × 1 plug connection

		(1)	**Basic type**
	902930/60		Wtrans T02.G2 with M12 × 1 plug connection for RTD temperature probes (Ambient temperature, housing: -25 to +125 °C)
		(2)	**Operating temperature in °C**
x	150		-200 to +600 °C
		(3)	**Measurement input**
x	1006		1× Pt1000 in 3-wire circuit
		(4)	**Tolerance class according to DIN EN 60751**
x	0		Without (not relevant)
		(5)	**Protection tube diameter D in mm**
x	0		Without (not relevant)
		(6)	**Insertion length EL in mm**
x	000		Without (not relevant)
		(7)	**Insertion tip**
x	0		Without (not relevant)
		(8)	**Radio frequency**
x	10		868.4 MHz (Europe)
x	20		915 MHz (America, Australia, Canada, and New Zealand)
		(9)	**Process connection**
x	000		Without (not relevant)
		(10)	**Extra code**
x	000		Without
x	778		Customer-specific transmission interval, 5 to 3600 s; when ordering, please specify in plain text (default setting 15 s)

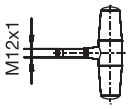

	(1)		(2)		(3)		(4)		(5)		(6)		(7)		(8)		(9)		(10)
Order code		-		-		-		-		-		-		-		-		/	
Order example	902930/60	-	150	-	1006	-	0	-	0	-	000	-	0	-	10	-	000	/	000

JUMO GmbH & Co. KG
Delivery address: Mackenrodtstraße 14
36039 Fulda, Germany
Postal address: 36035 Fulda, Germany
Phone: +49 661 6003-0
Fax: +49 661 6003-607
Email: mail@jumo.net
Internet: www.jumo.net

JUMO Instrument Co. Ltd.
JUMO House
Temple Bank, Riverway
Harlow, Essex CM 20 2DY, UK
Phone: +44 1279 63 55 33
Fax: +44 1279 62 50 29
Email: sales@jumo.co.uk
Internet: www.jumo.co.uk

JUMO Process Control, Inc.
6733 Myers Road
East Syracuse, NY 13057, USA
Phone: +1 315 437 5866
Fax: +1 315 437 5860
Email: info.us@jumo.net
Internet: www.jumousa.com

Scope of delivery

1 device in the ordered version
1 preconfigured lithium battery 3.6 V, 1.7 Ah (ambient temperature, housing: -25 to +125 °C)
4 color rings made of silicone (white, green, red, blue) for visual probe identification
1 operating manual

Accessories

	Part no.
Setup program on CD-ROM, multilingual	00488887
Setup program including OnlineChart on CD-ROM, multilingual	00549067
OnlineChart activation	00549188
Preconfigured lithium battery 3.6 V, 1.7 Ah (ambient temperature, housing: -25 to +125 °C)	00534690
Housing sealing set with axial gaskets made of EPDM (ethylene propylene diene rubber) (content: 3 pieces, white) and radial O-ring seals made of FPM (fluororubber) (content: 3 pieces, black)	00532794
Color rings made of silicone (white, green, red, blue) for visual transmitter identification	00489047
Color cap set made of PEI (polyetherimide) (content 10 pieces, gray) for visual transmitter identification	00525950
Color cap set made of PEI (polyetherimide) (content 10 pieces, brown) for visual transmitter identification	00525951
Color cap set made of PEI (polyetherimide) (content 10 pieces, green) for visual transmitter identification	00525952
Color cap set made of PEI (polyetherimide) (content 10 pieces, blue) for visual transmitter identification	00525953
PC interface with USB/TTL converter, adapter (socket), and adapter (pins)	00456352
Holder for wall mounting for Wtrans T with M12 × 1 plug connection	00503329
Machine connector M12 × 1, 4-pin according to IEC 60947-5-2	00506319
Push-in RTD temperature probe with Pt1000 temperature sensor and machine connector M12 × 1	
902150/30-386-1006-2-6-100-56-2500/315, 317 Protection tube diameter 6 mm, insertion length 100 mm, connecting cable length 2500 mm	00514417
902150/30-386-1006-2-6-200-56-2500/315, 317 Protection tube diameter 6 mm, insertion length 200 mm, connecting cable length 2500 mm	00514440

Note: for compression fittings and flanges refer to data sheet 909750

Stock version

(1)		(2)		(3)		(4)		(5)		(6)		(7)		(8)		(9)		(10)	Part no.
902930/60	-	150	-	1006	-	0	-	0	-	000	-	0	-	10	-	000	/	000	00537805