Brand of NTN corporation

Technical data

EXFE212

Bearing units



Grey cast housing, radial insert ball bearing with eccentric locking collar, seal with slinger

KIT CONTENT

EX212G2, FE212

VISUAL (S)

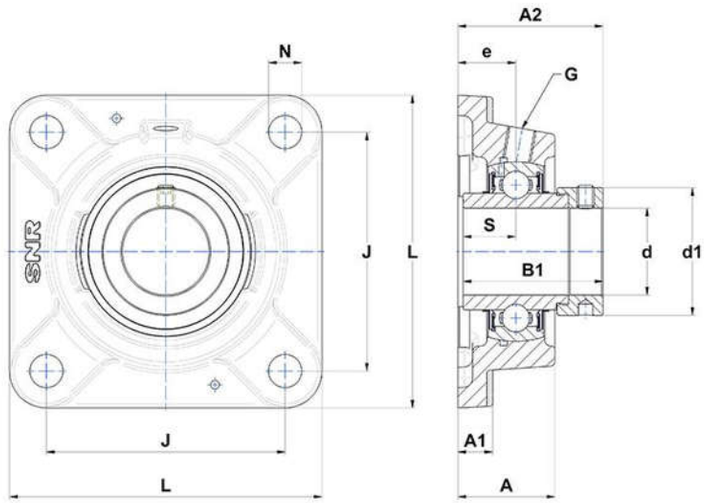

PRODUCT DEFINITION

Brand	SNR
A - Housing height	53,5 mm
A1 - Housing foot height / flange height	16 mm
A2 - Total height from mounting surface	80,8 mm
B - Width of Inner Ring	61,8 mm
B1 - Overall width Inner Ring	77,7 mm

PRODUCT DEFINITION	
d - Shaft diameter	60 mm
d1 - Outer dia of eccent. Lock. collar / nut of adapter sleeve	82 mm
e - Distance mounting surface to bearing center	34 mm
G - Grease fitting	R1/8"
J - Mounting holes distance	143 mm
L - Housing width / diameter	175 mm
N - Mounting hole dimension	18 mm
S - Distance front side/bearing centre	30,9 mm

PRODUCT PERFORMANCE	
C - Dynamic load rating	52500000 mN
C0 - Static load rating	32800000 mN
Operating temperature min.	253,15 °K
Operating temperature max.	373,15 °K

OTHER FEATURES	
Mass	5,2 kg
Recommended tightening torque for set screw	22 N-m