NE-18 Series
Mains / Power Switches

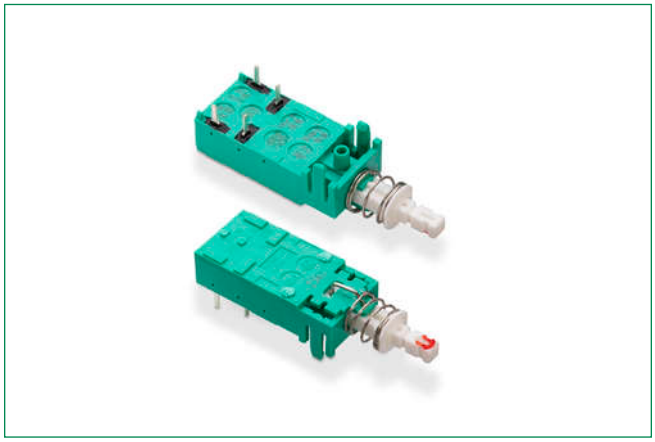

Agency Approvals

Agency	Agency File Number
c UL us	E42363

Specifications

Electrical Rating	NE18 Series: 8A GP, 125 VAC, 50/60 Hz, 1E4, T70 6A GP, 250 VAC, 50/60 Hz, 1E4, T70 6(4)A RM, 250 VAC, 50/60 Hz, 1E4, T70 6/48A RC, 250 VAC, 50/60 Hz, 1E4, T70 1RA, 100 VDC, 1E4, T70 8RA, 30VDC, 1E4, T70 NE18CTII Series: 4A GP, 250 VAC, 50/60 Hz, 1E4, T70 4/48A RC, 250 VAC, 50/60 Hz, 1E4, T70 1RA, 100 VDC, 1E4, T70 4RA, 30VDC, 1E4, T70
Dielectric Strength (50 Hz, 1 min.)	2,000 V
Operating Life at Max. Load and at Max. Inrush Current	$\geq 10^4$ operations[5]
Contact Resistance	Initial: 50mΩ; After 10^4 operations: 70mΩ.
Insulation Resistance	$\geq 10^{12}$ Ω chassis – nearest contact; $\geq 10^{12}$ Ω mains contact – mains contact; $\geq 10^{12}$ Ω mains contact – mains contact after 10^4 operations.
Low Voltage Contact	-
Switching Power Max.	12W
Switching Voltage Max.	24V
Switching Current Max.	0.5A
Total Travel	4.7mm (0.185 inch)
Latching Travel	3.3mm (0.130 inch)
Operating Force	Without auxiliary low voltage contacts: NE18: 7N (700 grams); NE18CTII: 9.5N (950 grams). With auxiliary low voltage contacts: NE18: 8N (800 grams); NE18CTII:11N (1100 grams)
Sealing	Dust Proof

Description

The NE-18 series of mains/power switches were designed with consumer electronics and audio equipment in mind. Developers choose reliable NE-18 switches for their innovative product designs because of the wide variety of buttons and contact configurations available and the ability to select either a chassis or panel mount.

Features & Benefits

- Chassis or panel mount
- Various buttons
- Various contact configurations
- RoHS compliant

Applications

- Mains/power switching
- Consumer electronics
- Audio equipment
- Digital products

Materials

Housing, Actuator & Terminal Board	Thermoplastic polyester (UL 94V-0).
Movable Contact	Silver nickel alloy, silver plated.
Fixed Contacts	
Common Contacts & Terminals	Copper alloy, silver plated.
Return Spring	Music Wire

Notes:
1. All models are RoHS compliant and compatible. Specifications and materials listed above are for switches with standard options. For information on specific and custom switches, consult Customer Service Center.
2. CSA and UL operating life 6000 operations.

© 2025 Littelfuse, Inc.
Specifications are subject to change without notice.
Revised: VL 04/01/25

NE-18 Series
Mains / Power Switches

Ordering Number

To order, simply select desired option from each category and place in the appropriate box. For additional options not shown in catalog, consult Customer Service Center. If requesting only a switch, select the switch as noted below. Buttons are sold separately.

XXX - X - X - X - X

Designation
NE18: NE18
ZNE18: Central mounted NE18

Contact Arrangement
NE18 code # - see list

Mechanical Function
OA: Momentary
EE: Alternate (push-push)

Single Station Chassis
01: With 0.094 mounting holes
(None): No chassis
02: With 4-40 tapped mounting holes
03: Special chassis (consult factory)

Dress Nut[1]
(None): No dress nut
B: Black
C: Chrome

Notes:
1. Central mounted ZNE18 series only

Order Code - Buttons

Solid Buttons

XXX - X

Style
F01: FMR
F02: FG[1]
F12: FSC
F13: FSD
F14: FU12
F15: FSB
F16: FE
F19: FA
F21: F001

Button Color
01: Black
02: White
03: Red
04: Light gray

Mechanical Indicator Buttons

XXX - X - X - X

Style
F01: FA100
F02: FA101
F07: FA120
F08: FA201
F11: FA200[1]

Shell Color
01: Black

Out Position Color
01: Black

In Position Color
02: White
06: Yellow
07: Blue
08: Green
12: Orange

Notes:
1. Button options for central mounting configurations, use 'FG' for central mount with chrome dress nut, use 'FA200' for central mount with black dress nut.

Button Removal

A button of a push-push switch should only be removed in the "OFF" non-latching position.

Designation & Switches with Standard Options

NE1838EE

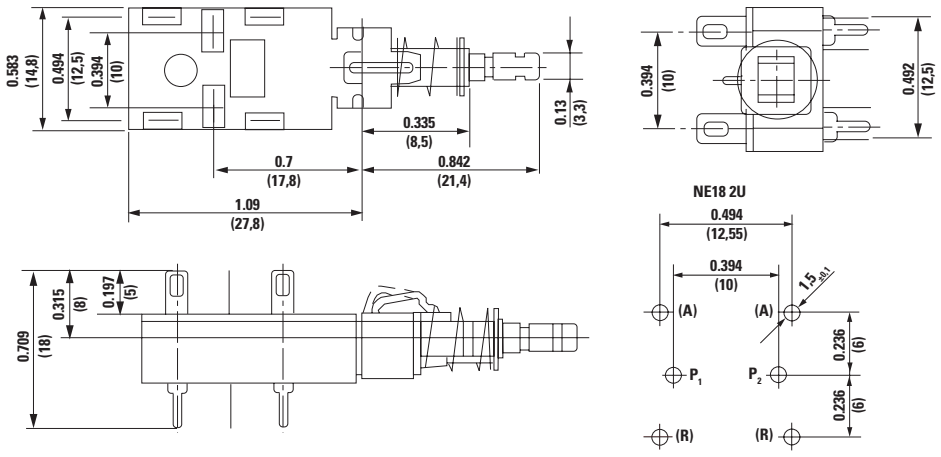

© 2025 Littelfuse, Inc.
Specifications are subject to change without notice.
Revised: VL 04/01/25

NE-18 Series
Mains / Power Switches

NE1839EE

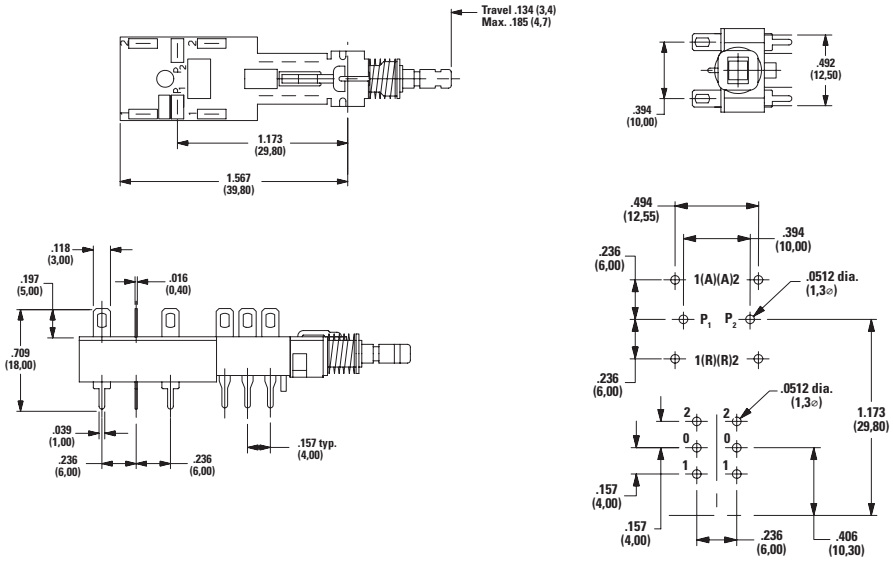

NE1846EE

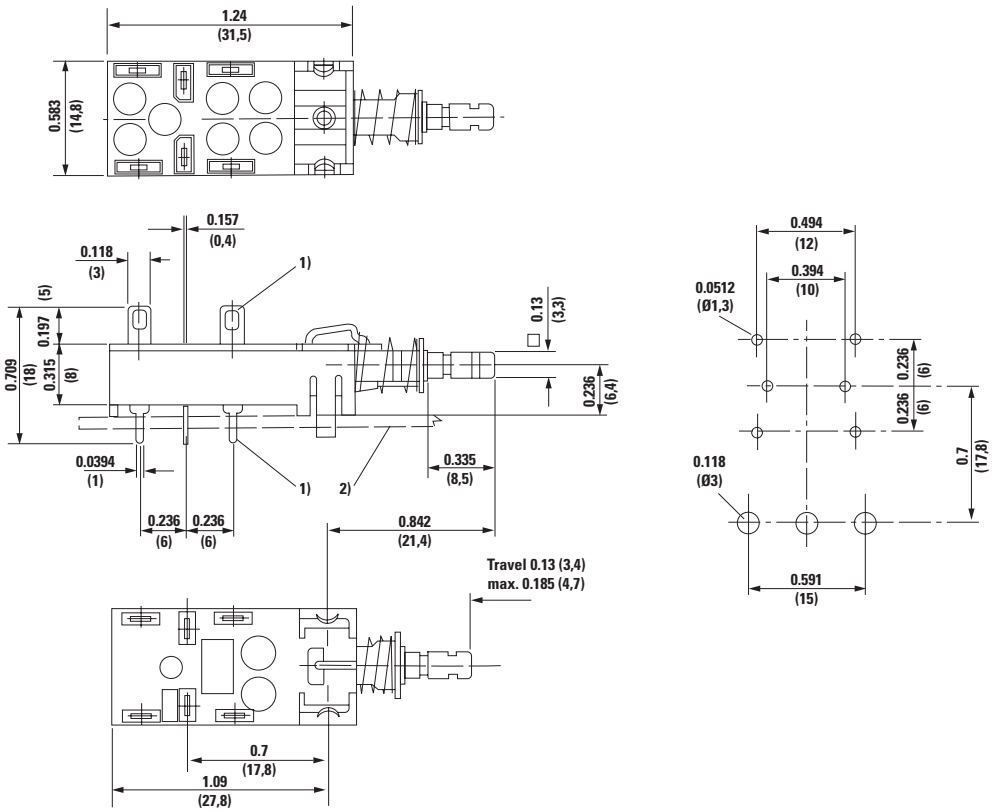

© 2025 Littelfuse, Inc.
Specifications are subject to change without notice.
Revised: VL 04/01/25

NE-18 Series
Mains / Power Switches

ZNE1838EECF0201

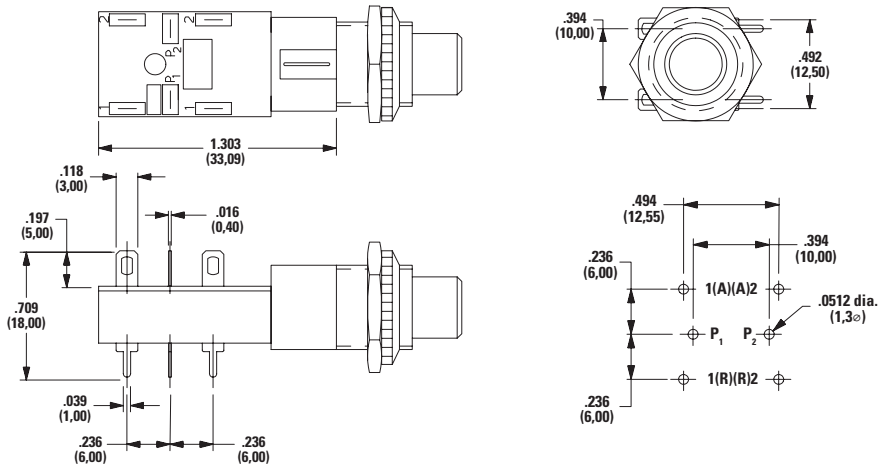

Contact Arrangement

Option Code Contact Capacity and Availability	Style	Electrical Circuit
37	NE18 - 2AX	DPST
38	NE18 - 2UX	DPDT
51	2U + NE18 - 2AX	DPST[1]
52 (4A/64)	NE18CTII - 2AX	DPST
39	2U + NE18 - 2UX	DPDT[1]
41	NE18 - 2AP	DPST
42	NE18 - 2UP	DPDT
43	NE18 - 2AW	DPST
44	NE18 - 2UW	DPDT
45	NE18 - 2ASX	DPST

Notes:
1. 2U + Denotes auxiliary set of low current contacts DPDT
2A = DPST
2U = DPDT
S = Snap-in mounting
X = Solder lug/PC pins
W = Solder lugs only
P = PC pins only

Option Code Contact Capacity and Availability	Style	Electrical Circuit
46	NE18 - 2USX	DPDT
47	NE18 - 2ASP	DPST
48	NE18 - 2USP	DPDT
49	NE18 - 2ASW	DPST
50	NE18 - 2USW	DPDT
53(4A/64)	2U + NE18CTII - 2AX	DPST
54	2U + NE18 - 2AW	DPST
55	2U - NE18 - 2AP	DPST
56	2U + NE18 - 2UW	DPDT
57	2U + NE18 - 2UP	DPDT

Notes:
Contact plating is silver on all Power Switches.
The electrical function is Break Before Make (BBM) on all Power Switches.
The terminals will be epoxy sealed.

Type	Possible Contact Arrangment		Contact Spacing	Protection Class (CEE 24)	Approvals
	Power Contacts[1]	Auxiliary Contacts			
NE18	2A[2]	2U	> 3mm (0.118 inch)	II	c UL us 15 UL61058-1
NE18	2A[2], 2U			I	
NE18CTII	2A[2]	-	> 3mm (0.118 inch)	II	

Notes:
1. A = make contact, U = changeover contact
2. With 2A mains contacts: Mounting only by PC pins is not sufficient.

Mechanical Function

Option Code	Function
OA	Momentary
EE	Alternate (push-push)

© 2025 Littelfuse, Inc.
Specifications are subject to change without notice.
Revised: VL 04/01/25

NE-18 Series
Mains / Power Switches

Single Station Chassis

01 with 0.094 Mounting Holes

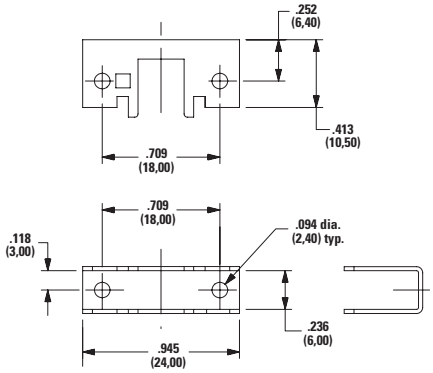

(None) No Chassis

02 with 4-40 Tapped Mounting Holes

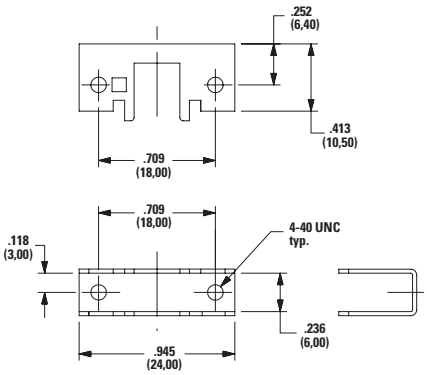

03 Special Chassis (Consult Factory)

Dress Nut

(None) No Dress Nut

B Black

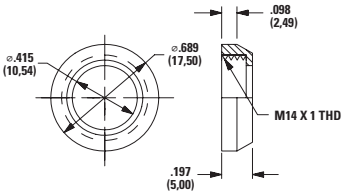

Panel Cutout

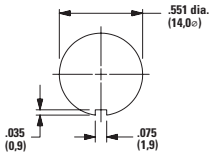

Note: Available with ZNE18 designation and FA200 buttons.

C Chrome

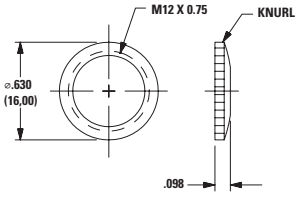

Panel Cutout

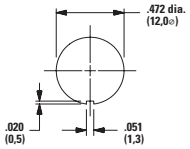

Note: Available with ZNE18 designation and FG buttons.

© 2025 Littelfuse, Inc.
Specifications are subject to change without notice.
Revised: VL 04/01/25

NE-18 Series
Mains / Power Switches

Solid Button Style

F01 FMR

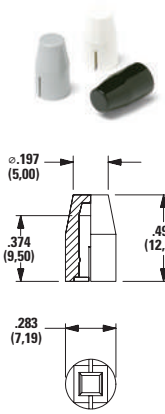

F02 FG

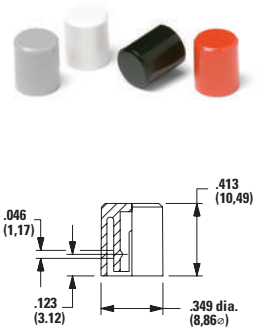

F12 FSC

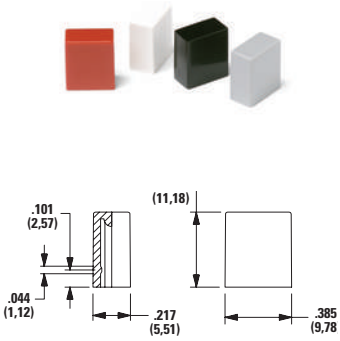

F13 FSD

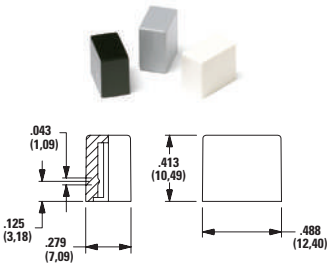

F14 FU12

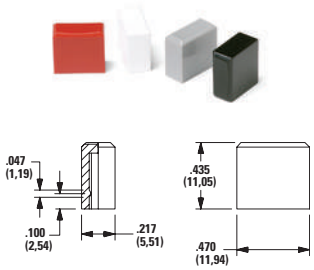

F15 FSB

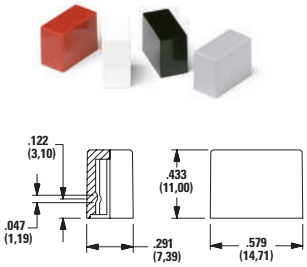

F16 FE

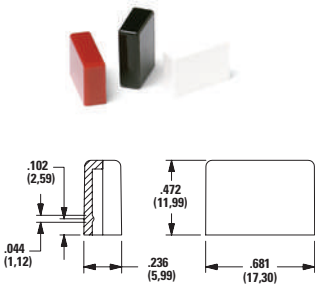

F19 FA

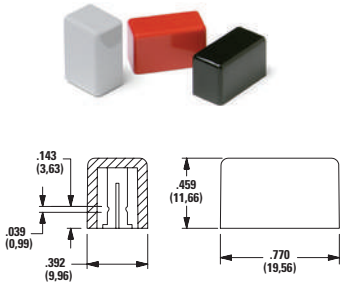

F21 F001

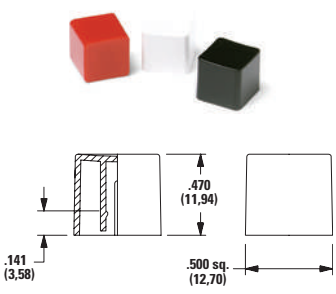

© 2025 Littelfuse, Inc.
Specifications are subject to change without notice.

NE-18 Series
Mains / Power Switches

F01~F19 color

Option Code	Color
01	Black
02	White
03	Red
04	LT. Gray

F21 color

Option Code	Color
01	Black
02	White
03	Red
04	LT. Gray
09	Black / Chrome 09 (F03,F06 & F07) buttons only

Mechanical Button Style

F01 FA100



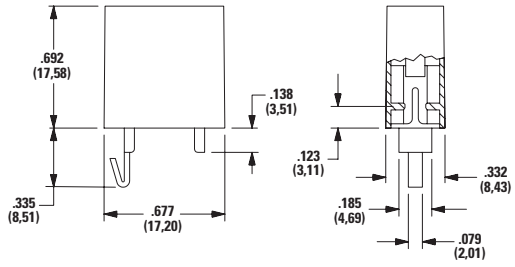

F02 FA101



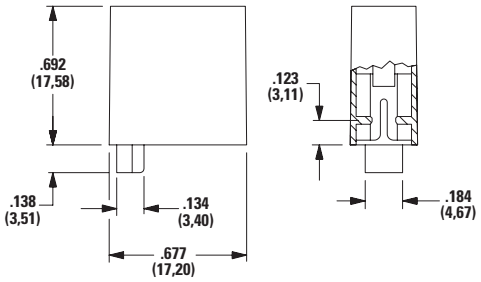

F08 FA201



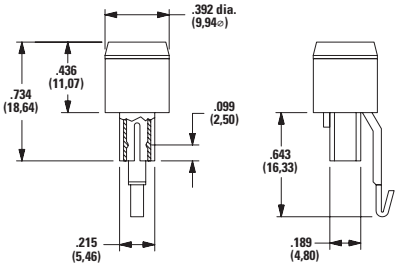

F11 FA200



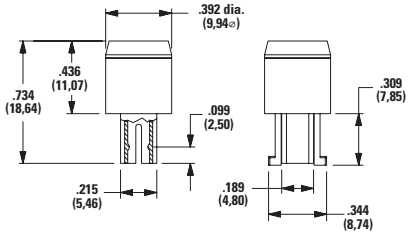

Shell Color
01 Black

Out Position Color
01 Black

In Position Color

Option Code	Color
02	White
06	Yellow
07	Blue
08	Green
12	Orange

Disclaimer Notice - Information furnished is believed to be accurate and reliable. However, users should independently evaluate the suitability of and test each product selected for their own applications. Littelfuse products are not designed for, and may not be used in, all applications. Read complete Disclaimer Notice at http://www.littelfuse.com/disclaimer-electronics.

© 2025 Littelfuse, Inc.
Specifications are subject to change without notice.
Revised: VL 04/01/25