# S6XM50A100VM



## Metrology- 1 phase power meter

Status: Available Data sheet created: 01.07.2025

**Item Number:** 2800210 - **Serie:** SensAct - **EAN:** 9008662014169




- 1-phase power meter AC up to 80V and 50A and DC up to 100V and 50A with Modbus RTU / RS485 interface
- Frequency range: DC or 1 to 400Hz
- Measured values: Irms, Vrms, Watt, VAR, VA, Vpk, Ipk, frequency, Cos?, energy measurement bidirectional, THD
- DIN rail mounting

## Description

Precise and reliable reading of mechanical, electrical and electronic measured values with analogue and digital evaluation options.

## General information

| | |
|---|---|
| **Short description** | 1-phase power meter 50A/100V with ModBus RTU / RS485 |
| **Item Number** | 2800210 |
| **EAN** | 9008662014169 |
| **Main category** | Measurement Technology |
| **Series** | SensAct |
| **Type** | S6XM50A100VM |
| **Supply** | 9-30V DC |

## Ambient conditions and general specifications

| | |
|---|---|
| **Pollution degree** | 2, pollution level can be increased by installation in suitable enclosures (according to IEC 60664-1) |

## Logistics

| | |
|---|---|
| **Minimum Quantity** | 1 |
| **Tariff Number** | 90303370 |
| **EAN** | 9008662014169 |
| **Country of Origin** | IT |
| **Product Weight (g)** | 88 |

## Available declarations / conformities

| | |
|---|---|
| **REACH** | Open document |
| **WEEE** | Open document |
| **TSCA** | Open document |
| **RoHs** | Open document |
| **CMRT** | Open document |

## Further documents

| | |
|---|---|
| **Modbus register S6XM_S9XM** | Download document |

## Software

| | |
|---|---|
| **SensAct-Software** | Download software |

## CAD Files

| | |
|---|---|
| **STEP_S1MM_en.stp** | Download file |
| **STEP_S6XM_en.stp** | Download file |
| **STEP_S6IA_en.stp** | Download file |
| **STEP_S6XM_en.stp** | Download file |
| **STEP_S9IA_en.stp** | Download file |
| **STEP_S9XM_en.stp** | Download file |

## Media & drawings




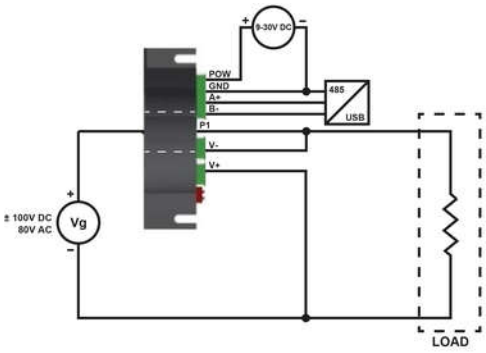


**Tele Haase Steuergeräte Ges.m.b.H**
Vorarlberger Allee 38
1230 Vienna
Austria

CALL US +43 / 1 / 614 74 - 0

ONLINE SUPPORT support@tele-haase.at

Changes and errors excepted