PN2514

Pressure sensor with display

PN-016-REG14-MFRKG/US/ /V

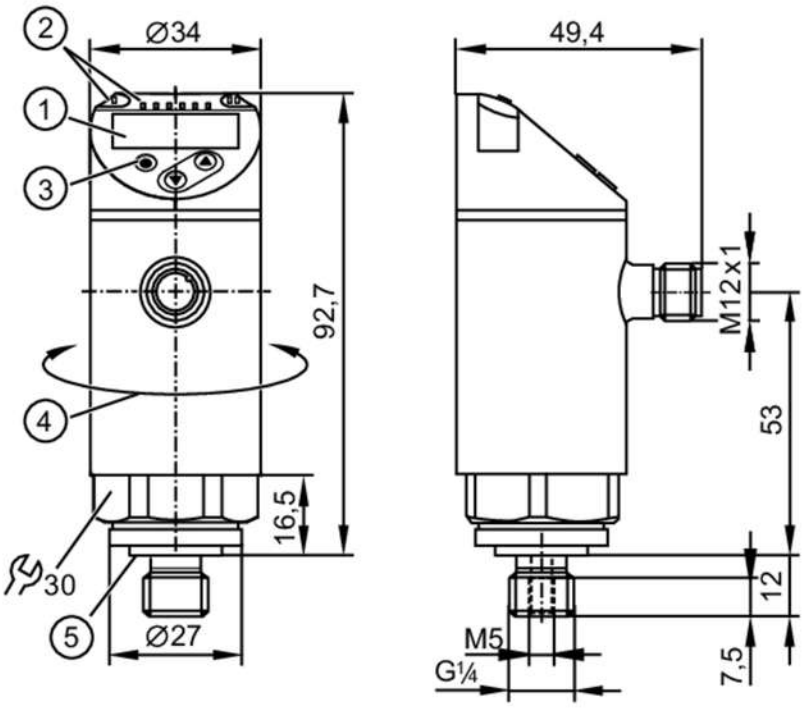

1 alphanumeric display 4-digit red/green
2 LEDs Display unit / switching status
3 programming button
4 upper part of the housing can be rotated 345°
5 Sealing

Product characteristics			
Number of inputs and outputs	Number of digital outputs: 2; Number of analogue outputs: 1		
Measuring range	-1...16 bar	-14.6...232 psi	-0.1...1.6 MPa
Process connection	threaded connection G 1/4 external thread (DIN EN ISO 1179-2); internal thread:M5		
Application			
Special feature	Gold-plated contacts		
Measuring element	ceramic-capacitive pressure measuring cell		
Application	for industrial applications		
Media	liquids and gases		
Medium temperature [°C]	-25...80		
Min. bursting pressure	150 bar	2200 psi	15 MPa
Pressure rating	85 bar	1250 psi	8.5 MPa
Vacuum resistance [mbar]	-1000		
Vacuum resistance [MPa]	-0.1		
Type of pressure	relative pressure		
Electrical data			
Operating voltage [V]	18...30 DC; (to SELV/PELV)		
Current consumption [mA]	< 35		
Min. insulation resistance [MΩ]	100; (500 V DC)		
Protection class	III		

PN2514

Pressure sensor with display

PN-016-REG14-MFRKG/US/ /V

Reverse polarity protection		yes		
Power-on delay time	[s]	0.3		
Integrated watchdog		yes		
Inputs / outputs				
Number of inputs and outputs		Number of digital outputs: 2; Number of analogue outputs: 1		
Outputs				
Total number of outputs		2		
Output signal		switching signal; analogue signal; IO-Link; (configurable)		
Electrical design		PNP/NPN		
Number of digital outputs		2		
Output function		normally open / normally closed; (parameterisable)		
Max. voltage drop switching output DC	[V]	2		
Permanent current rating of switching output DC	[mA]	250		
Switching frequency DC	[Hz]	< 500		
Number of analogue outputs		1		
Analogue current output	[mA]	4...20; (scalable 1:5)		
Max. load	[Ω]	500		
Analogue voltage output	[V]	0...10; (scalable 1:5)		
Min. load resistance	[Ω]	2000		
Short-circuit protection		yes		
Type of short-circuit protection		pulsed		
Overload protection		yes		
Measuring/setting range				
Measuring range		-1...16 bar	-14.6...232 psi	-0.1...1.6 MPa
Set point SP		-0.87...16 bar	-12.6...232.1 psi	-0.087...1.6 MPa
Reset point rP		-0.95...15.92 bar	-13.8...230.9 psi	-0.095...1.592 MPa
Analogue start point		-1...12.8 bar	-14.5...185.6 psi	0.1...1.28 MPa
Analogue end point		2.2...16 bar	31.9...232.1 psi	0.22...1.6 MPa
Min. difference between SP and rP		0.08 bar	1.2 psi	0.008 MPa
In steps of		0.01 bar	0.1 psi	0.001 MPa
Accuracy / deviations				
Switch point accuracy	[% of the span]	< ± 0,4; (Turn down 1:1)		
Repeatability	[% of the span]	< ± 0,1; (with temperature fluctuations < 10 K; Turn down 1:1)		
Characteristics deviation	[% of the span]	< ± 0,25 (BFSL) / < ± 0,5 (LS); (Turn down 1:1; BFSL = Best Fit Straight Line; LS = limit value setting)		
Hysteresis deviation	[% of the span]	< ± 0,1; (Turn down 1:1)		
Long-term stability	[% of the span]	< ± 0,05; (Turn down 1:1; per 6 months)		
Temperature coefficient zero point	[% of the span / 10 K]	< ± 0,2; (-0...80 °C)		

PN2514

Pressure sensor with display

PN-016-REG14-MFRKG/US/ /V

Temperature coefficient span [% of the span / 10 K]		< ± 0,2; (-0...80 °C)	
Notes on the accuracy / deviation		switch point accuracy, linearity error under DNV GL: < ± 1%: < ± 1%	
Response times			
Response time	[ms]	< 1.5	
Delay time programmable dS, dr	[s]	0...50	
Damping process value dAP	[s]	0...4	
Damping for the analogue output dAA	[s]	0...4	
Max. response time analogue output	[ms]	3	
Software / programming			
Parameter setting options		hysteresis / window; normally open / normally closed; switch-on/ switch-off delay; Damping; Display unit; current/voltage output	
Interfaces			
Communication interface		IO-Link	
Transmission type		COM2 (38,4 kBaud)	
IO-Link revision		1.1	
SDCI standard		IEC 61131-9	
Profiles		Smart Sensor ED2: Digital Measuring Sensor (0x000A), Identification and Diagnosis (0x4000)	
SIO mode		yes	
Required master port type		A; (when pin 2 not connected: B)	
Min. process cycle time	[ms]	3	
IO-Link resolution pressure	[bar]	0.002	
IO-Link process data (cyclical)		**function**	**bit length**
		pressure	16
		device status	4
		binary switching information	2
IO-Link functions (acyclical)		application specific tag	
Supported DeviceIDs		**Type of operation**	**DeviceID**
		default	1202
Note		For further information please see the IODD PDF file under "Downloads"	
Operating conditions			
Ambient temperature	[°C]	-25...80	
Storage temperature	[°C]	-40...100	
Protection		IP 65; IP 67	
Tests / approvals			
EMC		DIN EN 61000-6-2	
		DIN EN 61000-6-3	
Shock resistance		DIN EN 60068-2-27	50 g (11 ms)
Vibration resistance		DIN EN 60068-2-6	20 g (10...2000 Hz)
MTTF	[years]	167	
UL approval		UL Approval no.	J012
		File number UL	E174189

PN2514

Pressure sensor with display

PN-016-REG14-MFRKG/US/ /V

Pressure Equipment Directive		Sound engineering practice; can be used for group 2 fluids; group 1 fluids on request
Mechanical data		
Weight	[g]	271.4
Housing		cylindrical
Dimensions	[mm]	Ø 34 / L = 92.7
Materials		stainless steel (316L/1.4404); PBT+PC-GF30; PBT-GF20; PC
Materials (wetted parts)		stainless steel (316L/1.4404); Al2O3 (ceramics); FKM
Min. pressure cycles		100 million
Tightening torque	[Nm]	25...35; (recommended tightening torque; depends on lubrication, seal and pressure rating)
Process connection		threaded connection G 1/4 external thread (DIN EN ISO 1179-2); internal thread:M5
Process connection sealing		FKM (DIN EN ISO 1179-2)
Restrictor element integrated		no (can be retrofitted)

Displays / operating elements		
Display	Display unit	3 x LED, green (bar, psi, MPa)
	switching status	2 x LED, yellow
	measured values	alphanumeric display, red/green 4-digit

Remarks	
Pack quantity	1 pcs.

Electrical connection

Connector: 1 x M12; coding: A; Contacts: gold-plated



PN2514

Pressure sensor with display

PN-016-REG14-MFRKG/US/ /V

Connection

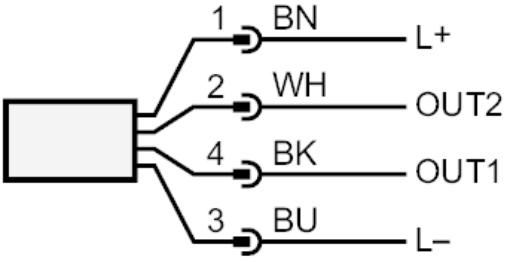

OUT1	switching output IO-Link
OUT2	switching output analogue output
	Core colours :
BK =	black
BN =	brown
BU =	blue
WH =	white