73 Series - IP68 Waterproof Enclosure

Product Overview

• IP68 high performance plastic enclosure protected from immersion as long as 24 hours at 1m depth

• ASA material is resistant to deterioration and discolouration from ultraviolet rays. Perfect for use as outdoor communication and network devices

• With a silicone waterproof gasket, and supported by multiple enclosing screws from the rear side, it allows the enclosure to maintain a stable high waterproofing capability

• There is no risk of screws dropping out and being lost during maintenence. Captive screws are able to lock into a pre-drilled hole to provide a secure hold

• Base includes moulded PCB pillars suitable for 4mm self-tapping screws

SPECIFICATION	
Protection class	IP68 (24-hours/1m-depth)
Operating teperature	-30°C to +60°C
Recommended torque	0.5 to 0.6Nm
Material	UV-resistant ASA UL94HB

Technical Data

PART NUMBER	EXTERNAL DIMENSIONS			INTERNAL DIMENSIONS			SCREW
	L	W	H	L	W	H	
CHD7310WH	150	100	55	115	63	43	4mm x 8 pcs
CHD7320WH	150	100	75	114	62	63	4mm x 8 pcs
CHD7330WH	150	145	55	120	107	43	4mm x 8 pcs
CHD7340WH	155	145	80	118	105	68	4mm x 8 pcs
CHD7350WH	210	145	60	174	107	48	4mm x 10 pcs
CHD7360WH	210	145	90	172	105	78	4mm x 10 pcs

Standard Unit Includes

NO.	PART NAME	PIECES	MATERIAL	COLOUR
1	Lid	1	ASA UL94HB	Off-white
2	Base	1	ASA UL94HB	Off-white
3	Gasket	1	Silicone	Black
4	Thread-forming captive screw	8 - 10	Stainless steel	Natural finish

Applications and Industries

Potential uses for the enclosures are as follows: Access point enclosure, IoT gateway enclosure, Terminal junction box, Outdoor communication device, 5G network enclosure, Signal switcher box, LoRaWAN enclosure and much more.

Enclosures can be customised with CNC milling and digital printing to fit your branding and connectivity requirements.

Terminal Junction Box



Signal Switcher Box

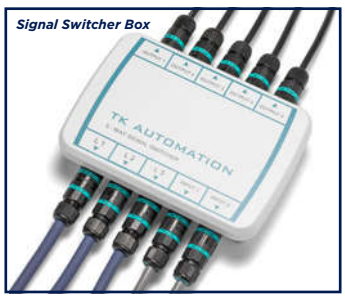

CHD7310WH



Technical Drawings

CHD7310WH

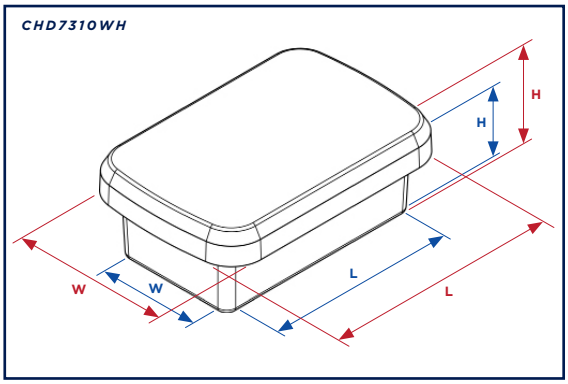

CHD7310WH

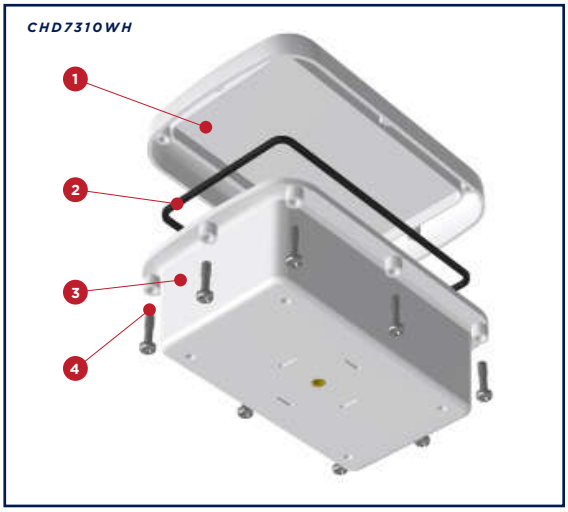

Mixing Flow Selector



5G IoT Gateway



73 Series - IP68 Waterproof Enclosure

Assembly

There are holes on the back of the base for accessories. The corner holes are for the wall mounting brackets, and center holes are for pole mounting brackets.

PART NUMBER	SCREW HOLES	
	CORNER	CENTER
CHD7310WH CHD7320WH CHD7330WH CHD7340WH	4 x self-tapping	1 x threaded
CHD7350WH CHD7360WH	4 x self-tapping	2 x threaded

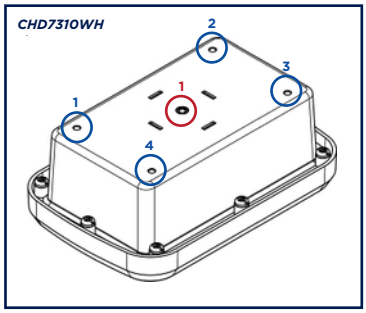

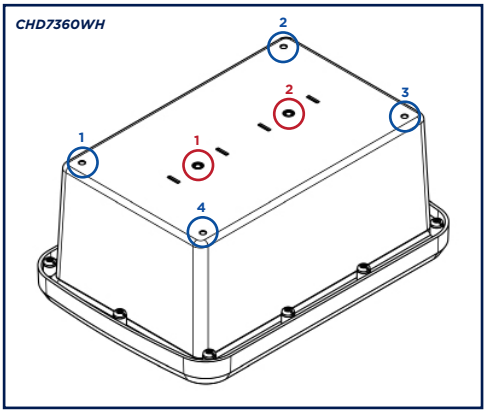

Product Accessories

By using the mounting accessories, it can be installed on walls and poles with ease and with no need to modify the enclosure.

PART NUMBER	COMPATIBLE ENCLOSURES	ACCESSORY INCLUDES	MATERIAL	IMAGE
CHD73PSW	CHD7310WH CHD7320WH CHD7330WH CHD7340WH CHD7350WH CHD7360WH	1 x Pole mounting bracket (single)	ASA UL94HB	
		1 x M4 Screw	Stainless steel	
CHD91PX1WG	CHD7350WH CHD7360WH	1 x Pole mounting bracket (cross)	ASA UL94HB	
		2 x M4 screw	Stainless steel	
CHD73W10	CHD7310WH CHD7320WH	2 x Wall mounting bracket (small)	Stainless steel	
		4 x 4mm screw	Stainless steel	
CHD73W15	CHD7310WH* CHD7320WH* CHD7330WH CHD7340WH CHD7350WH CHD7360WH	2 x Wall mounting bracket (large)	Stainless steel	
		4 x 4mm screw	Stainless steel	

** = CHD73W15 wall mounting bracket can only be installed along the length of the CHD7310WH and CHD7320WH*



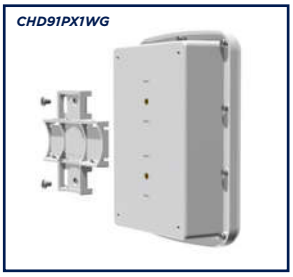





Pole clamp not included with bracket.





Optional Accessories

You can use our optional cable gland for outdoor use when waterproofing is critical.

PART NUMBER	DESCRIPTION	COLOUR*	TECHNICAL	RATING
CGLBM12	Cable Gland	Black	M12x1.5	IP67
CGLBM16	Cable Gland	Black	M16x1.5	IP67
CGLBM20	Cable Gland	Black	M20x1.5	IP67
CGLBM25	Cable Gland	Black	M25x1.5	IP67

** = Grey versions available upon request*





Screw-in Pressure Vents available upon request

We operate a constant improvement policy, our products are subject to change without notice.