DN4011

Switched-mode power supply 24 V DC

PSU-1AC/24VDC-3,3A

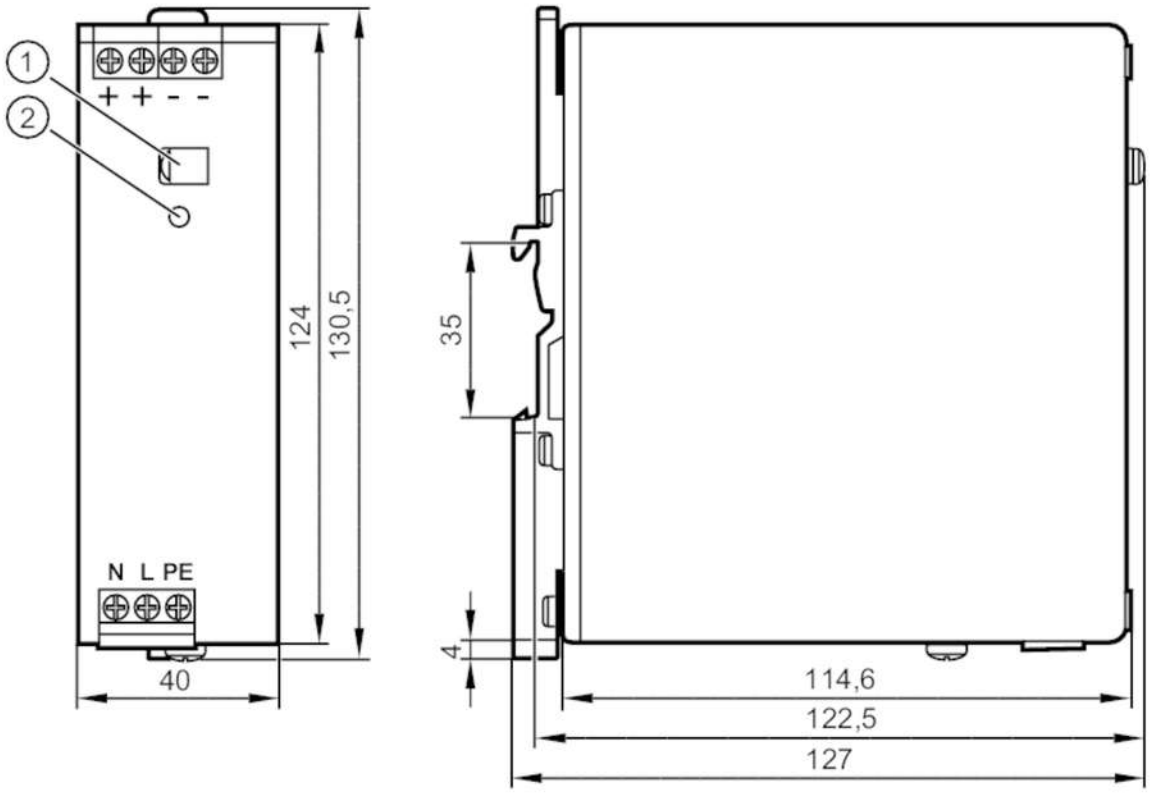

1 potentiometer 24...28 V DC
2 LED DC ok

Electrical data		
Frequency AC	[Hz]	47...64
Operating voltage tolerance	[%]	10
Operating voltage tolerance 2	[%]	20
Nominal voltage AC	[V]	< 230
Input voltage DC	[V]	110...300
Input voltage range AC	[V]	100...240
Output voltage DC	[V]	24...28
Protection class		I; (IEC 61140)
Overvoltage protection		yes; (< 39 DC)
Output voltage	[V]	adjustable; output voltage to SELV, PELV
Max. output current at min. output voltage	[A]	3.3
Max. output current at max. output voltage	[A]	2.7
Max. output current peak at min. output voltage	[A]	3.3
Max. output current peak at max. output voltage	[A]	2.7
Output power (permanent)	[W]	80
Output power (peak)	[W]	80

DN4011

Switched-mode power supply 24 V DC

PSU-1AC/24VDC-3,3A

Power factor (nominal voltage 120 V AC / 60 Hz)		0.61
Power factor (nominal voltage 230 V AC / 50 Hz)		0.56
Number of output circuits		1
Max. residual ripple	[mV]	50
Switch-on peak current (nominal voltage 120 V AC / 60 Hz)	[A]	23
Switch-on peak current (nominal voltage 230 V AC / 50 Hz)	[A]	45
Inrush current limitation		yes
Efficiency (nominal voltage 120 V AC / 60 Hz)	[%]	88
Efficiency (nominal voltage 230 V AC / 50 Hz)	[%]	89.8
External input protection		≤ B-10 A / ≤ C-6 A
Derating	[W/K]	1.8 (60...70 °C)
Mains buffering time (nominal voltage 120 V AC / 60 Hz)	[ms]	30
Mains buffering time (nominal voltage 230 V AC / 50 Hz)	[ms]	128
Input current (nominal voltage 120 V AC / 60 Hz)	[A]	1.24
Input current (nominal voltage 230 V AC / 50 Hz)	[A]	0.68
Power loss (nominal voltage 120 V AC / 60 Hz)	[W]	11.1
Power loss (nominal voltage 230 V AC / 50 Hz)	[W]	9.1
Back feeding protection	[V]	35

Outputs

Overload protection		yes
Overload performance		output current constant

Operating conditions

Ambient temperature	[°C]	-25...70
Note on ambient temperature		observe the free space for convection (see operating instructions)
Storage temperature	[°C]	-40...85
Max. relative air humidity	[%]	95; (IEC 60068-2-30)
Protection		IP 20; (EN 60529)
Pollution degree		2; (IEC 62103: conductive soiling not permitted)

Tests / approvals

EMC	EN 61000-6-1	
	EN 61000-6-2	
	EN 61000-6-3	
	EN 61000-6-4	
	EN 61000-3-2	Class A
Vibration resistance	IEC 60068-2-6	±1,6 mm 2...17,8 Hz / 2 g 17,8...500 Hz
Shock resistance	IEC 60068-2-27	30 g 6 ms / 20 g 11 ms

DN4011

Switched-mode power supply 24 V DC

PSU-1AC/24VDC-3,3A

Power Factor Correction (PFC)		met

Mechanical data

Weight	[g]	569
Type of mounting		rail; (TH35 (EN 60715))
Dimensions	[mm]	124 x 40 x 122.5
Materials		steel sheet

Displays / operating elements

Display	DC ok	1 x LED

Remarks

Remarks	Series connection of outputs only applies to identical units up to max. 150 V DC overall voltage
Pack quantity	1 pcs.

Electrical connection

screw terminals:

Connection

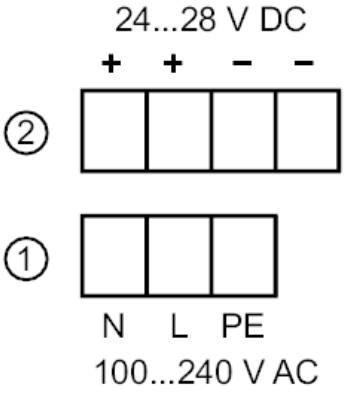

1: primary
2: secondary

Diagrams and graphs

block diagram

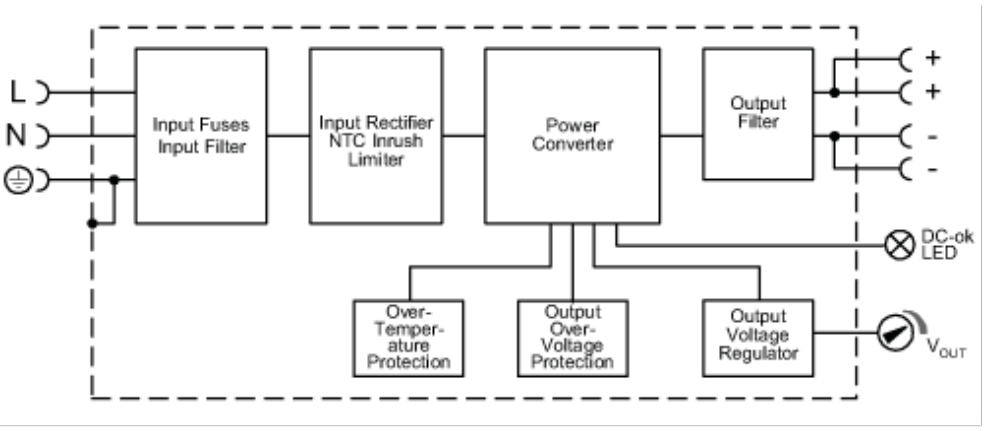

DN4011

Switched-mode power supply 24 V DC

PSU-1AC/24VDC-3,3A

output characteristics

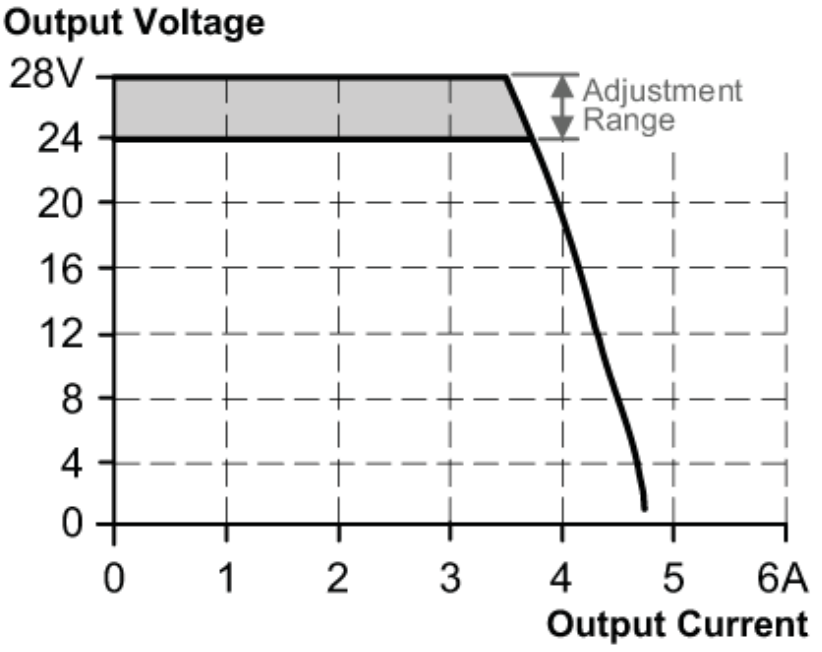

characteristic curve for degree of efficiency / power loss

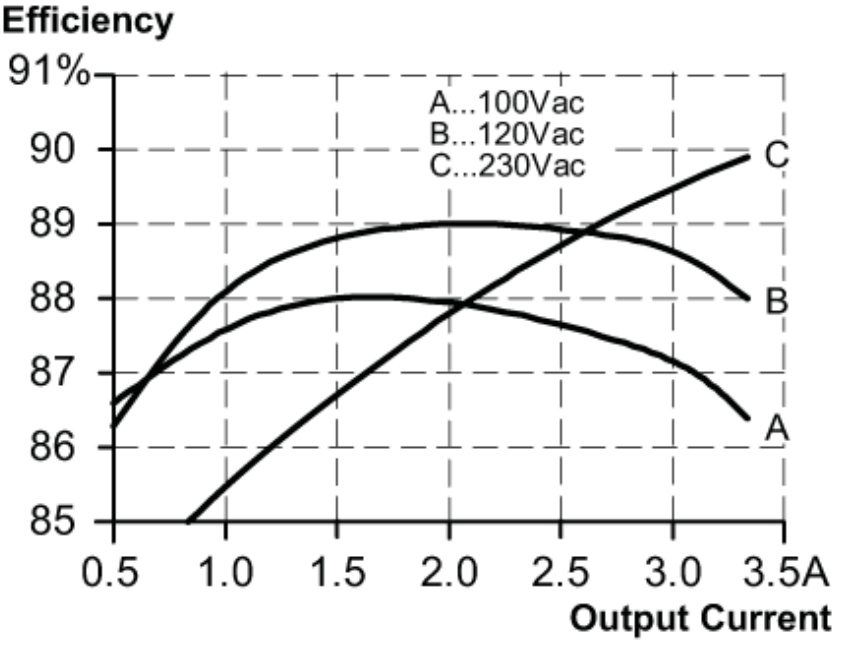

DN4011

Switched-mode power supply 24 V DC

PSU-1AC/24VDC-3,3A

characteristic line for derating

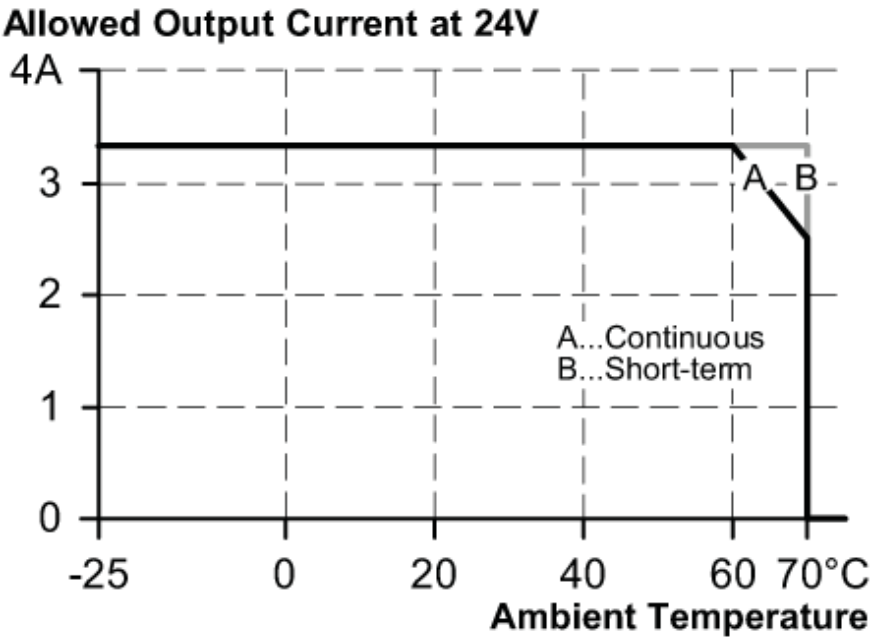

characteristic line for mains buffering time

