RoHS ✔

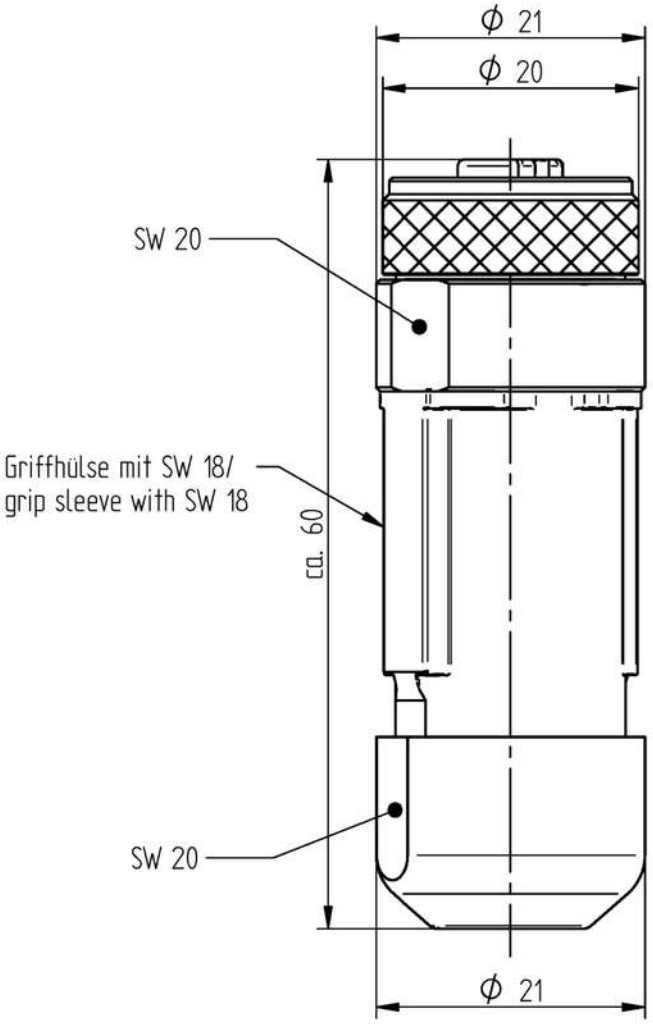

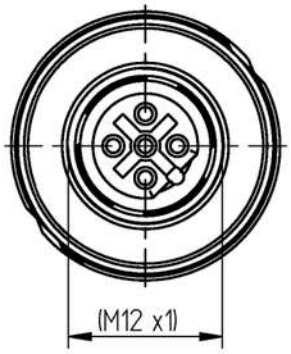

Typ/ *type*	Kontaktbelegung/ *contact assignment*		
	Polzahl/ *number of poles*		Kabelverschraubung/ *screwjoint for cable*
0976 PFC 101	5	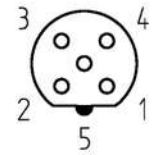	Ø 4,0 - 6,2 mm und 8 - 9 mm

The information/details in this datasheet merely contain general descriptions or performance factors which, when applied in an actual situation, do not always correspond with the described form, and may be amended by way of the further development of products. The desired performance factors shall only be binding if these are expressly agreed on conclusion of the contract.

DIN ISO 5456-2

Product description

Description	M12 female connector with threaded joint, field attachable and shielded
Type	0976 PFC 101
Order No	66247
Type of contacts	female, screw terminal
Number of contacts	5
Cable gland	PG 9
Conductor size	0,14 (with wire end ferrule) - 0,75 mm²
Standard	IEC 61076-2-101
Construction type	JF, B-coded

Technical data

Rated voltage	50 V AC / 60 V DC
Rated current *	4 A
Rated impulse voltage	1,5 kV
Pollution degree	3 acc. to DIN EN 60664-1 (VDE 0110-1)
Contact resistance	≤ 5 mOhm
Insulation resistance	> 10^9 Ohm
Type of connection	screw terminal

* Notice derating

Materials

Contact bearer	PBT, black
Housing	GD - ZnAl
Surface housing	Cu, Ni
Contact	CuZn
Contact plating	SnZn, pre copper-plated
Cable gland screw	CuZn, nickel-plated
Knurled nut	CuZn, nickel-plated
Coupling nut	CuZn, nickel-plated
Shield contacting spring	CuBe, tinned
O-ring	FKM
Insulating sleeve	PA
Clamp cage	PBT

Environmental conditions

Protection class (IEC 60529) *	IP67
Temperature range (connector)	-25°C to +90°C, notice Derating

Good chemical resistance.
The resistance has to be checked in individual cases.

* only if mounted and locked in combination with Hirschmann / Lumberg connector.
on the installation side tightness has to be assured by taking proper measures

Notes

Do not connect / disconnect under load.
* a o-ring

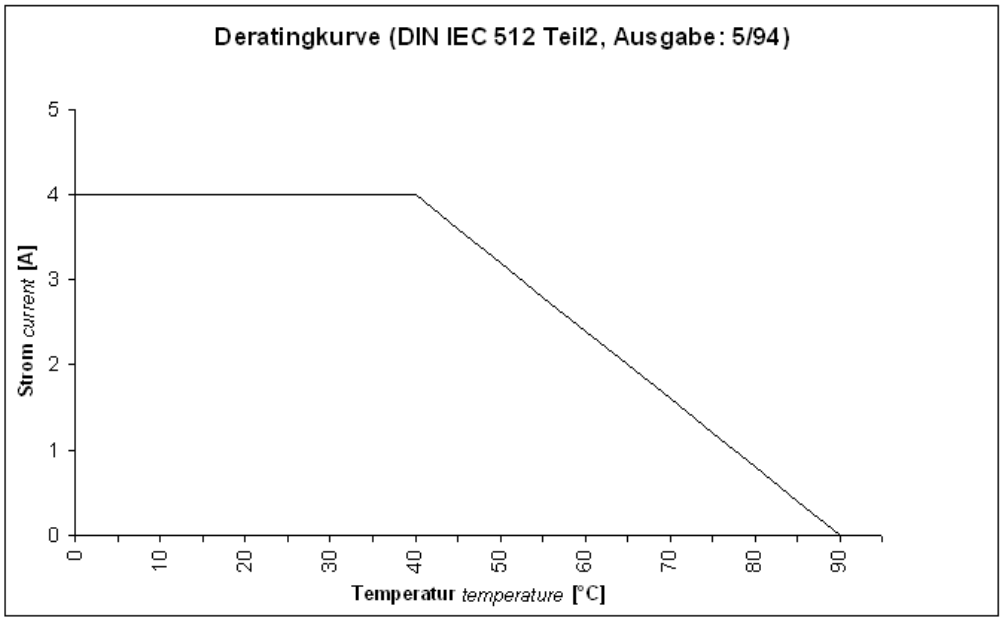

product overview

Article-No.	Type
000-066-247	0976 PFC 101