Thermo Electric Devices

PRODUCT DATA SHEET

THP68B

INTEGRATED HEATPUMP ASSEMBLY

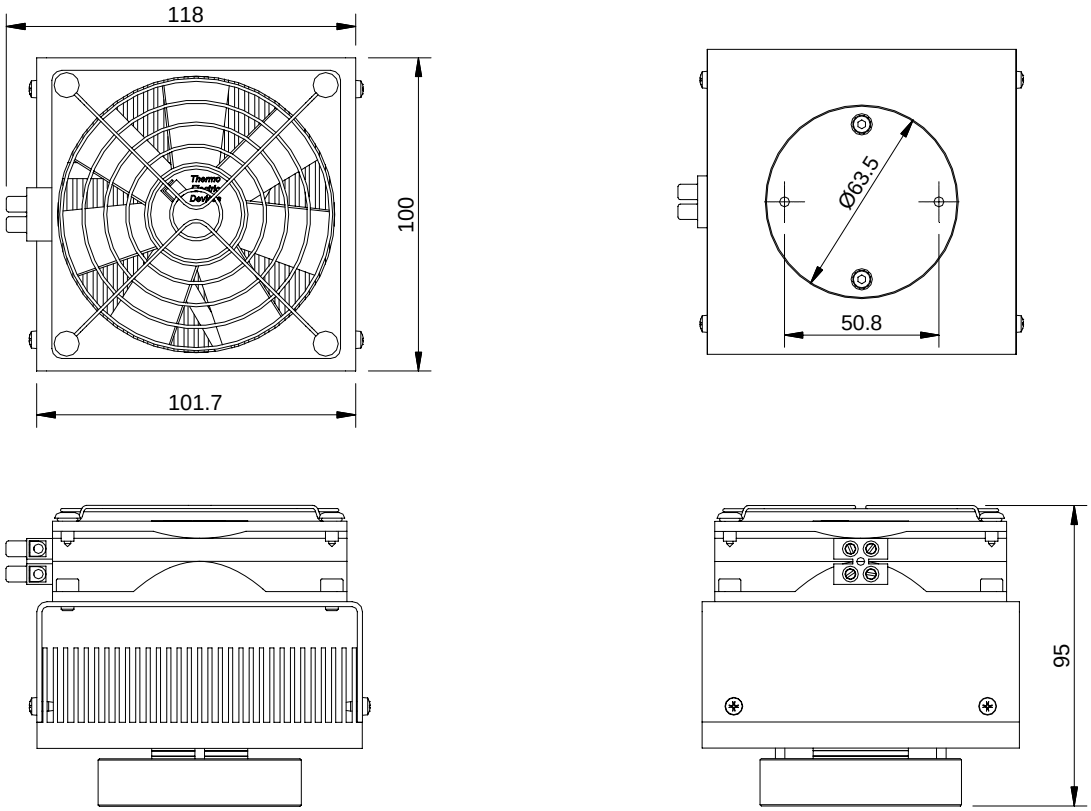

Description:

The THP68B is a high performance air to plate heat pump assembly using a single 40mm 68W TEC, with a forced convection extruded aluminium heat exchanger.

Applications include discrete temperature control of thermally sensitive components or samples. With a bi-polar controller it can be used to both heat or to cool.

It is supplied with the TEC and fan wired in parallel, however the removal of a jumper allows the fan and TEC to be controlled independently.

The AA68 – Kit is available as an option to allow the unit to be configured for air to air applications.

Dimensions:

Thermo Electric Devices reserve the right to change specification without notice.

Hot side	118mm x 100mm x 95mm
Cold plate	63mm dia x 15mm
Mass	800g

Electrical:

V range	6 -12VDC
I max	7.0A

Thermal:

Delta t max: (ambient to coldside)	50 deg C
Heat pumping (cooling): Max @ delta t = 0	55W
Typical @ delta t = 25 (12V)	27W
Heat pumping (heating): Max @ delta t = 0	130W

Environmental:

Operating temperature: -20 to +50 deg C

IP20

THP68B Performance Graph (25 deg C)

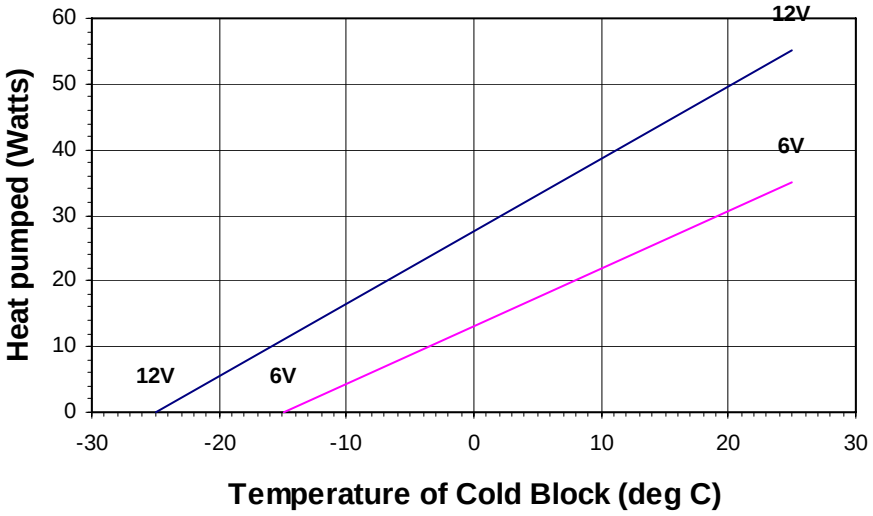

Thermo Electric Devices
Unit 1 Draycott Business Centre
Draycott
GL56 9JY
UK

T: 01386 701703
F: 01386 701618
E: mail@thermoelectricdevices.co.uk
W: www.thermoelectricdevices.co.uk

Thermo Electric Devices reserve the right to change specification without notice.