

UNIVERSAL CONVEYOR ROLLER SERIES 1700

Flexible use - the silent conveyor roller for heavy-duty loads

Product Description

Customer benefits

- Tried and tested a million times over
  - Universal Conveyor Roller with an extensive range of applications
- Silent conveyor roller
  - Precision ball bearing, technopolymer bearing housing and seal
- Protects the ball bearing from coarse dirt and water
  - Integral water-repellent groove
- Axial loads are possible
  - Axial forces diverted by ball bearing
- Gentle lateral pushing of the materials to be conveyed
  - Rounded tube ends

Applications

- In-house conveyor technology
- Driven conveyors for packaged goods
- Transport of tyres and rims

Properties

- Sealed precision ball bearings (6002 2RZ, 6003 2RZ, 689 2Z)
- Form-fit axial fixing of bearing housing, ball bearing and seal

Associated platform

- Platform 1700

Technical Data

General technical data	
Max. load capacity	3,000 N
Max. conveyor speed	2.0 m/s
Temperature range	-5 to +40 °C
Materials	
Bearing housing	Polyamide
Seal	Polypropylene
Ball bearing	6003 2RZ / Steel 6002 2RZ / Steel 689 2Z

Load capacity

The load capacity depends on the shaft version, the tube diameter and the length of the roller.

Tube material	Shaft version	Ball bearing	Ø Tube mm	Ø Shaft mm	Max. load capacity in N with an installation length of mm							
					200	300	400	600	800	1000	1300	1600
PVC	Spring-loaded shaft	6002 2RZ	50 x 2.8	8-10	660	280	150	65	36	–	–	–
Steel	Spring-loaded shaft	689 2Z	30 x 1.2	8	150	150	150	150	–	–	–	–
		6002 2RZ	40 x 1.5	10-12	800	800	800	800	730	490	330	–
			50 x 1.5	10	1800	1140	840	560	420	340	260	220
				12	2000	2000	1800	1200	920	760	620	520
				11 hex	2000	2000	1640	1020	780	640	520	440
			60 x 1.5	10	1630	1130	830	540	400	320	250	200
				12	2000	2000	1740	1160	870	700	580	460
				11 hex	2000	2000	1500	1000	740	600	475	390
	Female thread	6002 2RZ	40 x 1.5	12	800	800	800	800	800	560	330	–
			50 x 1.5	12	2000	2000	2000	2000	1770	1120	660	440
				14	2000	2000	2000	2000	1770	1120	660	440
				17	3000	3000	3000	3000	1770	1120	660	440
			60 x 1.5	12	2000	2000	2000	2000	2000	2000	1160	760
				14	2000	2000	2000	2000	2000	2000	1160	760
		6003 2RZ	60 x 3.0	17	3000	3000	3000	3000	3000	3000	2140	1400
	Tapered shaft-shuttle	6002 2RZ	50 x 1.5	11-12 hex	350	350	350	350	350	350	–	–

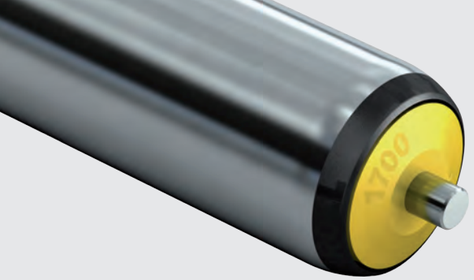

UNIVERSAL CONVEYOR ROLLER SERIES 1700

Flexible use - the silent conveyor roller for heavy-duty loads

Product Selection

Spring-loaded shaft version

Tube				Ball bearing	Shaft			
					Reference number			
Material	Ø mm	Torque transmission	Sleeve		Ø 8 mm	Ø 10 mm	11 mm hex	Ø 12 mm
PVC	50 x 2.8	Without grooves	–	6002 2RZ stainless steel	1.7XJ.SAA.GAB	1.7XK.SAA.KAC		
		Without grooves	–	6002 2RZ	1.7X9.SAA.EAB	1.7X0.SAA.HAC		
Steel, stainless steel	50 x 1.5	Without grooves	–	6002 2RZ stainless steel		1.7XQ.NAA.KAC		1.7XR.NAA.MB0
Steel, zinc-plated	30 x 1.2	Without grooves	–	6002 2RZ	1.72B.J20.EAJ			
		Without grooves	–	689 2Z	1.731.J31.EAJ			
	40 x 1.5	Without grooves	PVC, 5 mm	6002 2RZ	1.7W1.JF5.EAB	1.7W2.JF5.HAC	1.7W5.JF5.VAB	1.7W3.JF5.LAC
		Without grooves	–	6002 2RZ		1.7W2.JF4.HAC	1.7W5.JF4.VAB	1.7W3.JF4.LAC
	50 x 1.5	1 groove	–	6002 2RZ		1.7X2.JAD.HAC	1.7X5.JAD.VAB	1.7X3.JAD.LAC
		2 grooves	PVC, 2 mm	6002 2RZ		1.7X2.JCG.HAC	1.7X5.JCG.VAB	1.7X3.JCG.LAC
		2 grooves	–	6002 2RZ		1.7X2.JAE.HAC	1.7X5.JAE.VAB	1.7X3.JAE.LAC
		Without grooves	PVC, 2 mm	6002 2RZ		1.7X2.J72.HAC	1.7X5.J72.VAB	1.7X3.J72.LAC
		Without grooves	–	6002 2RZ		1.7X2.JAA.HAC	1.7X5.JAA.VAB	1.7X3.JAA.LAC
	60 x 1.5	Without grooves	–	6002 2RZ		1.7Y2.JAB.HAC	1.7Y5.JAB.VAB	1.7Y3.JAB.LAC

Female threaded shaft version

Tube				Ball bearing	Shaft		
					Reference number		
Material	Ø mm	Torque transmission	Sleeve		Ø 12 mm (M8 x 15)	Ø 14 mm (M8 x 15)	Ø 17 mm (M12 x 20)
Steel, zinc-plated	40 x 1.5	Without grooves	–	6002 2RZ	1.7W3.JF4.LAE	1.7W4.JF4.NAE	
		Without grooves	PVC, 5 mm	6002 2RZ	1.7W3.JF5.LAE	1.7W4.JF5.NAE	
	50 x 1.5	Without grooves	–	6002 2RZ	1.7X3.JAA.LAE	1.7X4.JAA.NAE	
		Without grooves	PVC, 2 mm	6002 2RZ	1.7X3.J72.LAE	1.7X4.J72.NAE	
		2 grooves	PVC, 2 mm	6002 2RZ	1.7X3.JCG.LAE	1.7X4.JCG.NAE	
		2 grooves	–	6002 2RZ	1.7X3.JAE.LAE	1.7X4.JAE.NAE	
		1 groove	–	6002 2RZ	1.7X3.JAD.LAE	1.7X4.JAD.NAE	
	60 x 1.5	Without grooves	–	6002 2RZ	1.7Y3.JAB.LAE	1.7Y4.JAB.NAE	
	50 x 1.5	Without grooves	–	6003 2RZ			1.75K.JAA.RAA
	60 x 3.0	Without grooves	–	6003 2RZ			1.75L.J63.RAA

Tapered shaft-shuttle shaft version

Tube				Ball bearing	Shaft
					Reference number
Material	Ø mm	Torque transmission	Sleeve		8 mm hex, shuttle 11 mm hex
Steel, zinc-plated	50 x 1.5	Without grooves	–	6002 2RZ	1.7X7.JX5.V8T
		2 grooves	PVC, 2 mm	6002 2RZ	1.7X7.JCG.V8T
		2 grooves	–	6002 2RZ	1.7X7.JAE.V8T
		1 groove	–	6002 2RZ	1.7X7.JAD.V8T

On request, we can offer you further options in addition to our standard products (cf. p 45).

Please state the reference length RL and optionally the dimensions for the grooves and tube sleeve on in addition to the reference number.

Example of a reference number: 1.7X5.JAA.VAB - 490

This reference number is for a conveyor roller Series 1700, Ø tube 50 mm, zinc-plated steel, without grooves shaft version 11 mm hex spring-loaded shaft and reference length 490 mm. The reference length RL can be found in the table of dimensions for spring-loaded shafts: RL = EL - 10. The axial play of 0.5 mm per side has already been taken into account. The nominal clearance of your conveyor is 500 mm, which also corresponds to the installation length EL, i. e. the reference length is: 500 - 10 = 490 mm.

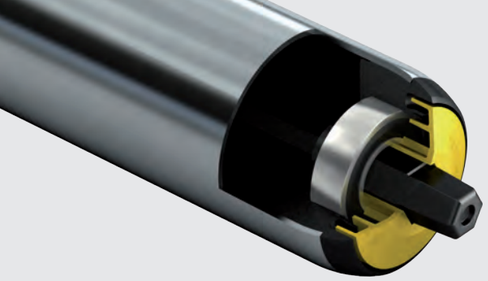

UNIVERSAL CONVEYOR ROLLER SERIES 1700

Flexible use - the silent conveyor roller for heavy-duty loads

RL	Reference length/Ordering length*
EL	Installation length
AGL	Total length of shaft
F	Length of the bearing assembly, including axial play

*The reference length/ordering length RL does not have any reference edges on the conveyor roller and can therefore not be shown.

Dimensions for spring-loaded shaft

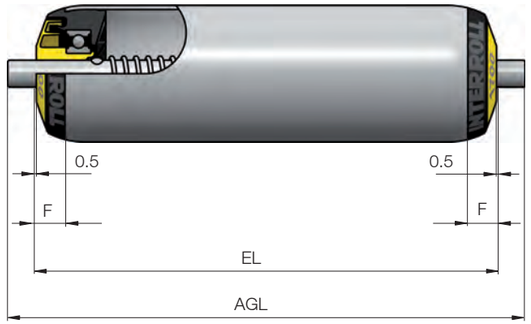

Ø Shaft mm	Ø Tube mm	RL mm	AGL mm	F mm
8	30 / 40 / 50	EL - 10	EL + 16	8.5 / 11 / 11
10	40 / 50 / 60	EL - 10	EL + 20	11
12	50 / 60	EL - 10	EL + 24	11
11 hex	50 / 60	EL - 10	EL + 22	11

Dimensions for female threaded shaft

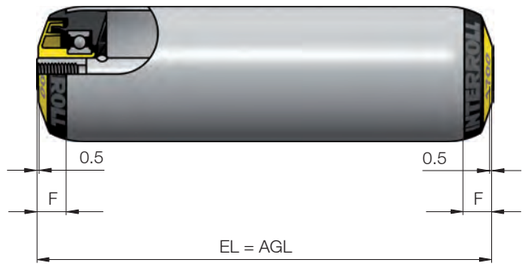

Ø Shaft mm	Thread mm	Ø Tube mm	RL mm	AGL mm	F mm
12	M8 x 15	40 / 50 / 60	EL - 10	EL	11
14	M8 x 15	50 / 60 / 80	EL - 10	EL	11
17	M12 x 20	50 / 60	EL - 10	EL	11

Dimensions for tapered shaft-shuttle

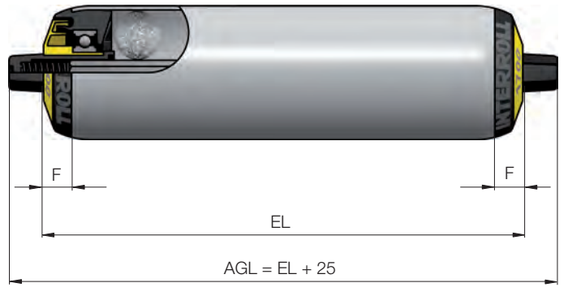

Ø Shaft mm	Shuttle mm	Ø Tube mm	RL mm	AGL mm	F mm
8 hex	11-12 hex	50	EL - 10	EL + 25	11

Ordering Dimensions for Grooves and Tube Sleeves

Version with grooves

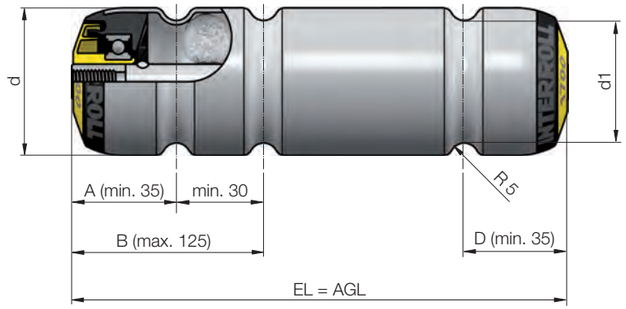

d mm	d1 mm
40	28.3
50	38.4
60	48.4
80	68.4

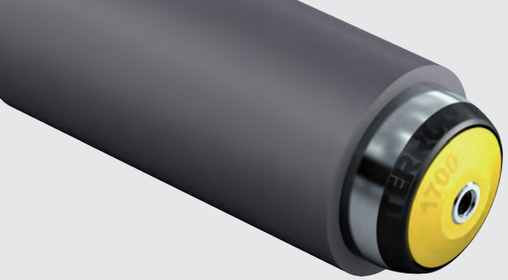

UNIVERSAL CONVEYOR ROLLER SERIES 1700

Flexible use - the silent conveyor roller for heavy-duty loads

Tube sleeves

- For the transport of sensitive material to be conveyed
- To reduce the noise level
- To improve the coefficient of friction
- To reduce speeds

Please note that The minimum sleeve width is 50 mm, the minimum installation length (EL) is 100 mm.

When ordering a conveyor roller with tube sleeve, please state the relevant dimensions A - D.

With PVC sleeve

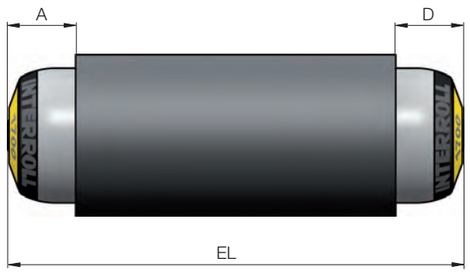

With grooves and PVC sleeve

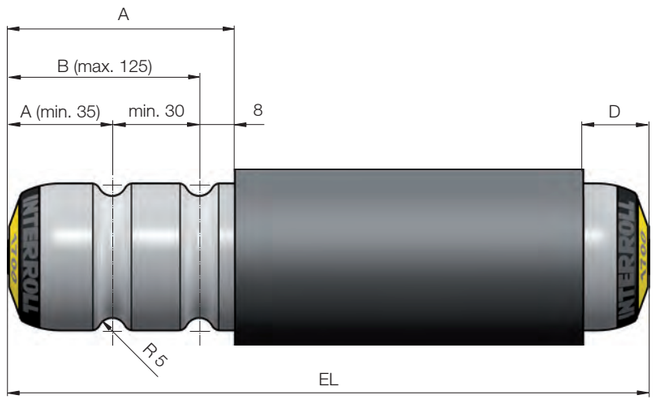

With PVC sleeve, cut

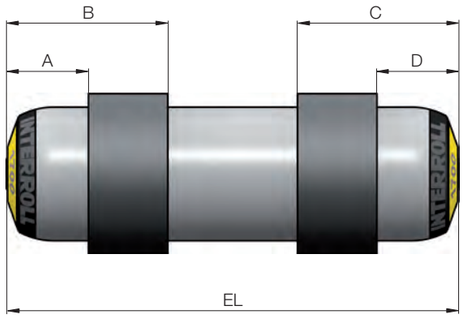

Options

We can offer you the following options in addition to our standard products:

- Antistatic version (standard with conveyor rollers with grooves)
- Other tube materials
  - Aluminium
- Special surface finish for tubes
  - Hardened
  - Brushed stainless steel tubes
- Tube sleeves
  - Flexible PVC sleeve
  - PU sleeve for Ø50 mm
  - Rubber coating
- Other shaft versions
  - Shaftless version
  - Flatted shaft
  - Male threaded shaft
- Lubrication options for ball bearing
  - Oiled
  - Lubricated (standard)