finder
SWITCH TO THE FUTURE

Energy meters

7M
SERIES

- Panels for electrical distribution
- Control panels
- Electrical energy control
- Industrial robots
- Road / tunnel lighting
- Elevators and lifts



FINDER reserves the right to alter characteristics at any time without notice. FINDER assumes no liability for damage to persons or property, caused as a result of the incorrect use or application of its products.

Single-phase Bi-directional energy meter with backlit LCD display

Type 7M.24.8.230.0001
kWh energy meter

- Display of active energy consumption (kWh)
- Active power accuracy Class B according to EN 50470-3
- S0 pulse output for remote energy monitoring according to EN 62053-31
- Sealable tamperproof terminal shield
- Protection category II
- 35 mm rail (EN 60715) mount

NEW **7M.24.8.230.0001**



- Reference current 5 A (40 A Maximum)
- 1-phase 230 V AC
- kWh

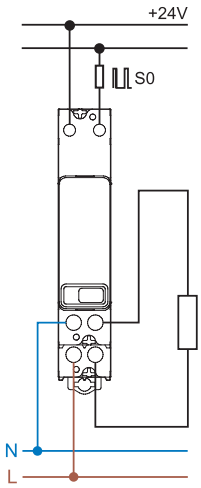

For outline drawing see page 11

Specification		
Reference/Maximum current I_n/I_{max}	A	5/40
Starting current I_{st}	A	0.02
Minimum measured current I_{min}	A	0.25
Current range (within accuracy class)	A	0.5…40
Maximum peak current	A	1200 (10 ms)
Supply (& monitored) voltage U_N	V AC	230
Operating range		(0.8…1.15)U_N
Frequency	Hz	50/60
Power consumption	W/VA	≤ 0.5/10
Display		LCD
Max. totalising count/Min. increment	kWh	999 999.9/0.1
LED pulses per kWh		1000
LED pulse length	ms	4±0.5
Output specification (S0+/S0–)		
Number/Type		1 opto-isolated output
Voltage range/Maximum current (conforming to EN 62053-1)	V DC/mA	3.3…27/1…27
Pulses per kWh	Imp/kWh	1000
Pulse length	ms	32 ± 2
Maximum cable length	m	1000
Technical data		
Accuracy class EN 50470-3 (MID)		B
Ambient temperature (Within accuracy class)	°C	–25…+55
Protective class		II
Protection category: Housing/terminals		IP 50/IP 20
Approvals (according to type)		CE

Single-phase Bi-directional energy meters with backlit LCD display

Type 7M.24.8.230.0010

Type 7M.24.8.230.0110 with IR communication port

Multifunction, MID certified

- Display of total or partial consumption: kWh, kVAh, kvarh
- 2 active energy MID counters + 2 reactive energy nationally certified counters
- 8 resettable counters
- Scroll to view the following instantaneous values: V, A, PF, kW, kVA, kvar, Hz, THD V, THD A, phase angle and direction of power flow
- 7 digit backlit LCD display
- Multifunction touch button
- Active energy accuracy Class B according to EN 50470-3 (MID)
- Reactive energy accuracy Class 2 to EN 62053-23
- S0 pulse output for remote energy monitoring according to EN 62053-31
- Sealable tamperproof terminal shield
- Protection category II
- 35 mm rail (EN 60715) mount

E

NEW 7M.24.8.230.0010



- Reference current 5 A (40 A Maximum)
- 1-phase 230 V 50/60 Hz
- MID certified

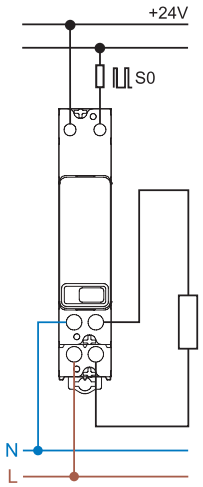

NEW 7M.24.8.230.0110



- Reference current 5 A (40 A Maximum)
- IR communication port
- 1-phase 230 V 50/60 Hz
- MID certified

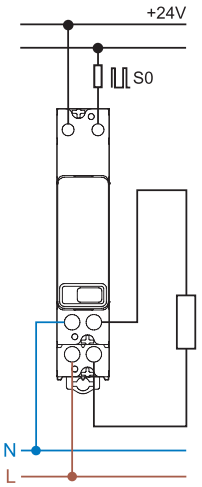

For outline drawing see page 11

Specification			
Reference/Maximum current I_n/I_{max}	A	5/40	5/40
Starting current I_{st}	A	0.02	0.02
Minimum measured current I_{min}	A	0.25	0.25
Current range (within accuracy class)	A	0.5…40	0.5…40
Maximum peak current	A	1200 (10 ms)	1200 (10 ms)
Supply (& monitored) voltage U_N	V AC	230	230
Operating range		(0.8…1.15)U_N	(0.8…1.15)U_N
Frequency	Hz	50/60	50/60
Power consumption	W/VA	≤ -/10	≤ -/10
Display		LCD	LCD
Max. totalising count/Min. increment	kWh	999 999.9/0.1	999 999.9/0.1
LED pulses per kWh		1000	1000
LED pulse length	ms	4±0.5	4±0.5
Output specification (S0+/S0–)			
Number/Type		1 opto-isolated output	1 opto-isolated output
Voltage range/Maximum current (conforming to EN 62053-1)	V DC/mA	3.3…27/1…27	3.3…27/1…27
Pulses per kWh	Imp/kWh	1000	1000
Pulse length	ms	32 ± 2	32 ± 2
Maximum cable length	m	1000	1000
Technical data			
Accuracy class IEC EN 50470-3 / IEC EN 62053-23		1/2	1/2
Ambient temperature (Within accuracy class)	°C	–25…+55	–25…+55
Protective class		II	II
Protection category: Housing/terminals		IP 50/IP 20	IP 50/IP 20
Approvals (according to type)		CE	

III-2021, www.findernet.com

Single-phase Bi-directional energy meters with backlit LCD display

Type 7M.24.8.230.00210
Multifunction energy meter
Bi-directional, MID certified with RS485 Modbus integrated interface and backlit LCD display

Type 7M.24.8.230.0310
Multifunction energy meter
Bi-directional, MID certified with M-Bus integrated interface and backlit LCD display

- Display of total or partial (resettable) consumption: kWh, kVAh, kvarh
- 2 active energy MID counters + 2 reactive energy nationally certified counters
- 8 resettable counters
- Scroll to view the following instantaneous values: V, A, PF, kW, kVA, kvar, Hz, THD V, THD A, phase angle and direction of power flow
- 7 digit backlit LCD display
- Multifunction touch button
- Active energy accuracy Class B according to EN 50470-3 (MID)
- Reactive energy accuracy Class 2 to EN 62053-23
- Sealable tamperproof terminal shield
- Protection category II
- 35 mm rail (EN 60715) mount

* Modbus default transmission baud rate: 19200 bps
M-Bus default transmission baud rate: 2400 bps

NEW **7M.24.8.230.0210**



- Reference current 5 A (40 A Maximum)
- Modbus integrated interface and IR communication port
- 1-phase 230 V 50/60 Hz
- MID certified

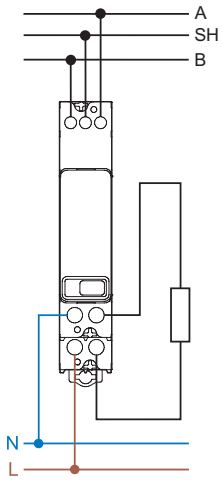

NEW **7M.24.8.230.0310**



- Reference current 5 A (40 A Maximum)
- M-Bus integrated interface and IR communication port
- 1-phase 230 V 50/60 Hz
- MID certified

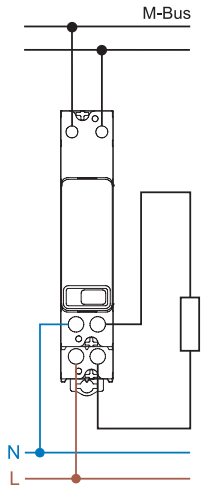

For outline drawing see page 11

Specification			
Reference/Maximum current I_n/I_{max}	A	5/40	5/40
Starting current I_{st}	A	0.02	0.02
Minimum measured current I_{min}	A	0.25	0.25
Current range (within accuracy class)	A	0.5…40	0.5…40
Maximum peak current	A	1200 (10 ms)	1200 (10 ms)
Supply (& monitored) voltage U_N	V AC	230	230
Operating range		$(0.8…1.15)U_N$	$(0.8…1.15)U_N$
Frequency	Hz	50/60	50/60
Power consumption	W/VA	≤ -/10	≤ -/10
Display		LCD	LCD
Max. totalising count/Min. increment	kWh	999 999.9/0.1	999 999.9/0.1
LED pulses per kWh		1000	1000
LED pulse length	ms	4±0.5	4±0.5
Technical data communication protocol			
Bus System		Modbus RS485	M-Bus
Frame		8,N,2	—
Max bus length	m	1000	—
Baud rate*	Baud	1200…115 200	300…9600
Technical data			
Accuracy class IEC EN 50470-3 / IEC EN 62053-23		1/2	1/2
Ambient temperature (Within accuracy class)	°C	–25…+55	–25…+55
Protective class		II	II
Protection category: Housing/terminals		IP 50/IP 20	IP 50/IP 20
Approvals (according to type)		CE	

III-2021, www.findernet.com

Three-phase multi-function Bi-directional energy meters with backlit Matrix LCD display. MID certified for 3 or 4 wire system and single phase application up to 80 A @ 70°C.

Type 7M.38.8.400.0112
Direct connection up to 80 A, dual tariff

- Display of total or partial (resettable) consumption: kWh, kVAh, kvarh
- 2 active energy MID counters + 2 reactive energy nationally certified counters
- 16 resettable counters
- Scroll to view the following instantaneous values: V, A, PF, kW, kVA, kvar, Hz, THD V, THD A, phase angle and direction of power flow
- Matrix backlit LCD display
- Multifunction touch button
- Active energy accuracy Class B according to EN 50470-3 (MID)
- Reactive energy accuracy Class 2 to EN 62053-23
- Sealable tamperproof terminal shield
- Protection category II
- 35 mm rail (EN 60715) mount

NEW **7M.38.8.400.0112**



- Reference current 5 A (80 A Maximum)
- Three phase system 3 or 4 wire or single phase
- Dual S0 outputs and IR communication port
- MID certified up to 70°C

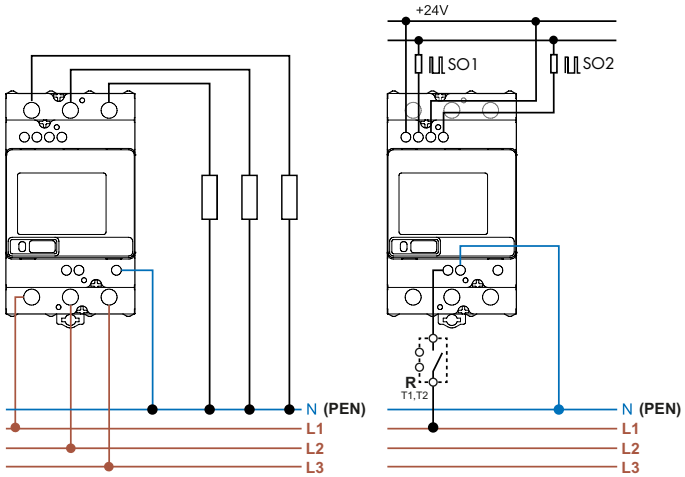

For outline drawing see page 12

Specification		
Reference/Maximum current I_n/I_{max}	A	5/80
Starting current I_{st}	A	0.02
Minimum measured current I_{min}	A	0.25
Current range (within accuracy class)	A	0.5…80
Maximum peak current	A	2400 (10 ms)
Supply (& monitored) voltage U_N	V AC	3 x 230/400
Operating range		(0.8…1.15)U_N
Frequency	Hz	50/60
Power consumption	W/VA	≤ -/8
Display		Matrix - LCD
Max. totalising count/Min. increment	kWh	999 999.9/0.1
LED pulses per kWh		1000
LED pulse length	ms	4±0.5
Output specification (S0+/S0-)		
Number/Type		2 opto-isolated outputs
Voltage range/Maximum current (conforming to EN 62053-1)	VDC/mA	3.3…27/1…27
Pulse per kWh	Imp/kWh	500
Pulse length	ms	32 ± 2
Maximum cable length	m	1000
Technical data		
Accuracy class IEC EN 50470-3 / IEC EN 62053-23		1/2
Ambient temperature (Within accuracy class)	°C	–25…+70
Protective class		II
Protection category: Housing/terminals		IP 50/IP 20
Approvals (according to type)		CE

III-2021, www.findernet.com

Three-phase multi-function Bi-directional energy meters with backlit Matrix LCD display. MID certified for 3 or 4 wire system and single phase application up to 80 A @ 70°C.

Type 7M.38.8.400.0212
Multifunction energy meter with RS485 Modbus integrated interface and and S0 output

- Display of total or partial (resettable) consumption: kWh, kVAh, kvarh
- 2 active energy MID counters + 2 reactive energy nationally certified counters
- 16 resettable counters
- Scroll to view the following instantaneous values: V, A, PF, kW, kVA, kvar, Hz, THD V, THD A, phase angle and direction of power flow
- Matrix backlit LCD display
- Multifunction touch button
- Active energy accuracy Class B according to EN 50470-3 (MID)
- Reactive energy accuracy Class 2 to EN 62053-23
- Sealable tamperproof terminal shield
- Protection category II
- 35 mm rail (EN 60715) mount

* Modbus default transmission baud rate: 19 200 bps

For outline drawing see page 12

NEW **7M.38.8.400.0212**



- Reference current 5 A (80 A Maximum)
- Modbus integrated interface and IR communication port
- 3-phase 230/400 V 50/60 Hz system: 3L+N, 3L, 1L+N
- MID certified up to 70°C

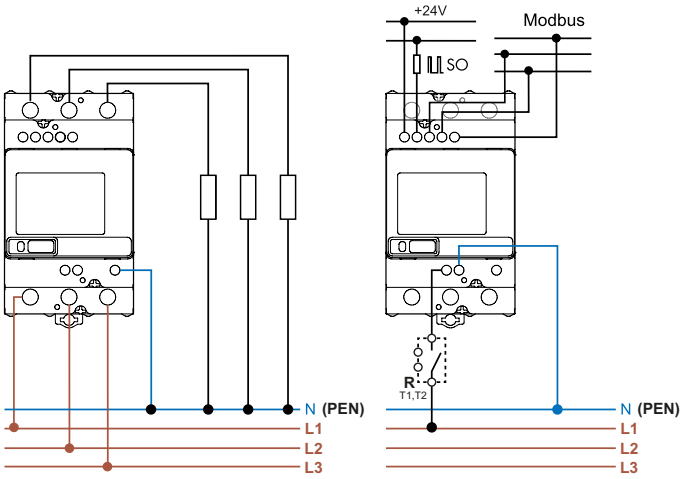

Specification		
Reference/Maximum current I_n/I_{max}	A	5/80
Starting current I_{st}	A	0.02
Minimum measured current I_{min}	A	0.25
Current range (within accuracy class)	A	0.5…80
Maximum peak current	A	2400 (10 ms)
Supply (& monitored) voltage U_N	V AC	3 x 230/400
Operating range		(0.8…1.15)U_N
Frequency	Hz	50/60
Power consumption per phase	W/VA	≤ -/8
Display		Matrix - LCD
Max. totalising count/Min. increment	kWh	999 999.9/0.1
LED pulses per kWh		1000
LED pulse length	ms	4±0.5
Output specification (S0+/S0-)		
Number/Type		1 opto-isolated output
Voltage range/Maximum current (conforming to EN 62053-1)	VDC/mA	3.3…27/1…27
Pulse per kWh	Imp/kWh	500
Pulse length	ms	32 ± 2
Maximum cable length	m	1000
Modbus technical data		
Bus System		Modbus RS485
Frame		8, N, 2
Max bus length	m	1000
Max. Modbus energy meters connectable		32
Baud rate*	Baud	1200…115 200
Technical data		
Accuracy class IEC EN 50470-3 / IEC EN 62053-23		B/2
Ambient temperature (Within accuracy class)	°C	–25…+70
Protective class		II
Protection category: Housing/terminals		IP 50/IP 20
Approvals (according to type)		CE

Three-phase multi-function Bi-directional energy meters with backlit Matrix LCD display. MID certified for 3 or 4 wire system and single phase application up to 80 A @ 70°C.

Type 7M.38.8.400.0312
Multifunction energy meter with M-Bus integrated interface and and S0 output

- Display of total or partial (resettable) consumption: kWh, kVAh, kvarh
- 2 active energy MID counters + 2 reactive energy nationally certified counters
- 16 resettable counters
- Scroll to view the following instantaneous values: V, A, PF, kW, kVA, kvar, Hz, THD V, THD A, phase angle and direction of power flow
- Matrix backlit LCD display
- Multifunction touch button
- Active energy accuracy Class B according to EN 50470-3 (MID)
- Reactive energy accuracy Class 2 to EN 62053-23
- Sealable tamperproof terminal shield
- Protection category II
- 35 mm rail (EN 60715) mount

* M-Bus default transmission baud rate: 2400 bps

NEW **7M.38.8.400.0312**



- Reference current 5 A (80 A Maximum)
- M-Bus integrated interface and IR communication port
- 3-phase 230/400 V 50/60 Hz system: 3L+N, 3L, 1L+N
- MID certified up to 70°C

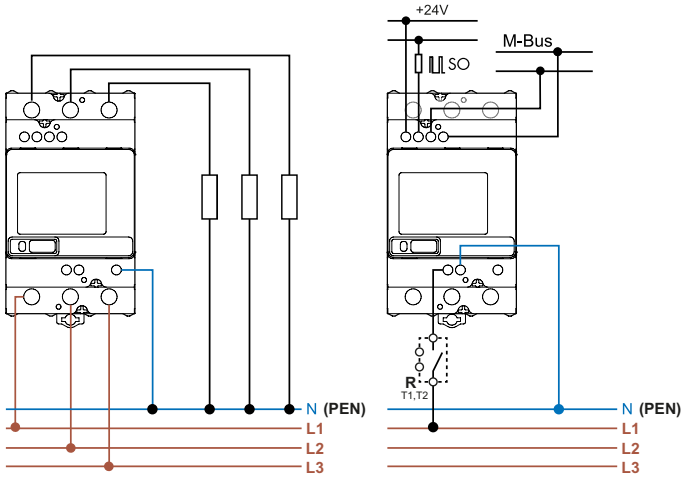

For outline drawing see page 12

Specification		
Reference/Maximum current I_n/I_{max}	A	5/80
Starting current I_{st}	A	0.02
Minimum measured current I_{min}	A	0.25
Current range (within accuracy class)	A	0.5…80
Maximum peak current	A	2400 (10 ms)
Supply (& monitored) voltage U_N	V AC	3 x 230/400
Operating range		(0.8…1.15)U_N
Frequency	Hz	50/60
Power consumption per phase	W/VA	≤ -/8
Display		Matrix - LCD
Max. totalising count/Min. increment	kWh	999 999.9/0.1
LED pulses per kWh		1000
LED pulse length	ms	4±0.5
Output specification (S0+/S0-)		
Number/Type		1 opto-isolated output
Voltage range/Maximum current (conforming to EN 62053-1)	VDC/mA	3.3…27/1…27
Pulse per kWh	Imp/kWh	500
Pulse length	ms	32 ± 2
Maximum cable length	m	1000
M-Bus technical data		
Bus System		M-Bus
Baud rate*	Baud	300…9600
Technical data		
Accuracy class IEC EN 50470-3 / IEC EN 62053-23		B/2
Ambient temperature (Within accuracy class)	°C	–25…+70
Protective class		II
Protection category: Housing/terminals		IP 50/IP 20
Approvals (according to type)		CE

III-2021, www.findernet.com

Ordering information

Example: 3-phase energy meter for current transformer operation (6A/400 V AC), Class B accuracy, for 35 mm rail (EN 60715) mounting, with integral sealable tamperproof terminal shield.

7 M . 2 4 . 8 . 2 3 0 . 0 0 0 1

Series

Type
2 = 1-phase, backlit display

Current
4 = 40 A

Supply version
8 = AC

Special version
0 = Standard

Option
0 = S0 pulse output
1 = IR comms. (3x) port + S0 pulse output
2 = RS485 Modbus integrated interface + IR comms. (3x) port
3 = M-Bus integrated interface + IR comms. (3x) port

Supply voltage
230 = 230 V

Special version
0 = Single tariff
1 = kWh only (0001)

Version
1 = Conforms to MID directive

Available versions
7M.24.8.230.0001
7M.24.8.230.0010
7M.24.8.230.0110
7M.24.8.230.0210
7M.24.8.230.0310

Example: 3-phase energy meter for direct connection up to 80 A, with MID certification, Class B accuracy, for 35 mm rail (EN 60715) mounting.

7 M . 3 8 . 8 . 4 0 0 . 0 1 1 2

Series

Function
3 = 3-phase, backlit display, direct connection

Current
8 = 80 A

Supply version
8 = AC 50/60 Hz

Special version
0 = Standard

Option
1 = Infra-red comms. port + two SO pulse outputs
2 = RS485 Modbus integrated interface + SO pulse output + IR comm. port
3 = M-Bus integrated interface + SO pulse output + IR comm. port

Supply voltage
400 = 3 x 230/400 V AC 50/60 Hz

Special version
2 = Dual tariff

Version
1 = Conforms to MID directive

Available versions
7M.38.8.400.0112
7M.38.8.400.0212
7M.38.8.400.0312

Technical data

Supply terminals		**7M.24.8.230.0xxx**		**7M.38.8.400.0xxx**	
Max. wire size		solid cable	stranded cable	solid cable	stranded cable
	mm^2	—	1.5…10	16	25
	AWG	—	—	—	—
Screw torque for I_{max}	Nm	1.5	0.8 PZ2	3.5 PH2	3.5 PH2
SO+/SO– terminals, RS485 Modbus, M-Bus		**7M.24.8.230.0xxx**		**7M.38.8.400.0xxx**	
Max. wire size		solid cable	stranded cable	solid cable	stranded cable
	mm^2	—	0.05…1	—	0.5…1.5
	AWG	—	—	—	—
Screw torque	Nm	—	0.6	—	0.6

Wiring diagrams

Three-phase system

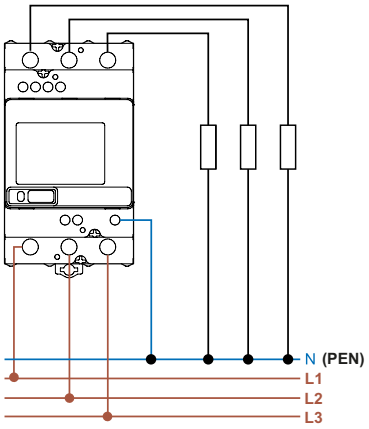

Type 7M.38.8.400.0112

Single-phase system

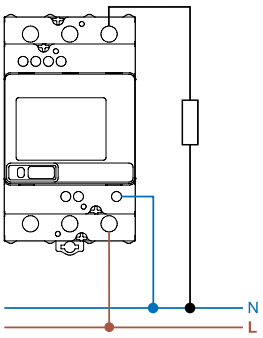

Type 7M.38.8.400.0112

Modbus or Mbus system

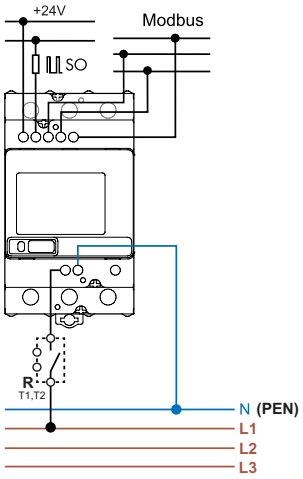

Type 7M.38.8.400.0212

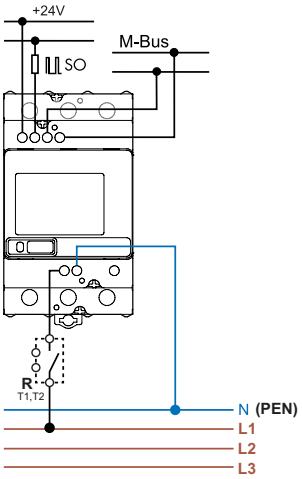

Type 7M.38.8.400.02312

E

III-2021, www.findernet.com

Outline drawings

Type 7M.24.8.230.0001

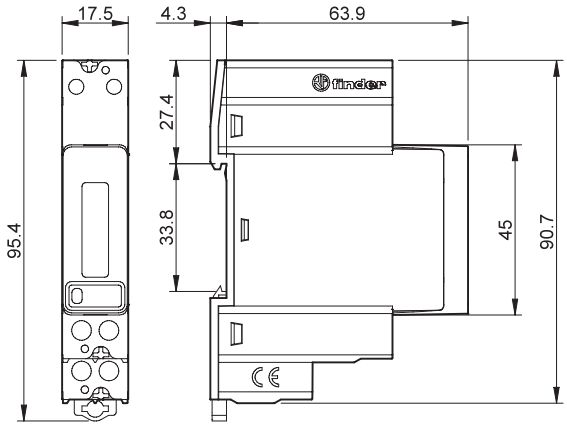

Type 7M.24.8.230.0010

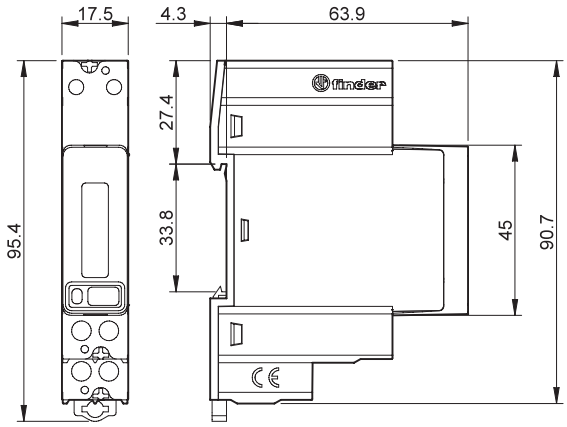

Type 7M.24.8.230.0110

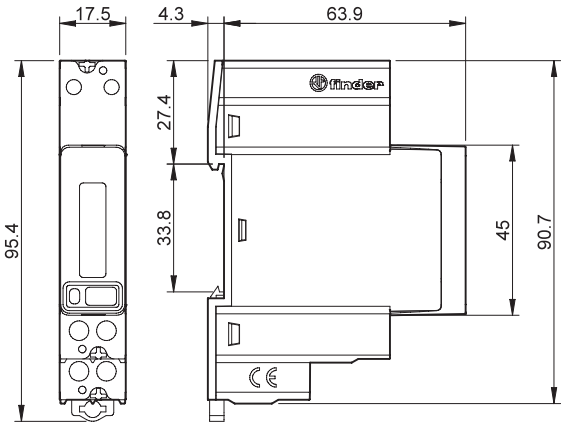

Type 7M.24.8.230.0210

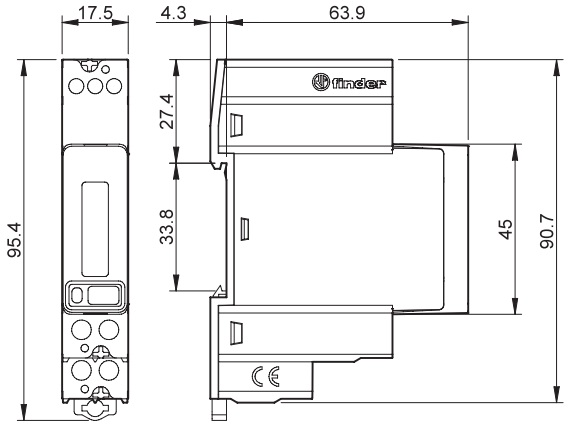

Type 7M.24.8.230.0310

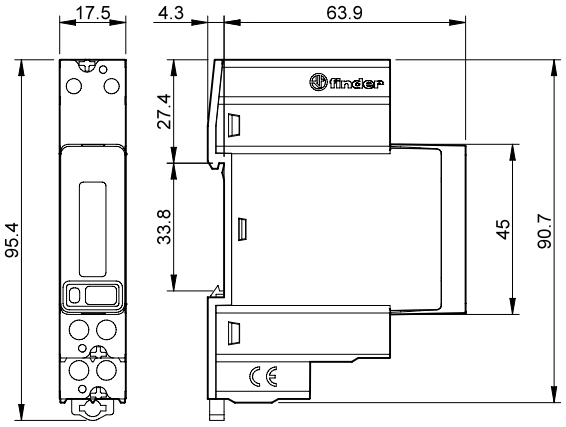

E

Outline drawings

Type 7M.38.8.400.0112

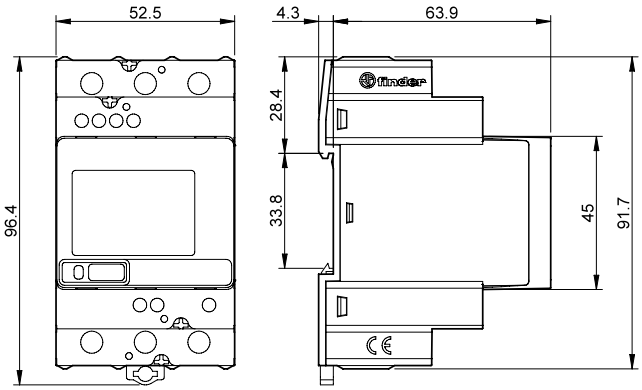

Type 7M.38.8.400.0212

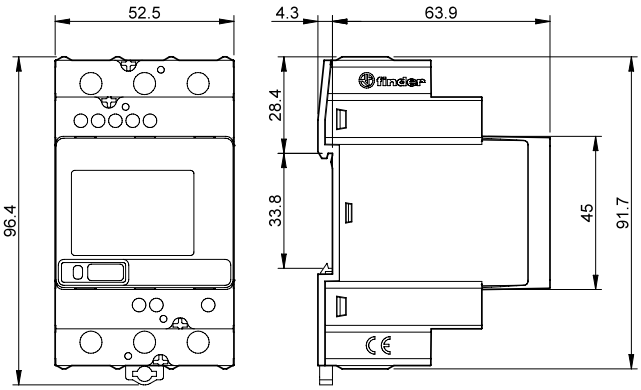

Type 7M.38.8.400.0312

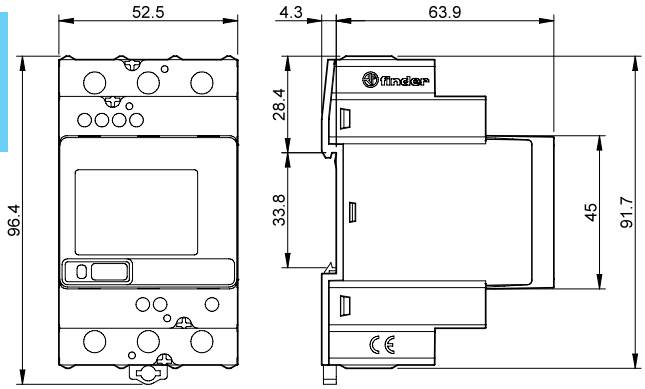

E

III-2021, www.findernet.com