Bourdon Tube Pressure Gauges, Stainless Steel
Type 131.11
Item no.: 48689065

Description	
Design	EN 837-1
Nominal size	050 mm
Accuracy class	class 2.5
Scale range	0...6 bar
Unit of outer Scale	bar
2nd Scale or Special Scale	2nd scale psi
Process connection	G 1/4 B
Connector location	lower mount
Materials	
Material pressure element	Measuring System 316 SS
Movement	stainless steel
Dial	Aluminum, white
Pointer	aluminium, black
Case material	Stainless steel 1.4301
Window	polycarbonate
Operating conditions	
Permissible ambient temperature	-40 ... +60 °C
Ingress protection	IP 54

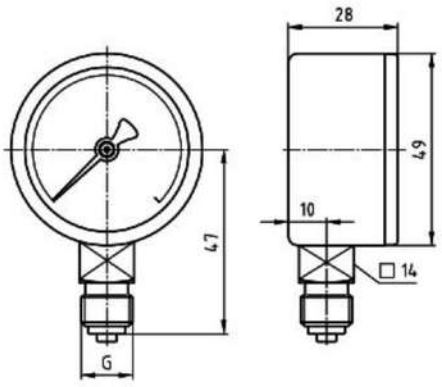

WIKA Instruments – 38 Avenue du Gros Chêne – 95220 HERBLAY
Phone0 820 95 10 10
info_fr@wika.com • http://www.wika.fr